PRACTICAL RELIGION IN JAPAN :

A Study of two urban neighbourhoods

Volume I

David C. Lewis

A thesis submitted to the University of Manchester for the degree of Doctor of Philosophy in the Faculty of Economic and Social Studies, Department of Social Anthropology.

1984

To Ruth

whose contribution to this research
is unquantifiable.

THE UNIVERSITY OF MANCHESTER

ABSTRACT OF THESIS submitted by David C. Lewis

for the Degree of Ph.D. and entitled

Practical Religion in Japan:

A study of two urban neighbourhoods

Date of submission 19th October 1984

Despite a plethora of studies on the texts and sects of Buddhism or Shinto, and despite numerous statistical surveys, still relatively little is known about the attitudes of ordinary Japanese men and women towards their religious experiences. The present research uses anthropological techniques of participant - observation and in - depth interviews to probe deeper than the levels of texts, sects or statistics to reveal underlying attitudes, which in turn shed light on issues such as the relationship between belief and practice. Two periods of fieldwork were conducted in two adjacent neighbourhoods of a Japanese city, one of these areas consisting of company housing belonging to a large factory in the immediate vicinity. It is on the basis of such data that a theoretical framework has been adopted which focuses on four basic themes which permeate many facets of Japanese life, both religious and non-religious.

Japanese religious behaviour manifests itself in a myriad of forms, but all these are manifestations of a few basic 'motivations' or concerns. The present work highlights four such 'key themes' in Japanese religion, namely 'memory', 'age', 'purity and pollution' and 'safety and security'. Through many permutations and by various 'transformations' these basic concerns or 'motivations' are manifested in observable behaviour. Five influences upon the expression of these four basic motivations are highlighted, these being birth order, house ownership, experiences of illness, male and female roles and the use of leisure time. These various aspects of religiosity are then manifested in a variety of ways in the experiences of corporate institutions and of individuals, as illustrated by a detailed case study of religious rites in a Japanese factory and by profiles of a number of individuals.

See Notes on reverse

I certify that no portion of the work contained in this thesis has been submitted in support of an application for another degree or qualification at this or any other university or other institution of learning.

Statement of candidate's education and research experience

May 1979	B.A. in Social Anthropology, The University of Cambridge.
October 1980	M.A.(Econ.) by thesis, Department of Social Anthropology, The University of Manchester.
October 1980 onwards	Ph.D. candidate, Department of Social Anthropology, The University of Manchester.
April 1981-March 1982	'Visiting Researcher', Department of Cultural Anthropology, College of Liberal Arts and Sciences, The University of Kyoto.
September 1983-May 1984	'Visiting Fellow', National Museum of Ethnology, Ōsaka.
October 1984-September 1985	'Project Assistant', Department of Theology and Religious Studies, The University of Leeds.

Typographical Note

Owing to the length of the thesis, and a variety of circumstances affecting the typists and their typewriters it has been necessary to have the thesis typed by a total of nine different typists. While every effort has been made to obtain consistency of format, this has not always been possible and has resulted in a certain variation between different chapters.

Contents

PREFACE

THE ANTHROPOLOGIST

"How can you study religion as an anthropologist and at the same time be a committed Christian?" is a question I have sometimes been asked by my anthropologist friends. One of the presuppositions behind such a question is that my own religious faith not only exerts some influence upon my perception of my chosen field of study but also influences it in such a way as to make my findings less 'objective' than those of others who do not profess a faith in any kind of religion for themselves. Since my faith obviously does have some influence upon my views of religion, and therefore that is a relevant fact with which the reader should be acquainted in order to assess or interpret the material to be presented in the present work, it is necessary at the outset to make clear why I regard my own religious faith as a definite advantage rather than a disadvantage in my anthropological study of religion.

Anthropologists strive for objectivity, but can rarely, if ever, break free from the fetters of subjectivity. Incrasingly it is becoming recognised in anthropological circles that the researcher's own background, theoretical bias, temperament and experiences of fieldwork can channel his or her thinking along certain paths, predispose him or her to particular methodologies and to some extent influence conclusions. (cf. Platt 1976: 113-122; Bennett 1948; Nadel's comments in Tax et al. 1953: 335-7; Evans-Pritchard 1951: 83-5; Honigmann 1976: 390-394). This does not mean that anthropology is to be abandoned because of its being inextricably enmeshed in some degree of subjectivity, but rather the anthropologist needs to recognise the limits of the observer's subjective influences and to seek to disentangle these from objective observations, a process which might

never be achieved completely but which is the aim of the anthropologist who at present sees 'through a glass darkly' only partially and fragmentally that which he or she hopes to view in its entirety[1]. Southwold's comments on this may be quoted at some length, as they elucidate concisely this relationship between objectivity and subjectivity.

> 'We do think of ourselves as scientists, objectively observing and analysing the data, and we are right to do so, lest we lapse from standards of honesty and objectivity, rigour and open-mindedness. But the ideal of Science . . . is not to be embraced too literally and exclusively. We seek to be scientists, but we are also men among men, both in conducting research and in what we make of it. We study by participant observation . . . and our principal instrument of enquiry is ourselves, as human persons relating to others. In consequence, what we produce is bounded by our personal limitations; it had better be enriched by our personal assets, which extend far beyond what gifts we may have as scientists in the ordinary sense'.
>
> (Southwold 1983: 8)

These comments apply most especially to qualitative data of the type involved in studies of 'ideologies', whether political or religious, but some subjective element may still be involved in more quantitative studies, in economic anthropology for example, since data on size of fields or field ownership, for instance, can be interpreted through a 'Marxist' or a 'Liberal' framework of analysis. It is even more difficult to perceive cultural bias or ethnocentric tendencies when one thinks that one is 'objective' because one is not committed to a particular ideology such as Marxism. Such an anthropologist is nevertheless caught up in a system of ideas and values which may or may not be amenable to categorisation

---

(1) The reference is of course to 1 Corinthians 13: 12 in the Authorised version.

and may or may not be internally consistent. This 'non-ideology' is in effect an 'ideology' in itself, if 'ideology' is taken as constituting a 'cultural system' (cf. Geertz 1973: 193-233) in which many socially normative values, attitudes, ideals, motivations and perhaps even emotions are caught up and expressed in socially conditioned forms which, being so much a part of the culture as the 'cultural air' breathed in by all, are less obvious to the participants themselves. It is when one steps out of this 'non-ideology' into another ideological system that one becomes an 'outsider' who, like an anthropologist in a different culture, is more aware of the values and attitudes which are different or contrasting even while the similarities are still often overlooked.

Often the person who steps out of the morass of ideas which constitute the 'non-ideology' of a society and embraces a variant value system (which is labelled an 'ideology') then becomes critical, or more critical, of some aspects of the society or social values which had been rejected in the process of adopting that ideology(2). A similar process does not necessarily take place when the anthropologist enters another culture, but in both cases there may be oscillating positive and negative feelings towards the new culture or ideology, or aspects of them. There may be a 'tourist' stage of positive attitudes, followed by doubts or difficulties producing negative attitudes, but these are usually resolved in a final stage of adaptation to the culture whereby the newcomer has learnt to live in the new environment, appreciating the positive aspects and perhaps

---

(2) This is assuming that the person remains committed to the ideology, or at least some version of it. Of course there are those who also become disillusioned with the ideology and may return to the set of values they had previously rejected.

remaining critical of the negative facets of the new environment[3].

This is one of the reasons why Moeran's (n.d.) characterisation of anthropologists' views on Japanese society as either 'positive' or 'negative' appears to be rather superficial, in that most anthropologists end up with a mixture of such attitudes and would find it very difficult to say if they had overall 'positive' or 'negative' views. One can be impressed by technological achievements in the economic sphere but remain critical of family patterns such as the apparent lack of a husband or father role on the part of many businessmen - a social cost of the technological success. Such criticism is not necessarily to be branded as 'ethnocentric', but it does remain a value judgement which the anthropologist is required by conventional 'liberal' standards[4] to avoid in academic writings (cf. the discussion in Tax et al. 1953: 336-8 and 340). This distinction between ethnocentrism and value judgements is clearer in the case of Marxism, which has generated a considerable body of academic literature which might be labelled as 'ethnocentric' simply because it is committed to an ideological position which not everyone shares (taking

---

(3) There are other paths which might be taken too, such as seeking the refuge of a foreign ghetto while continuing to live in the other country, sharing and perpetrating 'negative' or biased views with others in the ghetto. An ideological counterpart of this behaviour is sect formation. Southwold (1983: 91) suggests that a person stays converted to a religion to the extent that he or she finds association with other converts gratifying and deconverts if he or she 'wishes to be dissociated from its adherents and/or associated with its non-adherents'. A third possibility is for a person to remain committed to certain teachings, principles or pattern of behaviour, but if for some reason finds these to be incompatible with those in the same group may form a splinter group or else leave to join another sect.

(4) 'Liberal' is here used in the sense of academic standards which avoid ethnocentrism by bending over backwards to avoid any obvious value judgements in one's writings.

'ethnocentric' to include one's ideology as well as one's culture or society[5]), but at the same time Marxism does involve value judgements about the nature of society itself (e.g. Socialism being 'better' than Capitalism etc.). Nevertheless, there is a general acknowledgement that the Marxist has a right to his or her own views which can be expressed in academic papers using Marxist jargon as long as the implicit value judgements which may lie within that theoretical framework are not made explicit, because they are then labelled 'value judgements'. Put in this form it appears to be virtually intellectual dishonesty to be committed to an ideology but not to make plain the implications of that ideology for one's own subject matter.

To a considerable extent this is recognised by anthropologists, but it seems as if many still assume that if they are not committed to a specific ideology then they are not open to the charge of being 'ethnocentric' in their writings. To hold an ideology is to put oneself out on a limb, so the academic writings of the 'liberal' majority are not recognised as implicitly 'ethnocentric' in so far as they do incorporate value judgements which are not even recognised as such by the anthropologist when writing about another people[6]. It is very difficult to assess the extent to which an anthropologist's own experiences of marriage or family life influence his or her writings on kinship and marriage, or the degree to which an anthropologist's own economic circumstances affect his or her interests in economic anthropology and choice of subject matter. Perhaps

---

(5) The strict etymology of 'ethnocentric' comes from ethnos, a tribe or people, but American, French, German and British anthropologists might all be 'ideologically ethnocentric' in similar ways.

(6) See in this regard the controversy between Strathern and Hallpike in the correspondence sections of 'Man' (Vol. 13: 150-1, 477; Vol. 14: 354) and Reading's comments on it (Vol. 14: 164-5), all under the title of 'accuracy, tact and honesty'.

these problems are not so difficult in the sphere of politics if the researcher is candid about his or her own political leanings, and the issue is even clearer in the case of Marxists who have an ideology which, despite its many variant schools, may provide an internally consistent framework by reference to which the researcher can recognise potential biases in his or her work conditioned by the ideological framework. The very fact that it is a relatively coherent system allows for demarcation between those areas which may be influenced by the ideology and those which are probably not, although the very nature of such ideologies does predispose to an all-inclusive world view embracing many different facets of experience. Even so, the Marxist writing about religion is more easily able to recognise bias if he or she finds that the conclusions are veering towards a Marxist view of religion, whereas a non-Marxist who is supposedly ideologically neutral may not recognise bias if the writings make some assumptions which are not actually warranted by the data or by scientific methodology, such as assuming there is no level of reality beyond what our normal experience reveals[7].

In fact, many anthropologists are probably prepared to believe in the reality of super-normal phenomena such as fire-walking and a range of other phenomena listed by Burridge (1969: 4, footnote 2), who points out a rather loosely organised morass of 'beliefs' which are probably held at least in part by many anthropologists[8]. Some may 'believe' in

---

(7) In practice, people do believe in such a level of reality beyond normal sensory experience when they speak of sub-atomic particles or recognise they are travelling at 19 miles per second around the sun.

(8) His actual words are: - Not to 'believe in' phenomena such as trances, stigmata, possession, levitation, walking on hot coals without being burned or skewering the cheeks without leaving a wound - which are all above or beyond the natural, not found in nature - is surely equivalent to being a 'flat-earther' (Burridge 1969: 4, footnote 2).

fire-walking, or at least not reject the possibility that ther might be 'something in it'[9], while others may 'believe' that acupuncture or other kinds of alternative medicine[10] actually 'work' even though they know that orthodox 'Western' or 'cosmopolitan' medical knowledge is unable to provide any explanation or rationalisation for the various points for inserting needles used in acupuncture (cf. Lock 1980: 65). Given this range of potential beliefs in the 'super-normal', any anthropologist writing about religion who considers that some of these phenomena may have 'something in them' is open to the accusation of being labelled 'unscientific' by his colleagues if such beliefs are publicised, whereas most of those same colleagues may have other kinds of fragmented beliefs regarding other areas of the 'super-normal'[11]. Many, however, are not willing to assert that they fully 'believe' in these things, but neither are they willing to deny a 'belief': instead they have to admit to a "Don't know" attitude which is open to the possibility that there "might be something in it". Nevertheless, it is probably still true that when it comes to a more formalised religious system such as Christianity 'the majority of anthropologists are indifferent, if not hostile, to religion - atheists, agnostics or just nothing' (Evans-Pritchard 1962: 45). However, any perception of another religion, by the very nature of the topic, involves a certain degree of 'qualitative' rather than 'quantitative' assessment of the participants' motivations, moods, values and attitudes,

---

(9) Carmen Blacker, a Japanologist but not strictly an anthropologist, is one who seems to think this (cf. Blacker 1975: 251).

(10) One Western anthropologist studying Japanese society found that shiatsu (a kind of pressure-point massage) seemed to 'work' and his wife took classes in it.

(11) 'Belief' is here used in an admittedly loose and not yet defined manner. It will be discussed further in chapter one, but a rigorous discussion of the concept is not really necessary in the present context.

the interpretation of which is undoubtedly invluenced to some extent by the anthropologist's own subjective experience. If the anthropologist is unable to demarcate those areas of his or her 'beliefs' which may have bearing upon the analysis, or, even more, is unable to distinguish what is believed from what is not, then any account of the religious behaviour or beliefs studied is influenced to an indeterminate degree by the author's own morass of half-formed, inchoate beliefs and attitudes. The only solution to this is the imperfect one of trying to be as candid as possible about one's own prejudices, feelings and attitudes towards the subject matter, a solution recently adopted by Southwold (1983: 9-10).

Southwold goes even further than this, however, in stating that it can be an advantage for the anthropologist to include rather than exclude personal feelings and impressions. His comments are worth quoting in full:

> ' . . . I have freely resorted to value judgements of people and their conduct, have attached weight to my own subjective impressions and feelings, and have drawn upon my own religious experiences . . . : all of which social scientists as a rule sedulously avoid. So long as I tried to exclude my personal feelings and assessments from my intellectual analysis I was divided against myself and unable to proceed: this book emerged as an integration of what I had striven to keep apart. An anthropologist is a man - and a woman - and if he strives to be less than a man he defeats his anthropology. This, at least, is surely true when the topic is religion: was it not always absurd to expect to understand religion by excluding value judgements, emotions, and personal experience, which are of its essence? I am indeed a flawed instrument; but so long as I strove to be a narrow social scientist I was maimed as well.'
>
> (Southwold 1983: 8)

Later in his book, Southwold quotes Evans-Pritchard's view of the advantages gained by an investigator into other religions who already holds a religious belief of his or her own. Evans-Pritchard writes that he agrees with the view of Schmidt, whom he quotes as writing

> 'If religion is essentially of the inner life, it follows that it can be truly grasped only from within. But beyond a doubt, this can be better done by one in whose inward consciousness an expression of religion plays a part. There is but too much danger that the other [the non-believer] will talk of religion as a blind man might of colours, or one totally devoid of ear, of a beautiful musical composition'
> (Evans-Pritchard 1965: 121, quoting Schmidt 1931:6, and cited by Southwold 1983: 61).

It is therefore an advantage to hold a religious faith when investigating religion, for at least two reasons:

1) One can more clearly demarcate the sphere of one's own inner biases because the ideology provides a comprehensive frame of reference and a more cohesive, internally structured view of the world than that held by those anthropologists (perhaps the majority) who outwardly deny having any religious beliefs but who inwardly do not know what they believe about 'super-normal' phenomena such as fire-walking or acupuncture, let alone what they think about questions such as the nature of any afterlife or of any spiritual world. Knowing what one believes about such matters is an advantage in distinguishing more clearly the areas of potential personal bias which might not even be recognised at all in themselves by the majority of anthropologists.

2) Religious experience on the part of the anthropologist affords a deeper insight into the religious experiences of others, thereby reducing the danger that the anthropologist is like a blind man describing colours[12].

Southwold (1983: 62) suggests that a full description and analysis of ritual acts may become like the account of an observer 'totally devoid of ear' who 'described a symphony concert in terms of the hammerings and frottings of the performers, and the gymnastics of the conductor'. Such accounts and analyses of ritual I sometimes find to be rather uninspiring and, quite frankly, boring. For this reason I have attempted to delve further into the motivations, attitudes, feelings and professed beliefs of the participants themselves instead of trying to analyse rituals. The one exception is the extended ethnographic account of religious rites at a Japanese factory given in chapter 12, largely because such rites have been hitherto neglected in most ethnographies of Japan; even this, however, is more description than a detailed analysis of ritual as such, culminating in an analysis focussed more on the attitudes and professed beliefs of the actors themselves. In other chapters some description of religious practices has also been necessary in order to set out the kinds of practices concerning which attitudes and professed beliefs are then elucidated, but the principal aim of the present work is to probe deeper than the wealth of statistics on Japanese religious practices, deeper also than the few insights obtainable from analyses of ritual, and to uncover some of the less obvious motivations behind these practices - motivations which ultimately give the practices 'meaning' as far

---

(12) One is reminded of Weber's self-evaluation that he was 'religiously unmusical' (quoted by Gerth and Mills 1957: 25; cf. also the reference to 'religious indifference' on p. 5).

as the participants themselves are concerned.

In doing this, it has been an advantage for me to have certain religious convictions of my own, in terms of the two theoretical issues mentioned above, but there is also the question of the observer's effect on the observed, the extent to which informants might give replies in accordance with what they think the researcher expects them to reply and the degree to which the very presence of a researcher may create behavioural responses which are not 'typical' of ordinary behaviour at other times (cf. Schwartz and Schwartz 1969: 94 ff.). Recently Ohnuki-Tierney (1984, chapter 1) has commented on how the response to a foreign anthropologist (in probably all cultures) is normally an interaction between observer and observed which produces a 'negotiated' interpretation of reality on the part of both the researcher and the researched. Therefore anthropologists have always had to work with a social equivalent of Heisenberg's 'Uncertainty Principle' in the physical sciences, whereby the very fact that there is an observer trying to conduct research on a particular topic is in itself an influence upon what results can be obtained. Even if anthropologists try to minimise this effect as much as possible, it still remains an unknown factor in their results. This may seem to some a reason why those holding a personal faith or ideology might be unable to perceive the influence of that ideology upon the way people respond to their questions or behave in their presence. However, the same problem applies to all anthropologists regardless of their ideologies or personalities and not only to those holding an ideology. Rather, those with an ideology may be better able to notice where their own beliefs seem to be colouring the replies of those who respond to their questions. In the course of my fieldwork I noticed this happen twice. Once was when a man who had initially said that he thought his prayers at the factory had no effect at all later said perhaps they had "a little" effect, in the

meantime having asked the anthropologist his views on whether the prayers of Christians are answered. The other occasion was when a Roman Catholic woman said during the interview that one of her reasons for a belief in God was because of the evidence for the Resurrection of Christ, a view also held by the anthropologist. Even this, however, might not be attributable to the anthropologist's influence because I had not discussed such matters with the woman before, though it is possible she had heard something about the anthropologist's views through a neighbour. Whether she was influenced or not, this reply was not her principal answer and it is not unlikely to have come from the lips of a Roman Catholic.

I am confident, however, that the vast majority of my informants knew nothing at all about my religious views when they expressed theirs. Firstly, they had filled in a questionnaire distributed in the one area by the neighbourhood council on my behalf, the members of which, as far as I am aware, did not know anything about my own beliefs, and in the other area was distributed by the anthropologist personally, but in subsequent interviews it became clear that often they had not realised I even lived in the same area, and that they knew virtually nothing at all about me. Sometimes at the end of an interview they would ask a few questions about my own beliefs, but by that time they had already expressed their own attitudes and views. Since the interviews were conducted in widely scattered households, relatively few of which had close contacts, if at all, with other households selected for interview, it is highly unlikely that the fragments of information given to a few would have had any influence at all on others interviewed. This is particularly so when their perception of Europeans as 'Christians' without distinction (except some knowledge of the fact that there are Catholics and Protestants) makes them expect, or at least not be surprised, to find that a foreigner

calls himself a Christian. Therefore I doubt very much that my Christian faith could have had any significant influence at all upon the kinds of results obtained - in spite of the social 'Uncertainty Principle' which confronts all anthropologists. Conversely, one might speculate on whether or not the attitudes of anthropologists who may be known to be atheists or to be religiously indifferent in terms of a personal faith might even inhibit the expression of religious ideas among those who are being studied: if so, the anthropologist who is personally sympathetic to 'religion' may learn more about a people's religious life than those whose attitudes are perceived differently, no matter how carefully the anthropologist may seek to remain 'neutral' in a situation (cf. Burgess 1984: 84, 157).

My Christian faith also gives me an interest in Japanese Christianity, and to comment on the behaviour of the Christians in my fieldwork area just as I point out the religious behaviour of other minority groups such as the Sōka Gakkai (a militant Buddhist 'new religion'). The number of 'Christians' in the sample was in fact larger than that of any other minority group, so more attention may have been paid to the Christians in some passages. While I agree with Southwold (1979: 641) that 'private and idiosyncratic symbols . . . should not have a large place in ethnographic reports', I also hold that an ethnographic account should not dwell so much on the majority that minority interests are forgotten, whether that minority be Christian, Sōka Gakkai or whatever. This is particularly relevant to Japan, where there is such a diversity of religious practices on the surface that the 'minority' cults constitute important and often significant elements in the overall jigsaw. An understanding of the whole picture is not complete without including every piece, and, as in a jigsaw, one can not say that one piece is intrinsically 'more important' than another.

However, my own Christian convictions do lead me to become perhaps over-critical of the kind of Christianity I encountered in Japan, and these criticisms have been expressed in certain places in the following chapters. Firstly, I found in the survey of two urban neighbourhoods that several called themselves Christians for one reason or another, a few even going regularly to a church, but almost all of them practised what I view as antithetical to 'true' Christianity - involving 'compromises' with Shinto or Buddhism such as the performance of rites as if to the ancestors in a way indistinguishable from Japanese Buddhists, visits to Shinto shrines for child dedication ceremonies, possession of Shinto safety charms and so on. Secondly, I found that the worship at several churches I attended was rather dry and formal in contrast to that of another local church, and I tend to conclude that the relatively slow growth of Christianity in Japan, as compared with that of many of the Buddhist 'new religions', is largely attributable to these forms of worship and some of the institutionalised arrangements in these churches which I do not regard as having any theological precedent or basis in the New-Testament. Perhaps it is a tendency to become more critical of failings perceived in those people or institutions nearest to one's own heart which leads me to express such criticisms at greater length than I might otherwise.

PART I

INTRODUCTION

CHAPTER 1

INTRODUCTION

'Practical' versus 'philosophical' religion

According to Leach (1968: 1), 'in the religious sphere, the gap between the theology of the higher philosophers . . . and the religious principles which guide the behaviour of an ordinary churchgoer may be very wide indeed'. The 'widespread failure' to distinguish between what he calls 'practical' religion and 'philosophical' religion has led to misunderstandings about the nature of religious behaviour: taking Buddhism as an example, Leach asserts that those whose understanding has been derived almost exclusively from studies of the Pali texts or professional Buddhist theologians have often supposed that this is the only 'pure' form of the religion, any practices not corresponding to this being relegated to the miscellaneous category of 'survivals' of 'animistic and Hindu superstitions' (ibid.). Some of the papers in Leach's book sought to rectify the fact that 'very little attention has been paid to the ordinary practice of Buddhism . . . in Ceylon, Burma, Thailand or elsewhere' and it is my purpose to pursue this in the Japanese context.

Studies on Japanese religion at present available in the English language tend to fall into three principal categories, namely:

a) Books on the texts and sects of Buddhism or Shinto, often adopting an historical framework. Included among many examples which could be cited are the books by Anesaki (1963), Kitagawa (1966), Holtom (1983), Steinilber-Oberlin (1938), Saunders (1964) and Earhart (1974).

b) Sociological or anthropological studies of religious groups, focussing especially on the 'new religions'. Examples include Morioka (1975), McFarland (1967), Davis (1980), White (1970), Dale (1975) and Offner and Van Straelen (1963).

c) Studies of religion in rural areas, including the chapters on religion in ethnographies such as those by Embree (1946), Smith (1956 and 1978) or Beardsley, Hall and Ward (1959). Works dealing more specifically with rural religion include those by Blacker (1975), Yanagita (1970), Ooms (1967 and 1976), Hori (1968 and 1975), Earhart (1970), Czaja (1974) and Akaike (1981), plus studies of Okinawan religion or other peripheral areas, examples of which include Lebra (1966), Robinson (1969), Matsuzono (1976) and Mabuchi (1976). Many studies in Japanese also deal with rural areas, as indicated by Morioka's 'Integrated Bibliography' of publications in the sociology of religion in Japan (1975: 185-221)[1].

Therefore studies on the religious practices of ordinary men and women in urban areas (which are more representative of modern Japan than are rural areas) are relatively few. More particularly, there is a dearth of studies on 'practical' religion in Japan, three principal exceptions being the books by Smith (1974), Basabe (1968) and Dore (1958).

However, even these three studies have serious limitations and do not provide any fully comprehensive study of religious practices in urban areas. Smith's study is confined to the ancestral cult as practised by those possessing Buddhist household altars (Butsudan) and neglects less obvious aspects of the ancestral cult such as (a) the use of mortuary plaques (ihai) or photographs of the departed as substitute altars before

---

(1) This brief bibliographical summary is intended to provide examples of the principal categories of books on Japanese religion and is by no means comprehensive. One book which falls outside these categories is that by Spae (1971), which deals with 'Japanese religiosity' in terms of categories such as 'emotions', 'emotional attitudes', 'social attitudes', 'estheticism' and 'intuition'. Although making reference to various sociological surveys, Spae's approach is in terms of these more abstract feelings or moods which, he says, convey the religiosity of Japan. This approach will be discussed more fully in a later section.

which offerings and prayers are made, (b) the practice of performing ancestral rites when visiting the house of a parent or sibling who possesses the family's Butsudan by those who do not have one themselves or (c) the keeping of ihai in a Shinto god-shelf (Kamidana) and performing ancestral rites there instead of at a Butsudan, as found among some families. Even ancestral worship at graves is mentioned relatively briefly in Smith's account and is not analysed in any depth.

Both Smith and Basabe neglect completely other important aspects of Japanese religion in urban areas, such as those connected with fortune-telling, 'calamitous years' (yakudoshi) - certain ages in the life cycle when one is thought to be particularly susceptible to illness or misfortune unless special rites are performed - or the use of 'direction lore' in the construction of houses, especially the attention paid to 'devil doors' (kimon) to the north-east and south-west. Basabe does provide useful statistics on a number of beliefs and practices, especially those relating to beliefs in an afterlife and to the ancestor cult, as well as reference to practices such as the possession of safety charms (mamori). His work is limited by the exclusion of practices such as those mentioned above (and others detailed later) and also to some extent by his classification of his sample into 3 groups - 'believers', 'non-believers' and an indifferent group. Not only is the assignation of religious labels a very difficult procedure in Japan - as Basabe himself recognises (1968: 5-10) - but also religious practices and attitudes are not necessarily static but can increase or change during a person's lifetime as he or she becomes responsible for the family ancestral cult, buys a house, reaches the age of a major yakudoshi or becomes seriously ill. (Serious illness can sometimes lead people to consult mediums, buy a Shinto god-shelf or visit certain temples or shrines more frequently.)

Dore's chapters on religion provide a more comprehensive study of urban practices and beliefs through a detailed study of a Tokyo ward. Although he does include in his study practices such as those relating to the kimon, even his work neglects fortune-telling, people's concern with yakudoshi and other common practices such as the putting up of New Year decorations (which are sometimes prayed to when first put up or may be regarded as a type of mamori safety charm). Dore's fieldwork was conducted during six months of 1951, using Japanese assistants for conducting interviews, so that his work is now over 30 years old. This produces a second major deficiency for those concerned with contemporary Japan because of 3 major influences on religion since that time:

a) The rise of many 'new religions' which came more into prominence during the 1950s, so that by the early 1960s 171 were officially registered with the Ministry of Education with a total claimed membership of over 18 million people (Thomsen 1963: 17).

b) Although Dore's study was conducted five years after the Emperor formally renounced his claim to divinity, the longer-term effects of this could not have been seen, particularly regarding its possible effects upon secularisation.

c) The rapid industrialisation and urbanisation of the 1950s may have led either to secularisation, through the separation of large numbers of people from the traditional forms of religion they had experienced in the rural areas, or to the growth of new religions as such people sought 'spiritual support' (Agency for Cultural Affairs 1972: 27).

There is therefore a great need for a far more holistic study of 'practical' religion in urban Japan, one which will rectify the rather fragmented impression derived from the above bibliographical survey and one which will include the practices and attitudes of both the 'religious'

and the 'non-religious' sections of the population (cf. Geertz 1973: 109, footnote 33).

The sphere of 'belief'

In the same footnote Geertz comments that 'the oft-heard generalization that religion is a human universal embodies a confusion between the probably true . . . proposition that there is no human society in which cultural patterns that we can . . . call religious are totally lacking, and the surely untrue proposition that all men in all societies are, in any meaningful sense of the term, religious'. He then notes that 'if the anthropological study of religious commitment is underdeveloped, the anthropological study of religious noncommitment is nonexistent'. Such terms need some clarification, because 'religious commitment' or 'non-commitment' can be measured on the scales of both 'belief' and 'practice': for example, in the following chapter the religious behaviour and attitudes of a sample of the Japanese population will be described and analysed, despite the fact that over 70% of them claim to have 'no religion'. What such a claim means will be discussed later, but it is sufficient to point out at this point that most of those in this 'non-religious' category perform actions which might be called 'religious' (such as worship at Buddhist altars, visits to ancestral graves, Buddhist temples or Shinto shrines[2] or the purchase of safety charms) at least several times each year and sometimes on a monthly or daily basis. Four permutations between 'belief' and 'practice' can be isolated:

---

(2) In accordance with common practice, Buddhist institutions are here called 'temples' and Shinto ones 'shrines'. 'Shinto' is a rather loose term which includes aspects of nature worship or 'animism' focussed on particular localities or attributes of the gods (kami) - also a loose, 'catch-all' term (cf. Iwata 1979) - but generally 'Shinto' tends to refer to Japanese religious activities which are not Buddhist, Christian or clearly linked with any other religion.

(a) Belief plus practice
(b) Belief plus non-practice
(c) Non-belief plus practice
(d) Non-belief plus non-practice

Anthropological studies of religion have always had to cope with this dichotomy between belief and practice: to what extent do people belief what they are 'supposed to believe' (this concept being derived from the philosophical level), practise what they do believe, or believe what they are observed to practise? Such questions are almost impossible to answer in any absolute sense, largely because of the problem of fully penetrating the mind of another person - which humanly is impossible, the nearest approximation to it only being through long-term close contact as in marriage. A more realistic approach to this dichotomy is to ask the question, 'To what extent do people actually practise what they are 'supposed to' practise?'. Answers to this question are at least quantifiable, and may give an indirect indication of possible beliefs in a person's mind, but owing to the multiplicity of possible motives for performing religious acts even this approach does not fully answer the question about belief. Such an approach may provide a useful starting-point but tends to generate statistics without an understanding of motives. It is only when motives are understood that one can distinguish between, for example, 'hypocrisy' and 'custom' (a distinction which may be consonant in many cases with that between permutations (b) and (c) above) or between 'nominal' faith and 'real' faith (perhaps close to the difference between permutations (a) and (b)). 'Mitigating circumstances' such as illness, distance of travel to a place or worship or even imprisonment (in some totalitarian states) may need to be taken into account if these impede 'believers' from practising what they would do in other conditions; these can only be assessed by understanding individual motivations, attitudes and circumstances.

Circumstances may block a desire to perform religious rites or else, through social pressure or conformity to 'custom', may produce religious behaviour in those not desiring to participate. The will may be over-ruled by circumstances, but it is also instrumental in focussing 'belief'. A decision of the will can transform a 'passive' belief, as verbal affirmation of doctrine, to an 'active' aspect which affirms that those doctrines have relevance to, and a meaningful connection with, one's personal life. Similarly, the will is involved in transforming 'passive' unbelief to 'active' unbelief: for example, if Hick's argument (1963, 1973: 15-47) that on a philosophical level the existence of God (in this case, the Judaeo-Christian one) can neither be proved nor disproved[3], then it involves a decision of the will (removed from the realm of logic) to affirm that one is an atheist. The agnostic might keep his options open on an intellectual or philosophical level, but on a 'practical' level has often made a conscious or relatively unconscious decision to adopt a lifestyle, moral code or political or social philosophy on the assumption that God does not exist or, if He does, that such a fact has no relevance to his or her daily life. Conversely, those who decide that God does exist on a philosophical level have a number of choices on the practical level concerning the extent to which they allow that 'passive' belief to become 'active' in their own lives by its effect on their lifestyles (use of

---

(3) Hick's arguments are confined principally to the 'philosophical' level and do not take very much account of the 'practical' level, which for many believers is more relevant. At this level, God's existence is experienced through phenomena such as miracles, divine guidance or 'gifts of the Holy Spirit'. However, Hick (ibid., p.30) does admit that many would disagree with his assessment and would hold that one or more of the various arguments for the existence of God are rationally persuasive. Basil Mitchell (1973) goes beyond the traditional arguments and indicates a way out of the impasse; on the way he also shows (in chapter 7) how non-religious and even scientific world-views and other large-scale systems of belief such as moral or political theories also share a need for 'faith' on the part of their adherents.

time or money etc.), moral conduct or political or social action. 'Belief' and 'unbelief' are both processes marked by a series of acts of the will not always directly linked to rational or philosophical logic and its boundaries of applicability[4].

This distinction between 'active' and 'passive' belief, often mediated by an act of the will, is not dissimilar to Southwold's (1979: 635-6) distinction between belief as 'symbolically true' versus 'factually true'. By the former he refers particularly to dogmas or tenets which are regarded as having a 'fitting' or 'appropriate' relation to reality but such a relationship is different from that expressed in every day or scientific language. It appears from Southwold's examples that 'symbolic' belief is more often associated with a 'passive' level of discourse than with the 'active' aspect of religious affirmations, but this may be more a matter of degree than a qualitative difference. Individuals may move between the philosophical and practical levels of discourse or between passive and

---

(4) Southwold (1979: 633-5) has argued that many religious beliefs are empirically indeterminate or are axioms rather than doctrines subject to an analysis of their validity, especially in so far as they are taken as axiomatic by believers. Nevertheless, he also argues that the anthropologist does have the right to ask questions about whether or not a particular religion is 'true', and that it is 'meaningful to speak of a religion, or interpretation of a religion, as true, and as more true than another, and that there is a satisfactory empirical test for such truth', even if the anthropologist is unable to claim to settle the question finally (1973: 57-59). However, at the level of axioms there is often inconclusive evidence either way, as Southwold shows for the Buddhist concept of rebirth (1973, chapter 4). In such cases, whether the axiom be Jewish, Buddhist, or whatever else, an act of the will is required for a person to assert either 'belief' or 'disbelief', such an act of the will not being necessarily based on strictly 'logical' grounds for either disbelief or belief, partly because the experiential component is less amenable to cold, logical analysis.

active modes of belief both in discussing different aspects of their religious experience and during the course of their lives as a result of religious experiences (such as, for example, miraculous healing, an experience of which may transform a person's attitude from one of 'passive' belief - or a belief in healing as 'symbolically true' - to an 'active' belief in it being 'factually true'). Therefore in any given population and in relation to any particular belief or doctrine there is likely to be a spectrum of 'belief', marked by variations in the degree to which it is held actively or passively, and often there will be some sceptics who deny the belief altogether. In between the extremes of 'active belief' and 'active disbelief' there is not only a gradation into 'passive belief' or 'passive disbelief' but also a wide 'grey area' of intermediate religious commitment marked by the reply of "Don't know". Runciman (1970: 67 ff.) has argued that such a response is a valid one in questions of religious belief, and it is likely to be a typical response from many of those who are religiously uncommitted but not anti-religious.

Southwold (1979: 637-8) suggests four conditions which must be satisfied if an anthropologist is to claim that a person factually believes a certain proposition. He elaborates on each of these points in some detail, but the basic conditions are as follows:

a) 'There must be some situations in which some sets of acts are consistent with . . . the proposition's being factually true, and a different set of acts consistent with . . . its being false',

b) 'In such situations he must predominantly do those acts that are consistent with its truth rather than those that are consistent with its falsity',

c) 'There must be evidence that he entertains this proposition in association with these acts',

d) 'His conduct cannot with comparable plausibility be explained by an alternative hypothesis'.

Since Southwold allows the third condition to be satisfied by verbal affirmations of belief, in essence these conditions are satisfied by a correlation between verbal affirmation of a belief and behaviour consistent with it in the same person. The converse also holds, that disbelief may be attributed to someone who verbally denies a belief and who refuses to participate in acts consistent with that belief. Between these two extremes there are four possible permutations between verbal affirmation or denial and participation or non-participation; these, when added to the extremes of belief and unbelief, produce six principal categories:

Fig. 1.1 The relationships between participation and verbal expression

Verbally expressed attitudes		Participation in rites	
		Yes	No
	Belief	A	B
	"Don't know"	C	D
	Disbelief	E	F

At the risk of an unnecessary multiplication of categories, the 'belief' and 'disbelief' categories may be further sub-divided into active and passive belief or disbelief, but it is likely that in practice 'passive' belief would tend to be associated with category 'B' (non-participation) and 'passive' disbelief with category 'E' (participation), but where participation is to some extent individualistic and voluntary there may be a gradation between categories 'A' and 'B' and between 'E'

and 'F' depending on the frequency of rites: 'active' belief may be correlated with daily rituals and 'passive' belief with occasional rituals, and conversely for disbelief. Categories 'C' and 'D' remain intermediate. However, such a priori assumptions will need to be tested in practice, and at the same time will need to take into account the fact that many informants regard their participation in rites as 'custom' rather than 'religion'. To some extent this is a result of the ambiguity of the common word for 'religion' in Japanese, shūkyō, (cf. Spae 1971: 22-4), but it may also be a product of 'passive' rather than 'active' belief, or an attitude of "Don't know". Cultures and religious groups vary in the extent to which there is public teaching on the 'meaning' of rituals, and in some cases an assumed or imputed 'original meaning' may have been forgotten while the rite continues to be practised as a 'custom'. In such cases the participants might hold a wide range of private attitudes or 'beliefs', or else participate because of social benefits arising from conformity versus possible social discomfort from non-conformity. Although Southwold (1979: 641) states that 'private symbolisms should not have a large place in ethnographic reports, the primary concern of which is to report what is common to members of a society', he continues, 'it seems likely . . . that the greater part of the symbolic truths that a normal person holds are collective'. To what extent they are collectively shared or not needs to be determined empirically in each case, and to be representative of a society the ethnography should report also the views of the 'non-religious' (Geertz 1973: 109, footnote 33) and of minority groups (such as, in Japan, the 'new religions' and Christians), even if these are given only a minor place. Often those who 'disbelieve' are not 'atheists' but adherents of an alternative religion such as Christianity. However, a more problematic area concerns the distinction between 'religion' and 'custom'. Those who participate in a rite because it is a 'custom' - or

for whatever other, latent, social benefits may arise out of conformity as compared to risks involved in non-conformity - might recite phrases with a 'religious' content, visit 'religious' places and to all appearances act in exactly the same way as those who call the same conduct "religious". Even if those who view the rites as 'religious' constitute a minority with an 'active' belief, the majority holding a 'passive' belief[5], an agnostic attitude or even an avowed disbelief while still participating (often equivalent to 'passive' disbelief), it is still impossible to distinguish 'religion' from 'custom' objectively. 'Religion' shades imperceptibly into 'custom' and they become two sides of the same coin rather than polar opposites, although individuals may choose one label in preference to another depending on the extent of their 'active' or 'passive' belief, unbelief or uncommitted stance[6]. Such subjective definitions of 'religion' are insufficient for objective analysis, however, so a closer examination is needed of the nature of 'religion'.

The sphere of 'religion'

By focussing on 'practical' rather than 'philosophical' religion, on behaviour and attitudes rather than texts and sects, the actual content of 'practical' religion has to be determined empirically. In Japan this includes the ancestor cult, fortune-telling and ceremonial events, and, following Obeyesekere (1968: 16-18), it should also relate to ethics,

---

(5) This distinction corresponds to Japanese usage, whereby a person can 'hold' a religion (shūkyō o mamoru) but not 'believe in a religion' (shūkyō o shinjiru). The former is more common and refers to the performance of expected religious acts without necessarily 'believing' in them, whereas the latter is a more 'active' belief and practice. The former type are more likely to call their actions the observance of 'custom' (shukan, or one of its many synonyms) rather than the observance of 'religion' (shūkyō).

(6) The impossibility of distinguishing 'religion' from 'custom' when the 'customs' take place in contexts which would otherwise be called 'religious' is stressed here because some of the practices described in the following chapters as 'religious' are often called 'customs' or 'traditions' by some Japanese unwilling to use the label 'religious', whereas others do call them 'religious'.

although the reasons for their inclusion hinges on one's definition of 'religion'. This is a problem which has persisted in anthropological studies of religion since the time of Tylor, shose definition (1873: 424) - a 'belief in Spiritual Beings' - raises problems in the light of Buddhist theology, which does not involve such beliefs. Durkheim (1918: 41,47) therefore based his definition of religion upon a dichotomy between the sphere of the 'sacred' and that of the 'profane', but the boundaries between these spheres, their interrelationships and overlap, then become problematic (Evans-Pritchard 1965: 63-8). Southwold (1978) takes a different approach, viewing 'religion' as a polythetic rather than a monothetic category, and therefore as incapable of any single universalistic definition. Rather, he lists a number of traits which are often or usually found in religions, not viewing the list as necessarily an exhaustive one, but taking the attitude that 'religion' always will include at least some cluster of these traits(7).

Southwold shows how, although 'practical' Buddhism does not manifest a central concern with godlike beings, it so resembles religions in virtually every other aspect - by which he is thinking of Christianity,

---

(7) Southwold's list (1978: 370-371) is as follows:
1) A central concern with godlike beings and man's relations with them.
2) A dichotomisation of elements of the world into sacred and profane, and a central concern with the sacred.
3) An orientation towards salvation from the ordinary conditions of worldly existence.
4) Ritual practices.
5) Beliefs which are neither logically nor empirically demonstrable or highly probable, but must be held on the basis of faith.
6) An ethical code, supported by such beliefs. . . .
7) Supernatural sanctions on infringements of that code.
8) A mythology.
9) A body of scriptures, or similarly exalted oral traditions.
10) A priesthood, or similar specialist religious elite.
11) Association with a moral community, a church (in Durkheim's sense . . .).
12) Association with an ethnic or similar group.

'the religion prototypical for our conception' - that Buddhism should still be viewed as a 'religion' (1978: 367). His Sinhalese informants called Buddhism an '*āgama*', a word also used for Hinduism, Christianity and Islam, but which is not strictly equivalent to the English word 'religion' (ibid., p. 363). These '*āgama*' relate to non-worldly or 'supraworldly' matters, and as such '*āgama*' constitutes an 'emic' category which needs to be taken into account when the anthropologist formulates his or her 'etic' categories, in just the same way as Durkheim took account of Buddhist 'emic' theology in rejecting Tylor's 'etic' definition of religion. However, the 'emic' idea that an *āgama* is concerned with 'lokottara' (non-worldly or 'supraworldly') matters is rather too vague a concept to use as an 'etic' definition of 'religion'.

Rather than going round in circles trying to find a satisfactory definition of religion, some have admitted that 'there is not a generally accepted definition of religion and religiosity, neither from the theological, nor from the sociological point of view. There are only working and descriptive definitions of these terms, varying in content and exactness . . .' (Spae 1971: 11), and so they have either abandoned the quest for such a definition or, with the exception of Southwold, have adopted either the original or modified versions of the definitions proposed by either Tylor or Durkheim. Southwold takes a different approach by abandoning the assumption that 'religion' is a monothetic class, but by proposing a polythetic definition he may be allowing the inclusion in his category of 'religion' that which in 'emic' terms is not a 'religion'[8].

---

(8) This is the opposite weakness to Tylor's definition, which excluded Buddhist 'emic' theology from its 'etic' definition of religion.

The prime example of this is Marxism. As seen in the U.S.S.R. today it has a set of well-developed ceremonial or ritual practices (relating to the calendar and to rites of passage) which are not only very similar to those of religion but also often function as substitutes for former religious events (Binns 1979 and 1980). A few examples of the quasi-religious aspects of Marxism include the 'pilgrimages' to Lenin's tomb in Red Square (containing his artificially preserved body), the Marxist 'eschatology' which views the whole world as eventually progressing from 'Socialism' to 'Communism' (the abolition of exploitation leading in theory to the elimination of all social evils), the corpus of Marxist 'scriptures', subject to a variety of 'fundamentalist' versus 'liberal' interpretations, and the persecution of 'heretics' (dissidents, ethnic minority nationalists and religious believers - whose faith in some ways poses a threat to the system). According to Southwold's list, these 'ritual practices', 'scriptures' and 'orientation towards salvation from the ordinary conditions of worldly existence' would qualify Marxism for inclusion in the category of 'religion', but, even if features found in religions have been used by Marxism to further its aims, in 'emic' terms it is avowedly not a 'religion' and manifests an intolerance of 'religion' in both theory and practice.

The same problem confronts the distinctions between 'magic' and 'religion'. The former also includes features found in Southwold's list, such as 'ritual practices' or 'beliefs which are neither logically nor empirically demonstrable but must be held on the basis of faith'. Mauss (1972: 24) regarded magic as that which involves the absence of an established 'church' (in a Durkheimian sense) (although the methodology and types of foci of belief may be distinguishing factors in some cases too) but fundamentally distinctions between 'religion' and 'magic' (and

similarly between 'religion' and 'superstition') rest largely on the distinction between orthodoxy and unorthodoxy. In many cultures, the Azande being the most famous example (Evans-Pritchard 1937), there may be no clear distinction between 'magic' and 'religion' in practice, whereas in Jewish and Christian orthodoxy both magic and fortune-telling are viewed as antithetical to orthodox religion (Deuteronomy 18: 9-13). Even if the anthropologist sees relatively little difference in terms of the 'etic' categories he imposes from outside, the 'emic' viewpoint of the people concerned still needs to be taken seriously, as Durkheim did for Buddhist theology.

It may be more practicable, therefore, to stipulate some kind of a 'core area' of necessary and sufficient conditions which would serve to identify the 'religious' in contrast to the 'non-religious' spheres of human activity. Those like Goody (1961: 143-164) who feel it may be simpler to return to Tylor's definition or a modified version of it are still confronted by the problems of Buddhist, Confucian and, to some extent, Taoist doctrines which do not involve 'spiritual beings'. One approach may be to regard these as 'philosophies' rather than 'religions' - as Moeran (n.d.) has recently argued for Confucianism - but there remains the problem in 'practical' religion whereby the majority of those 'Buddhists' in Sri Lanka studied by Southwold (1978: 365) participate in cultic practices directed specifically to 'gods', including those who claim not to believe in 'gods' but who participate in order to avoid giving offence to others. The same is true of Japan, where most 'Buddhists' also pray to Shinto gods or, sometimes, to idols of Bodhisattvas such as 'Jizō' who are conceived of in essentially the same terms as 'gods'. At a practical level, the majority of a population may hold some kind of active or passive belief in the existence of 'gods' of some kind, only a minority rejecting

the concept, either because of a stronger adherence to the 'philosophical' level of Buddhist (or Confucian) doctrine or because of a cynicism towards 'religion' (or certain aspects of 'religion'), or else they may reject the conventional view of the gods and replace it by another (such as a Christian or Muslim doctrine). Since the latter also believe in a God, it is only the two former types of minority groups who do not 'believe' in gods (but, as Southwold has noted, may still participate in rites directed towards the gods).

In this context it is relevant to point out that the theological exceptions to a general belief in divine beings - i.e. Buddhism, Confucianism and Taoism - all arose relatively late in human history out of situations where there had been a belief in gods or a God and this belief has persisted throughout the centuries to a greater or lesser extent. Hinduism still flourishes in India, and Hindu gods have become incorporated into the Buddhist pantheon at a practical level, whereas the emergence of Confucianism and Taoism in China and the later popularity of Buddhism seems to have been made possible in part by the restriction of the worship of the creator god, Shang Ti, to the Emperor alone, thereby creating a kind of 'spiritual vacuum' among the general population (Richardson 1981: 64;66). This Shang Ti is only one example of a widespread belief in a kind of supreme 'sky god', the worship of whom does not appear to be closely correlated with any particular form of economic, political or social organisation (cf. Schmidt 1931, Part IV). However, if historical processes such as those which caused Shang Ti to be almost (but not completely) forgotten among the general population have also obscured or almost obliterated beliefs which were once much more widespread in human cultures, such beliefs are likely to be overlooked by anthropologists during their relatively short periods of fieldwork (Richardson 1981; cf. also Tylor 1873: 419-423). Such an oversight may distort the anthropologist's 'etic'

classifications of a society in much the same way as the Western perception of Buddhism has been distorted by an over-reliance on texts or views supporting one particular interpretation of Buddhism (see Southwold 1983). Similar kinds of oversights may have been responsible for distorting some anthropologists' views on why 'foreign' religions such as Christianity are adopted by certain peoples holding traditions which are already more compatible with the 'foreign' religion than would appear to be the case superficially (see Richardson 1981). Even if minority traditions are not to be accorded a major place in ethnographic reports (Southwold 1979: 641), the ignoring of such traditions may present a distorted picture of the incidence of features in religion which may be closer to universal phenomena than is normally thought.

Nevertheless, the theological or philosophical bases of Confucian, Buddhist and, to some extent, Taoist thought invalidate the adoption of a belief in a supreme being or, more widely, in 'gods' or 'spiritual beings' as the core of a definition of 'religion', unless these exceptions are classified as 'philosophies' rather than 'religions'. Other facets of human culture such as purity and pollution concepts (Douglas 1966) or the sacred/profane distinction advocated by Durkheim, are often linked to religious expressions but are not in themselves clear enough demarcations of the sphere of 'religion' (cf. Evans-Pritchard 1965: 63-8) to serve as criteria of 'religion', largely because such phenomena are not in themselves sufficiently distinct from 'religion' to demarcate the boundaries of the concept. Any attempt at a 'Real Definition' of a monothetic category needs to provide a landmark outside of that category in relation to which the category's boundaries and spheres of applicability can be set in place. Definitions which relate to aspects equal to or less than the category itself end up as descriptions which are often imperfect because the whole may be greater than the sum of the parts. Polythetic definitions

such as Southwold's which simply list the constituent parts, the list not necessarily being exhaustive, encounter the same weakness.

Southwold does conclude his discussion (1978: 373-6) by acknowledging that an idea of 'mystical notions' does appear to apply to all religions, and as such may indicate that 'religion' is a monothetic class after all, but he regards it more as a 'by-product of religious behaviour' (p. 376) than as its source; as such it may not be a sufficient 'core' for a definition of religion. The concept of 'empirical indeterminacy' is less widely distributed but has a greater explanatory power (ibid., pp. 374-6), and also fits the notion of karma in Buddhism. However, it applies also to notions of 'quarks' in sub-atomic physics and to ideological components of Marxism. The concept of karma in Buddhism is generally pictured as a moral force of some kind operating at an individual level, but containing a force of destiny greater than that of the individual, whereas Marxist notions of 'historical materialism' operate at a societal level and may allow the use of what many might consider immoral means (secret police, labour camps and a questionable use of psychiatry, for example cf. Kerblay (1983: 243-7)) to achieve its utopian ends. The distinguishing factor between the 'religious' concept of karma and a historical materialism which is said to cause the progression from one 'mode of production' to another, therefore lies at the level of morality and of 'spiritual' values: karma is a 'spiritual' force which has morally determined consequences.

The term 'spiritual' has many meanings, nine of which are listed in the Shorter Oxford English Dictionary (1973 edition, p. 2079). These include meanings such as 'of, pertaining to, affecting or concerning, the spirit or higher moral qualities, especially as regarded in a religious aspect', 'of, belonging or relating to, or concerned with sacred or

ecclesiastical persons or things, as distinct from secular' and 'of, pertaining to, or consisting of spirit, regarded in either a religious or intellectual aspect; of the nature of spirit or incorporeal supernatural essence; immaterial'. As a 'moral' force - a power which influences human destinies as a consequence of their ethical conduct in this life - karma may be said to be a 'spiritual' force - taking 'spiritual' in the meaning given as 'of . . . the spirit or higher moral qualities, especially as regarded in a religious aspect'[9] - but it is not a 'spiritual being' in Tylor's sense. Concepts of yin and yang may be 'spiritual' forces - in the sense of spiritual as 'incorporeal supernatural essence; immaterial[10], - but neither are they 'spiritual beings'. Tylor's definition could be revised therefore to refer to 'a belief in spiritual forces or entities', or, if 'belief' is too strong a word for categories B to E in Table 1.1, a 'central concern with spiritual forces or entities' may characterise 'religion'.

The key word then becomes 'spiritual', but the various meanings of this word require some narrowing down of the concept in terms of its sphere of applicability. This may be done at a 'practical' level, where for many people an encounter with the 'spiritual' is brought about through a recognition of their own sinfulness, powerlessness or limited understanding. As Geertz (1973: 100) expresses it:

---

(9) The emphasis here is on 'higher moral qualities', since the reference to a 'religious aspect' presupposes other definitions of 'religion' and is therefore a circular argument in the present context.

(10) Yin and Yang would also be included in an older usage of 'spiritual', dating from 1725, meaning 'of or pertaining to, emanating from, the intellect or higher faculties of the mind; intellectual'. (Perhaps the same might be said of karma).

> 'There are at least three points where chaos - a tumult of events which lack not just interpretations but interpretability - threatens to break in upon man: at the limits of his analytic capabilities, at the limits of his powers of endurance, and at the limits of his moral insight. Bafflement, suffering, and a sense of intractable ethical paradox are all, if they become intense enough or are sustained long enough, radical challenges to the proposition that life is comprehensible and that we can, by taking thought, orient ourselves effectively within it - challenges with which any religion, however "primitive", which hopes to persist must attempt somehow to cope.'

Particular religions vary in the extent to which these three dimensions of the spiritual plane - power, knowledge and morality - are emphasised, so that some religions may hardly touch on ethics whereas others like Confucianism may relate almost wholly to ethics and hardly touch on the power or knowledge dimensions[11]. Even if these three dimensions do not constitute an exhaustive list, Geertz sees them as necessary components of any religious system 'which hopes to persist': as such they relate to universal needs in man which need to find fulfilment in some way, a fulfilment which religions seek to provide by relating these needs to a spiritual plane of existence. This spiritual plane brings human ignorance into contact with superhuman knowledge and wisdom, human weakness into contact with superhuman power and human sin into contact with superhuman moral absolutes. Once this encounter has been

---

(11) In practice, however, Confucianism (at least in Japan, and probably to a large extent in China too) is not an 'exclusive' religion but tends to provide an ethical component in the mixture of 'religions' at a 'practical' level in which many resort to Buddhist or other forms of religion for the 'power' and 'knowledge' dimensions. Rather than discussing such 'religions' in terms of abstract conceptions of doctrine, their place in the total system needs to be analysed in order to understand the mixture of the 'power', 'knowledge' and 'ethics' dimensions at the 'practical' level of religion.

achieved, a person's life might be transformed, renewed or challenged to live on a new level, that of the 'spirit', and he or she may begin to relate many more areas of his or her life to this spiritual dimension. This encounter may be a gradual process in which the steps are less clearly perceived than in more rapid cases (the latter often labelled 'conversion experiences') but at least initially the encounter involves some act of the will - a definite decision to relate one's life to a spiritual plane of reality - which is usually accompanied by a shift from 'passive' to 'active' belief. Those involved may categorise this as a shift from 'normal' to 'committed' religiosity, or a number of other terms which indicate a new spiritual experience on the practical level - rebirth being a common metaphor - but for those whose background is an atheistic philosophy or another major religion (meaning religions such as Islam and Christianity rather than denominational differences, though these differences tend to merge into a continuum) the stages of philosophical and passive acceptance of doctrines are involved in the process in conjunction with (and generally prior to) practical and active commitment. Similarly, definite decisions of some sort are required to move from 'religious' to 'non-religious', 'practical' to 'philosophical' and 'active' to 'passive' modes or attitudes towards religion.

A definition of 'religion' by reference to a 'spiritual' plane of existence which includes superhuman power, knowledge and moral codes has the advantage of being more concise than the list of features given by Southwold and of delineating a 'core' area of religious experience[12]. It also relates to a 'spiritual' sphere which is somehow 'greater' than religious experiences or doctrines themselves, in the sense that all

---

(12) Spae (1971: 29 ff.) remarks that 'it is generally admitted that there is no genuine religion without "religious experience"'.

religious rites, mythology and institutions etc. relate to this 'spiritual' plane, directly or indirectly. Geertz seems to suggest that all 3 of the elements he mentions need to be incorporated into any viable religious system; therefore even if one or two of them are attenuated in any particular religion, they are rarely, if ever, lost altogether. To the extent to which these elements of 'religion' are universally present (which would need to be verified empirically) this definition would tend to approach a monothetic category.

Finally, it needs to be noted that the spiritual plane itself is not undifferentiated but is usually categorised in terms of a dualism between good and evil spirits or a higher, supreme (usually good) god and lesser (generally evil or morally mixed) deities, even if concepts such as those of a heaven or hell are lacking. Among many peoples are found distinctions between legitimate and illegitimate relations with the spiritual world. Therefore witchcraft is usually seen as an illegitimate spiritual power to be feared, whereas prayers to Kwoth among the Nuer, for example, (Evans-Pritchard 1956: 1-27) are legitimate and socially acceptable. This distinction between legitimate and illegitimate spiritual power among many tribal peoples is essentially the same distinction made in other religious systems between 'religion' and 'magic'. The former is orthodox and socially acceptable; the latter is unorthodox and socially or individually dangerous because it involves evil and occult spiritual forces[13].

---

(13) cf. Mauss (1972: 24): 'Magical rites . . . are always considered unauthorized, abnormal, and, at the very least, not highly estimable . . . A magical rite . . . is private, secret, mysterious, and approaches the limits of a prohibited rite'.

Theoretical Orientation

Geertz (1973: 87-8) has pointed out that anthropological work on religion since the Second World War 'has made no theoretical advances of major importance', merely 'living off the conceptual capital of its ancestors', what concepts it does use being derived from 'a very narrowly defined intellectual tradition', principally comprising the works of Malinowski, Freud, Weber or Durkheim, 'but virtually no one even thinks of looking elesewhere . . . for analytical ideas'. In the diversity of phenomena which consitute Japanese religion, each of these four approaches may elucidate certain aspects of religious practice Malinowski's (1974) discussion on rites for safety in Melanesia may be relevant to Japanese possession of safety charms, for example, or Durkheim's emphasis on the social dimensions of religion may aid understanding of Japanese local festivals) but none of these approaches seems sufficient to understand the diversity of religious practices in Japan. A piecemeal approach using Weber's (1963: 61-2, 102-5, 169-171, 212-3 etc.) views on the social organisation of Buddhist institutions or theology or Malinowski's (1974) insights on safety rites leaves a rather unsatisfactory overall impression that Japanese religion is too inscrutable to be amenable to any overall analysis. It may be the difficulties facing such a task which has led many anthropologists to focus on particular aspects such as ancestor worship (Smith 1974) or folk religion (Hori 1968) rather than attempting an overall synthesis. Some Japanese anthropologists (such as Umesao and others 1972) take the view that Japanese religion is 'fragmented' but nevertheless adopt certain models which are simply analogies with economic life ('maker' and 'user' distinctions) to explain surface relationships among religious groups or to describe personal religious attitudes, but such models do not provide any understanding of the roots of Japanese religiosity or of the forms it takes in adopting particular

styles and emphases (such as ancestor worship or beliefs in 'calamitous years'). Another approach is content to see Japanese religion as 'multi-layered' (e.g. Namihira 1974: 231-2) and to point out a few consistencies between the layers, such as purity and pollution concepts, but does not attempt any deeper analysis of the motivations behind religious practices.

It is the level of motivations which will be the principal concern of Part II. This seeks to elucidate some of the underlying motivations or concerns which channel Japanese religiosity into particular moulds. The surface patterns of these motivations may change to some extent over time, but the underlying concerns or motivations appear to be constant, as evidenced by the fact that these features of Japanese religion, such as the ancestor cult, safety charms, purity and pollution concepts and beliefs in 'calamitous years', have a long and enduring history and have remained strong in urban areas despite influences from urbanisation, population movements or industrialisation which might have been expected to weaken some of these features if secularisation had been taking place. Instead, as will be shown, the incidence and strength of such beliefs and practices remains very high. The surface manifestations may change but the underlying motivations remain constant.

These motivations lie close to the heart of the religious experience or to the nature of 'religion' as 'defined' by Geertz (1973: 90). His 'definition' is in fact still more a 'description' than a 'definition', but it is a useful indicator of some of the cultural functions and manifestations of the religious sphere of life. He calls 'religion'

> '(1) a system of symbols which acts to (2) establish powerful, pervasive and long-lasting moods and motivations in men by (3) formulating conceptions of a general order of existence and (4) clothing these conceptions with such an aura of factuality that (5) the moods and motivations seem uniquely realistic'.

Despite the value judgement about the nature of reality contained in the fifth part of this 'definition', the emphasis on 'moods and motivations' in the second part furnishes a useful insight into what should be one of the primary concerns of the anthropological study of religion. Sociological statistics on the incidence of certain surface features of religious expression - and there are plenty of such statistics available in Japan (e.g. Morioka 1981, Basabe 1968 or the religious sections of the study on Japanese National Character conducted every five years by the National Institute of Statistical Mathematics[14]) - can provide indications of surface trends or of changes in 'fashion' but do not delve below the surface to elucidate why people behave in these ways or what motivations or attitudes they have towards these phenomena.

'Attitudes' are closely linked to 'motivations'. By 'attitudes' is meant

> 'a mental and neural state of readiness, organized through experience, exerting a directive or dynamic influence upon the individual's response to all objects and situations to which it is related' (Allport 1935; quoted by Spae 1971: 14)[15].

As 'directive and dynamic' influences, attitudes are more closely linked to underlying 'motivations' for religious behaviour than to the surface manifestations of such behaviour, and therefore often indicate, directly or indirectly, deeper motivations which are not always obvious to the outside researcher. The attitudes of informants to religious activities will therefore be examined in the following chapters. Although some

---

(14) English summaries of some of this material is available at the Institute of Statistical Mathematics in Tokyo and a general introduction to the work done is given by Nishihara (1961).

(15) Milton Rokeach (1968: 457) offers a much longer and more extended definition of attitude, but in essence it embodies a similar conceptualisation to that of Allport.

attitudes may be idosyncratic, most in fact display some basic consistencies, indicating that the study of attitudes

> 'makes room for conformity but also for autonomy; for independence and response to personal insights but also for interdependence within the various societal groups to which man belongs' (Spae 1971: 15).

Therefore attitudes tend to be intermediate between the individual and the group, affected by both to varying degrees, or else reflect basic common motivations sometimes affected by personal 'moods'.

Geertz (1973: 96-8) distinguishes between 'moods' and 'motivations' as follows:

> 'A motivation is a persisting tendency, a chronic inclination to perform certain sorts of acts and experience certain sorts of feeling in certain sorts of situations . . . . The major difference between moods and motivations is that where the latter are . . . vectorial qualities, the former are merely scalar. Motives have a directional cast, they describe a certain overall course, gravitate toward certain, usually temporary, consummations. But moods vary only as to intensity: they go nowhere. They spring from certain circumstances but they are responsive to no ends. Like fogs, they just settle and lift; like scents, suffuse and evaporate . . . Further, where motives persist for more or less extended periods of time, moods merely recur with greater or lesser frequency, coming and going for what are often quite unfathomable reasons . . . Motivations are 'made meaningful' with reference to ends toward which they are conceived to conduce, whereas moods are 'made meaningful' with reference to the conditions from which they are conceived to spring'.

This distinction between moods and motivations is worth quoting at length because it appears that the two have not been clearly distinguished

by at least two[16] of the authors who have written about these matters, Spae (1971) and Moeran (1984). Spae's book contains some useful and enlightening discussions on Japanese emotions, and qualities such as 'estheticism' or 'intuition', but one is left with the impression that these are mainly 'moods' which may recur more frequently in Japan than perhaps in other cultures and which take particular expressions or forms in Japan, but in concrete terms these do not seem to explain why Japanese religion takes the particular forms it manifests in practice. To take just one example, Spae (1971: 31-2) points out a consistency between the open-air arrangement of Shinto shrines, the 'stunning natural beauty' of Japan itself and a feeling of closeness to nature among the Japanese people[17] - but there are plenty of other countries with 'stunning natural beauty' where perhaps a 'closeness to nature' is manifested by the customs of having private gardens where the countryside is imported into the city or often taking holidays in rural areas, but places of worship are not necessarily as 'close to nature' as are Shinto shrines. It may well be that the 'mood' of 'closeness to nature' is stronger in Japan, but, if so, one would need to find a more convincing explanation

---

(16) These two are singled out because they are recent examples, though to some extent Benedict (1946) also touches on some of these basic feelings in Japanese culture. Popular stereotypes of the Japanese as 'artistic', 'emotional', 'sensitive' or whatever, often repeated in guide-book type literature for casual visitors, tend to reiterate such ideas.

(17) Similar ideas are probably contained in the comment on p. 14 about Japanese religiosity being 'closely associated with ambience such as . . . the scenic beauty of places of worship. Spae does not actually use the term 'closeness to nature' but he refers to rites in shrines and temples which 'one would almost say, emotionally, blend into the surrounding nature', the whole setting expressing 'the harmony between gods and man' (pp. 31-2). Elsewhere he writes that 'Japanese emotions are nature emotions', partly 'because they are powerfully influenced by nature in general and by every surrounding aspect of it in particular . . . This total affectivity carries within itself the seeds of a natural mysticism; it personifies Nature as the total Self; it has the quality of the numinous'.

for the strength of this mood - preferably one which would link it to a 'motivation'[18].

Moeran's article (1984) does not deal specifically with Japanese religion but confronts the area of Japanese moods or motivations from a linguistic analysis of various 'key words'. He borrows an idea of Parkin's (1976) which suggests that certain 'key words' carry significant cultural value orientations and are frequently used in a variety of contexts within the culture. Moeran analyses sporting vocabulary and finds that a number of words recur with high frequency - such as kokoro ('heart'), ganbaru ('compete to the end'), gaman ('endure') and giri ('socially contracted dependence') and he then proceeds to relate these to aspects of the 'individual versus group' models of Japanese society[19]. Nevertheless, it is unclear which of his key words relate to 'moods' and which to 'motivations'. Although the ones cited above are probably

---

(18) Elsewhere Spae (1971: 76) refers to the way in which 'the Japanese grow very attached to the places where they were born and have lived . . .' and these 'familiar things and places become personified' to the extent that 'in privileged moments, such as those of an intense contemplation of nature, these surroundings take on the shape of the numinous; they are worshipped . . .'. In this context Spae notes a connection between feelings towards a Japanese person's home area and nature worship. In chapter 3 some brief comments will be made about Japanese feelings towards native villages or home areas in terms of their association with 'memory', which is a motivating force in ancestor worship and, it may be suggested from Spae's comments, may have a connection also with the "moods" regarding nature worship.

(19) The group model is outlined briefly in chapter 6, based on Nakane (1970). A social exchange model is suggested by Befu (1980), but it may be that the two models are complementary in so far as the group model applies primarily to larger economic and political institutions and only loosely to smaller firms or to religious behaviour: it may apply to religious identification but not necessarily to behaviour, as will become clear from the following chapters.

'motivations', it is likely that many others (such as sawayaka ['invigorating'], ōraka ['generous'], hitashii ['intimate'] or nibui ['dull'][20]) refer more to moods, which may be felt with a greater intensity in Japan than elsewhere but are not necessarily 'motivating' forces. In the following chapters the concern will be primarily with motivations. However, Moeran's insight suggests that basic 'motivations' may be manifested in a plurality of linked words referring to specialised sub-sections of the motivations: those things which are important to a culture tend to be more finely distinguished, just as the Eskimo have several words for 'snow' or the Arabs for camels, as indicated by the Sapir-Whorf hypothesis in Linguistics (cf. Trudgill 1974, 1983: 26-7). For this reason the broad categories which form the titles of chapters 3 to 6 are rough translations into English of categories which display a variety of nuances in Japanese, as will be touched upon in those chapters[21]. The very fact of the variety gives the anthropologist greater confidence that these are key conceptual areas for an understanding of the culture[22]. Therefore the present concern is with certain 'key themes' which permeate Japanese religious life and are manifested not only at the linguistic

---

(20) Although these examples are all adjectives in English, adjectives may also describe motivations; in Japanese the same word may often function as either an adjective or noun, depending on the particle following it.

(21) Only those which are particularly relevant to the religious field will be analysed in the following chapters, but Moeran's article suggests other motivations which many be more relevant to other spheres of social life. Spae (1971: 80, 93, 147) lists some other terms used to describe Japanese national character, moral attitudes and emotional feelings.

(22) Moeran (1984: 264) notes that there is in Japan 'a 'hard core' of key words, numbering perhaps not more than a hundred words, which seems to deal adequately with all aspects of Japanese culture', but his list of some of them shows a grouping around certain linked categories such as gaman (endure), nintai (perseverance), ganbaru (compete to the end), kibishii (austere), hisshi (fight to the end), shinbō (fortitude), shikkari (staunch) and nebari (stick it out; strength) which appear to be clustered around a basic 'motivation' of 'persistence' particularly relevant to the field of sports.

level of 'key words' but, more importantly, at the behavioural level as 'motivations' for action and major influences on attitudes.

It is clear from the above references to moods and motivations that they are by no means confined to the religious sphere but constitute a sub-stratum of experience in which religious and non-religious expressions are not yet differentiated. To quote Geertz once more:

> ' . . . the endurance, courage, independence, perseverance, and passionate willfulness in which the Plains Indian practices the vision guest[23] are the same flamboyant virtues by which he attempts to live . . . . The consciousness of defaulted obligation, secreted guilt, and, when a confession is obtained, public shame in which Manus' seance rehearses him are the same sentiments that underlie the sort of duty ethic by which his property - conscious society is maintained . . .' (1973: 94-5).

There are therefore certain moods and motivations, perhaps values or attitudes, which underlie both 'religious' and 'non-religious' aspects of a culture, these two spheres being demarcated by whether or not these values are brought into a relationship with the 'spiritual' plane of existence in which superhuman power, knowledge and ethical values are brought into a confrontation with human weakness, ignorance and sin (cf. again Geertz 1973: 100). The forms and emphases which both the religious and non-religious spheres manifest in practice, however, are governed to a considerable extent by the underlying motivations in the culture, but at the level of moods and motivations itself the 'religious'

---

(23) The original version reads 'in which the vision guest practices the Plains Indian' but this appears to be possibly a printing error; in any case, the sense is more comprehensible when the nouns are reversed, as above.

and 'non-religious'[24] aspects of life are inter-woven and penetrate each other so deeply that it may be impossible to distinguish their boundaries[25]. An examination of underlying motivations therefore provides a more holistic view of society and religion than those which focus on the specifically 'religious' dimension because these underlying motivations provide a continuing sub-stratum beneath the surface changes in society[26]. They are discernable in a myriad of arrangements and patterns which may at first appear to be fragmented and subject to rapid changes in their visible arrangements. However, like a kaleidescope, those complex patterns are composed of essentially a handful of elements which are reflected and 'transformed' in a variety of ways to produce the visible image which may appear to be 'complex' or 'fragmented' at first, depending on the observer, but which soon shows some structure and pattern.

---

(24) The term 'secular' tends to imply that which was once, in some sense, 'religious' but is no longer so, whereas such an idea is avoided in the neutral term 'non-religious' (cf. Tamaru 1979: 91). Spae (1971: 53-4), for example, calls secularization a 'gradual', historical process by which intellectual, social and political activities, formerly exercised by religion, are withdrawn from its control'; Wilson (1976) sees it as the dissolution of 'community' into 'society' while Acquaviva (1979) calls it the 'decline of the sacred', all suggesting an historical process of secularisation.

(25) The boundaries are impossible to distinguish when looking from the outside in because they then appear to merge, whereas looking from the inside out these distinctions have not yet been made; they are only gradually demarcated from one another as they move towards the surface forms.

(26) By grafting Parkin's (1976) notion of key words onto the distinction between moods and motivations made by Geertz, I am in effect arguing that these not only illustrate basic cultural concepts such as that of '<u>seishin</u>' discussed by Moeran (1984) and Befu (1980) but also lie at the heart of some other anthropological concerns such as 'ethic identity' or the meaning of 'culture' - that is, a continuing 'hard core' of culturally important symbols, motivations or concepts which in some sense distinguish groups and also unite groups through the sharing of some common 'identity', 'culture' or 'spirit' (<u>seishin</u> in Japanese). Values which overlap with those of other groups may be used to form a basis for alliances - the 'us' and 'them' of Capitalism and Communism, for instance - but other values not shared may be used to form distinctions, as in the characterisation of Japanese society as a 'group' society versus a supposedly individualistic Western society.

However, an understanding of the kaleidoscope comes not from examining the interesting surface patterns and their many changes (equivalent to historical studies of religious sects and texts) but from an understanding of the process of transformations (through mirrors) which produce such patterns from the arrangement of essentially a small number of beads. The beads differ in colour, and so do the basic motivations of religious and social life; sometimes the colours may shade into one another but at other times very different colours may be juxtaposed with one another. Yet from an understanding of the beads and of the mirrors can be derived a better comprehension of the surface patterns.

The present study is specifically concerned with the 'religious' sphere of Japanese life, but in order to demonstrate the wider ramifications or applicability of some of the basic motivations discovered in the analysis of 'practical' religion, a few examples, by no means exhaustive, will be given of 'non-religious' manifestations of the same motivations. Of necessity, these examples have to be brief and might appear to be relatively superficial observations culled from a variety of aspects of Japanese life, but there are so many consistencies in these diverse manifestations of basic motivations that it seems highly unlikely that this multitude of manifestations or examples is a product merely of 'chance' with no basic continuity between them[27]. A geologist who finds outcrops of rock bearing the same petrological, palaeontological and stratigraphical features in several places in the same district assumes there is a definite relationship between these out-

---

(27) These 'motivations' or 'key themes' constitute the chapter headings of Part II. So, for example, instead of discussing only ancestral rites and the part played in them by the underlying theme of 'memory' some reference is made also to 'non-religious' manifestations of this 'motivation' such as the Japanese use of photography.

crops even if he cannot perceive directly the strata in between the outcrops which may be covered by vegetation or buildings: so too 'outcrops' of motivations or attitudes displaying the same features which occur in the same 'district' (in this case, Japan) but in one locality seem to be manifested in a 'religious' guise and elsewhere in a 'non-religious' form are like outcrops of rock which have been weathered by erosion into different shapes to a degree that their common composition may at first go unrecognised.

Analogies could be multiplied but, no single analogy being perfect, one more is sufficient to describe the relationship between moods and motivations: moods could be compared to hormones, which can regulate certain processes in the body, depending upon the relative intensity or concentration of the hormones, sometimes two or more working in a complementary fashion in the same process, whereas motivations are more like enzymes which can act in the creation of complex proteins and (often by a linked succession of enzymes) can serve to manufacture definite chemical compounds for specific purposes in the body. Enzymes tend to have a directional, specific task to perform whereas hormones (often carried by the bloodstream throughout the whole body) have more of a regulatory function upon the level of activity of certain organs. However, both enzymes and hormones are the products of other even more fundamental processes involving the interaction between D.N.A. and various types of R.N.A.: so also the 'moods and motivations' are products of various basic 'symbols', according to Geertz, but in the biological analogy there are not only even more fundamental units - the base codons of the D.N.A. - but also questions of how these were programmed in the first place. However, the tools of the social sciences are too crude and clumsy to analyse any deeper than the 'enzyme' level at present; if the 'enzyme' level requires an analysis of deeper motivations and

attitudes than those found in any one sub-section of the social sciences (e.g. religion), then an analysis of deeper levels may require a fuller understanding of the nature of man possible only through an even more holistic approach incorporating both social sciences and other disciplines as diverse as Biology, Psychology, or Theology to fully come to terms with the nature of man.

If the approach adopted which has been outlined above bears resemblances to structuralist theory, this is largely a product of the need to find a theoretical model which fits the available data. Resemblances to structuralism are more with the linguistic theories of Chomsky (e.g. Chomsky 1965) than with the structuralist theories of Levi-Strauss (e.g. Levi-Strauss 1963) who tends to view society in terms of binary opposites such as 'nature' vs. 'culture'. Rather, the model adopted in the following chapters focusses on four main 'motivations' behind Japanese religiosity and some of the principal interactions between them rather than sets of binary oppositions[28]. Moreover, the four motivations which influence most religious structures are by no means an exhaustive list of motivations for Japanese society as a whole but are simply those most relevant to the religious sphere[29]. However, these do undergo certain 'transformations' somewhat analogous to those of transformational grammar, as will be indicated in Part III, through the agency of kinship (birth order) or life-cycle crises (illness) which tend to channel the basic motivations into even more specific directions -

---

(28) However, at least two of the basic motivations could be sub-divided into the binary and complementary opposites of purity/pollution or safety/danger.

(29) The 'deep structures' of structuralism are presumably somewhere below this level, perhaps at the level of D.N.A. in the analogy, but even then there are deeper metaphysical or theological questions about how the codons were programmed in the beginning.

rather like the chain of processes in an enzyme pathway which can be triggered off by a single activator but which ends in the creation of a protein compound far more complex than the original enzyme. To some extent, these 'transformations' of 'motivations' in the social system are influenced by external 'triggers', conditions which set off the chain reaction just as sunlight from the outside triggers off an enzyme reaction within the body which produces melanin. The end result of all these social transformations produces some surface patterns and behaviour which could be labelled 'religious'. (Some examples are presented in Part IV, but it is this level that many books on Japanese religion have analysed in detail already). In the 'definition' (or rather, description) of religious processes given by Geertz (1973: 90) it is only at stage three - the 'conceptions of a general order of existence' - that the area of 'religion' as such becomes differentiated from other types of symbols, moods and motivations. It is at this level that man's ignorance, weakness and sin are brought into contact with a spiritual order of existence. This order is essentially superhuman and involves a differentiated spiritual plane which in moral terms involves specific choices between good and evil (or 'right' and 'wrong' in practical everyday life) and between recourse to legitimate versus illigitimate sources of spiritual power[30]. The fact that these are conceived of as being outside of the human sphere and in some sense more powerful than man means that man's response to these concepts are observable without having to ask about the ontological 'existence' of these 'spiritual' entities[31]. There is no ground for arbitrary assump-

---

(30) Even in those religions without formal moral codes the distinction between legitimate and illegitimate power holds in relation to witchcraft and magic in at least some of their diverse manifestations. Possession by evil spirits or certain types of misfortune can also be seen as the work of illegitimate spiritual forces.

(31) Southwold's (1983: 85-96) discussion on the meaning of the word 'exist' may be pertinent here.

tions about the existence or non-existence of these entities (such as those made by Durkheim 1918: 69-70, 345, 348), and so the social scientist needs to be content with observing man's response to this supernatural sphere rather than trying to 'explain away' the spiritual level of existence by assumptions lying outside the sphere of competence of the social scientist.

Methodology

The data presented in the following chapters was collected during two field trips to Japan, the first from March 1981 to May 1982 and the second from May 1983 to May 1984. During the period between the field trips the initial data was analysed and preliminary findings were written up, but on the second field trip more detailed questions arising out of the initial analysis could be pursued in depth and some of the lacunae in the original data could be filled.

During both field trips the primary research method was participant-observation through living in one of the areas being studied[32]. This was supplemented in November 1982 by a detailed questionnaire which was subsequently processed through a computer at the National Museum of Ethnology in Osaka. The questionnaire was administered a little differently in the two areas studied owing to the fact that one of them consisted of company housing exclusively for the employees of a local factory. Before the questionnaire could be administered it had to be approved by the personnel office in the factory. Once their

(32) The other area consisted of company housing for the employees of a large local factory but company rules prohibited non-employees from residence in the firm's housing; to allow an exception for a relatively unknown foreigner on his arrival in Japan would have set a precedent by which others might try to rent the housing reserved for employees only.

permission had been given, they volunteered to distribute and collect it on behalf of the anthropologist because they considered that a higher response rate would thereby be obtained. This involved explaining the procedure to the head of the local neighbourhood council (jichikai) for the company housing, who later explained it to the representatives of each block in the neighbourhood, who conducted the actual distribution and collection of the survey. Somewhere along the lines of communication there seems to have been a misunderstanding because some households received two questionnaires but others received only one. (The original intention was for both husband and wife to fill in separate forms). In most of those households receiving only one form the husband filled it in, partly as head of the household and partly, it seems, out of responsibility to the firm as part of the obligations involved in his employment. This resulted in a bias in favour of male respondents in the sample for that area. According to official company figures, the questionnaire was distributed to 387 households; some questionnaires had to be discarded because of too many blank questions but the overall response rate in terms of usable sets of replies amounted to 65.4% of the households sampled[33].

In the adjacent estate of privately owned houses (where the men work for a variety of different firms), the local jichikai was approached but they refused to co-operate in the same way as the first jichikai, on the grounds of not wanting to take official responsibility for something which was not part of their designated area of jurisdiction and did not come officially from any town hall directive or recommendation. The questionnaire was therefore distributed personally to each household, with the aim of presenting two questionnaires to each, one for each spouse. In practice there was a greater tendency for husbands to refuse

(33) The initial response rate was over 70% of the households, but some forms with too many blank responses were omitted from the sample used for analysis.

(or for wives to refuse on behalf of the husbands) on the grounds that the men were too busy, or, in some cases, were away on extended business trips or company duties elsewhere[34]. This gave a slight bias towards female responses, although in the majority of households both spouses co-operated. In a few households where there were other co-resident adults willing to co-operate (such as a parent of one of the spouses or adult children), extra questionnaires were distributed in addition to the usual two. About two weeks later the questionnaires were collected again, in some cases calling back once or twice more, although many delivered their forms before then to the anthropologist's home[35]. The response rate in terms of households is difficult to assess too precisely because several homes were only intermittently occupied (as second homes) or were unoccupied because the owners had gone abroad or to another part of Japan on account of their work but intended to return to the area (or else returned for short visits once in a while). However, allowing for uncertainties in counting the number of households actually 'resident', the percentage of the officially registered households (in terms of the figures held by the town hall, shiyakusho) who were represented in the questionnaire came to 80.8%, while the percentage of (estimated)

---

(34) Many of those who refused were people who did not answer the door-bell personally but answered via an intercom at the gate and simply refused in probably the same terms they refuse most salesmen. One notable exception was a woman who was well known in the neighbourhood and who came to the door personally but who refused on the grounds that the anthropologist was living in the same area rather than far away. Presumably she was afraid of any leaks of confidentiality despite the anthropologist's promises to maintain confidentiality.

(35) I would like to take this opportunity to express my thanks to such people for their helpfulness.

'permanent' residents was about 85%[36]. Overall, in this area there were 195 male and 205 female respondents, the figures for the company housing being 214 and 53 respectively. The age range of those sampled is from 20 to 85 years of age.

While the questionnaire data was being processed at the Museum of Ethnology, interviews were conducted with 70 people, or just over 10% of the 667 people who filled in usable questionnaires. While these were not chosen on a strictly random basis (because certain individuals were chosen because of either 'very religious' or 'very non-religious' impressions received from their questionnaires, in order to include both extremes) most were selected in a fairly random manner - their inclusion being affected by a variety of circumstantial factors such as degree of friendliness or co-operation expressed during the distribution and collection of the questionnaire, personal contacts, and the desire to include as wide a variety of informants as possible. The criteria for 'randomness' in this relatively small sample in which the distribution of replies by sex in the two areas had already been a little distorted are hard to evaluate, but the anthropologist's subjective impression from the interviewed sample is that it does constitute a fairly representative sub-section of the original 667 respondents. Those interviewed include many who could be subjectively assessed as 'religiously indifferent', who occasionally participate in rites out of 'custom' (or 'sightseeing'), a minority of 'non-religious' who seemed generally quite cynical towards most religious phenomena, and another minority of 'religious' or 'very religious'

---

(36) One house was let out to four students who all filled in questionnaires but as they had no kinship connection between themselves they were counted as four households when the data was processed into the computer. In the above assessment of response rates, however, they are counted as one household, and similarly for some of the data by households in chapters 3 and 6.

people who seemed to be heavily involved in various cults. However, unlike Basabe (1968), these labels will not be used in the preliminary categorisation of the sample because of the difficulty of weighting various aspects of 'religiosity'. Rather, more attention will be paid to the attitudes and 'motivations' expressed by the informants as to why they participate in religious activities: such attitudes could not be deduced beforehand from bare facts on the questionnaire such as possession of a Buddhist altar or of a safety charm. The answers to a number of questions also asked in the interviews (such as those on types of marriage in terms of 'arranged' (miai) versus other types) seem to have relatively little correlation with other questions asked in the questionnaire on religious practices, and as such these are likely to constitute a more directly 'random' sample.

During the second period of fieldwork some of these informants were questioned in more detail, and an additional 30 were interviewed. Whereas the first 70 interviews tended to be relatively formal and included set questions, the later 30 interviews were relatively informal and allowed for deeper discussion on relevant issues and for further probing into aspects of particular interest (or areas which had not been covered sufficiently by the earlier interviews, lacunae which were revealed by the subsequent analysis in England). Therefore some of the figures given for interview data are from a sample of 70 and others from a larger sample of up to 100[37]: the sample sizes will be indicated in the appropriate places. In addition to these, about 20 other men involved in rites at the local factory were interviewed about their attitudes to such rites, and interviews were conducted also with two local Shinto priests, one local Buddhist priest, and the leader of a local Buddhist lay movement.

---

(37) These thirty interviews during the second period of fieldwork were structured but took the form more of a long conversation than of question and answer sessions. Therefore some questions were omitted in some interviews, the sample size for some items is less than 100.

Participant-observation techniques in an urban setting tended to concentrate on about six families in depth, in the same manner as that adopted in a similar situation by Vogel (1963: 285). Information on these six families includes many kinds of data (such as attitudes to child-rearing, family relationships, employment conditions and many other facets of daily life) which were not asked of most of those interviewed. These six families therefore constitute a 'core' of people about whom detailed, in-depth information was obtained. Radiating out from these are other concentric circles formed by the 30 people interviewed during the second fieldwork period, the 70 interviewed more formally in the first period and the 667 questionnaire respondents. The inner circles emphasise depth and the outer ones breadth. A combination of the insights obtained from all these 'circles' constitutes the data for the findings presented in the following chapters.

Note on nomenclature

Confidentiality was promised to informants regarding information they regarded as private, such as income, savings and mortgage payments, whether or not they had received university education, domestic crises, aspects of their personal life histories, moral attitudes and tax avoidance[38]. Therefore it has been necessary to adopt the common anthropological device of using pseudonyms. Since the area in which the research was conducted could be fairly easily located if the actual names of the city and of the firm owning the company housing were revealed, pseudonyms have been used for these as well as for people. Occasionally a few minor alterations in details (such as those regarding inheritance or some specific identifying details such as places of origin of certain

(38) Details of education and some questions on moral attitudes were included in the questionnaire but on the computer tape people were listed by a code number rather than their names.

individuals) have been considered necessary in order to preserve confidentiality, but the essential data regarding religious attitudes and how these may correlate with other social variables such as age, sex, income, style of housing or rural/urban background, have been retained intact.

The normal terms of address and reference for adults (outside of family and close friendship circles) are surnames plus the suffix -san[39], equivalent to 'Mr.', 'Mrs.' or 'Miss'. In accordance with Japanese practice, the use of surnames has been considered more appropriate than using personal names, but the ambiguity of the term -san has been avoided by using the prefixes 'Mr.' and 'Mrs.' except for some individuals whose identity is clear from earlier references in the text. This does give rise to a somewhat formal style in English, but the indication of a person's sex in this manner is considered to be more important in the present context (for an understanding of personalities) than stylistic considerations[40]. Since several case studies of particular individuals or families will be presented in the text, and occasionally reference may be made back to such people again, the use of such names is important for indicating salient links or continuities in individual attitudes in different contexts.

---

(39) There are a few varients on this, such as -sensei ('teacher', used often as a term of reference for someone in an academic or pedagogical field, including Christian pastors and missionaries - cf. the Jewish term 'Rabbi' - and as a term of address by anyone receiving instruction from another person), or -kun, used by men to address or refer to younger men with whom they are on close terms.

(40) The use of personal names would be even more ambiguous for most readers unfamiliar with Japanese names. (Although many female names do end in -ko or other common suffixes, many others are ambiguous).

A note on statistics

The original computer tape for the questionnaire is still held at the National Museum of Ethnology in Osaka, but for the sake of confidentiality the names and addresses of informants were not put onto the tape. This tape is available for the use of other researchers who need to consult it for comparative purposes, and therefore it has been considered unnecessary to provide full statistical details on all the practices described in the following chapters. Where relevant, statistics are employed to indicate pertinent correlations by sex, age or other variables, but have been omitted where they are not considered relevant to the main thrust of the argument or description. In most chapters more attention is paid to the attitudes and motivations behind the behaviour (as elucidated in the interviews) than to the statistical frequency of such behaviour, but some use of statistics derived from the questionnaire is also considered to be necessary in certain chapters. In fact, the subsequent interviews revealed a number of lacunae in the original questionnaire, a few mistakes[41] in peoples' answers, or deliberate concealment of practices embarassing to the informant[42]; nevertheless, these were so few that statistical correlations based on the survey data are unlikely to be affected by such minor deviations.

Where statistical correlations are used, the significance levels employed are the same as those used by Dore (1958: 10), whereby levels of

(41) These are likely to cancel each other out in overall statistics.

(42) Two cases were revealed during interviews in which informants had consulted a medium or the equivalent of Ouija boards (Kokkuri-san) but had not admitted to these in the questionnaire. In one case the informant mentioned it during the interview after he had relaxed and begun to discuss his activities more freely, and in the other case the anthropologist's suspicions were raised by conspicuous blanks in the questionnaire form.

0.05 or less, indicating that a correlation has a one in twenty or less chance of being due to chance, are regarded as statistically significant. Levels between 0.2 and 0.05 are regarded as statistically noticeable, whereby a significant correlation may be obscured by the small sample size but in a larger sample might prove to be significant.

A note on Romanisation

There is no universally adopted system of Romanisation for Japanese words but the one used here is that which is probably the most common and which is used by Kenkyusha's New Japanese-English Dictionary (1954), whereby the macrons indicates long vowels (especially long 'o' and long 'u') except that a final long 'i' is usually doubled[43]. However, in accordance with the precedents set by earlier writers such as Norbeck (1970: iv), the macrons are omitted for principal geographical names such as Tokyo, Osaka, Kyoto or Kyushu which more strictly should be written at Tōkyō, Ōsaka, Kyōto and Kyūshū respectively[44]. A more serious problem involves the pluralisation of Japanese words when there are no plural endings in Japanese. Often considerations of English style would require a plural form for a Japanese word used in the text and in these cases a final 's' has been added to the Japanese word, as in hōjis, plural of hōji, a term used for certain types of memorial rites. In other cases, however, it would seem to be more appropriate to leave the Japanese word as it is, despite a plural meaning, if there is a numerator indicating plurality (such as when referring to a certain number of ihai (memorial plaques) in a Buddhist altar). Abstract nouns are treated

(43) This is a modified version of Hepburn's (1867) Romanisation, the modifications including changes such as mitsu for 'three' instead of mitsz (Hepburn 1867: 278) or mizu for 'water' instead of midz (ibid., p. 271).

(44) Similarly, 'Kenkyusha's Dictionary' ought to be transliterated as 'Kenkyūsha's Dictionary' but the dictionary itself omits the macron on its title page.

in the same manner[45]. The Glossary gives the original ('singular') forms of all words used more than once in the text, and a translation or explanation of each word is given when it first occurs. Honorific prefixes (usually o- or go-) are not normally used but if considered appropriate in a particular context are separated from the main stem by a hyphen.

A brief note of explanation may also be required regarding the Japanese word for white-collar employees, sarariiman. It is a Japanese term derived from the English loan-words 'salary' and 'man', and some writers such as Vogel (1963: 5, 6, 7 etc.;) or Woronoff (1982: 176) have borrowed the word back into English as 'salary man' or 'salaryman'. Rather than using the Japanese term sarariiman in what seems a rather artificial or pedantic manner, it seems more appropriate to follow these procedents and use the word 'salaryman' as an English word, pluralising it where necessary to 'salarymen' (used also by Woronoff 1982: 176, 275 etc.).

Other Japanese terms used in the text are underlined except for some words which have become Anglicised, such as 'kimono', and 'judo', or the names of people, places or well-known firms[46]. Words such as sake (rice-wine) or sumō (Japanese wrestling) are given initially underlined in their Japanese forms but as these are also Anglicised (but less commonly known than words like 'kimono') some of the later usages treat them as English words.

---

(45) There is probably some influence from Japanese usage in the decision about which nouns to pluralise by an 's', in that the presence of a numerator automatically indicates plurality.

(46) The pseudonym adopted for the company mentioned in the following chapters is treated in the same manner.

Acknowledgements

A piece of research such as this which emerges as if the work of one person is in reality a composite effort assisted along the way by many different people, their individual contributions acting like many tributaries flowing into a river which finally empties itself into the ocean of academic knowledge. In a situation like that of Lake Biwa in Japan (into which flow many tributaries which mingle in the lake with the rain which falls directly onto the lake from above, before the waters eventually flow out of the single outlet of the lake to supply the drinking water of Osaka), it is clear that the catchment area is so great that an ennumeration of all the sources of water is liable to overlook at least some of them. So it is with the present work. However, I would very much like to express my sincere appreciation and gratitude to those people and institutions which can be identified as 'major tributaries' contributing in a significant way to the final result.

Firstly, I would like to thank the Social Science Research Council of Great Britain and the Japan Foundation for the funding which made possible the first and second field trips respectively. During my first period of fieldwork I was attached to Kyoto University as a 'Visiting Scholar' under the supervision of Professor Toshinao Yoneyama (47) and during the second period of fieldwork, while in receipt of a Japan Foundation Dissertation Fellowship, I was affiliated with the National Museum of Ethnology in Osaka as a 'Visiting Fellow': I would like to express my appreciation to both of these institutions for all the facilities and help made available to me. In particular I would like to thank

(47) The surname is placed in final position in accordance with English usage, rather than in initial position as in Japanese usage, in all the Japanese names mentioned in this section.

Dr. Katsuyoshi Fukui and Dr. Hirochika Nakamaki, both of the National Museum of Ethnology, for arranging for my questionnaire to be processed through the Museum's computer and also to thank Mrs. Hiromi Nakano (née Ueda) for all her work in preparing the data for the computer and programming it for me. My thanks also go to Miss Margaret Irvine of the Research Support Unit in the Faculty of Economic and Social Studies at Manchester University for her help with various additional correlations from the computer data.

I am very grateful also for the comments and suggestions regarding an initial summary of my ideas which I have received from Professors Margaret Lock, Harumi Befu, Toshinao Yomeyama and Takao Sofue, and for the valuable discussions with them about some of the issues raised by my approach. In the same way the written comments on my ideas from Dr. Brian Moeran and Mr. Eyal Ben-Ari have also been greatly appreciated. Most of all I would like to express my gratitude and appreciation to Dr. David Turton for all his help, advice, encouragement and constructive criticisms of my research throughout the whole period from the initial preparation for the first field trip to the final writing up of the completed results.

In many practical ways I have been assisted by Mr. Eisei Kurimoto and Dr. Patrick McElligott: in particular I would like to thank the former for his help with my initial contacts with the personnel division of the company I am calling Nissei, and the latter for his help in translating the literary Japanese forms and expressions used in the Nissei company song (quoted in chapter 12).

My sincere thanks go also to all those in the Nissei company who helped me with my research in so many ways and who so willingly gave of their time to answer my many questions, assisted me in the practicalities

of the distribution and collection of my questionnaire, and who were so co-operative in allowing me to accompany them and observe their actions during religious rites relating to their factory. In the same way I am deeply grateful to all those in the fieldwork area who opened up their private homes to myself and my wife, offering us hospitality and friendship, and in some cases opening up their inner thoughts and feelings to us, opening their hearts as well as their homes. My use of pseudonyms prevents me from divulging their real names, but prominent among them are those I have called Mrs. Kimura, Dr. Satō and Mrs. Tsuchida.

Finally, my wife Ruth deserves a special mention for all her help and encouragement throughout all the research, in the earlier stages helping me linguistically and in the later stages psychologically through all her support and encouragement to me in this research.

View over Ueno City showing Aoyama-chō on the left, the Sakurano apartments in the centre and the Nissei factory partially visible on the right.

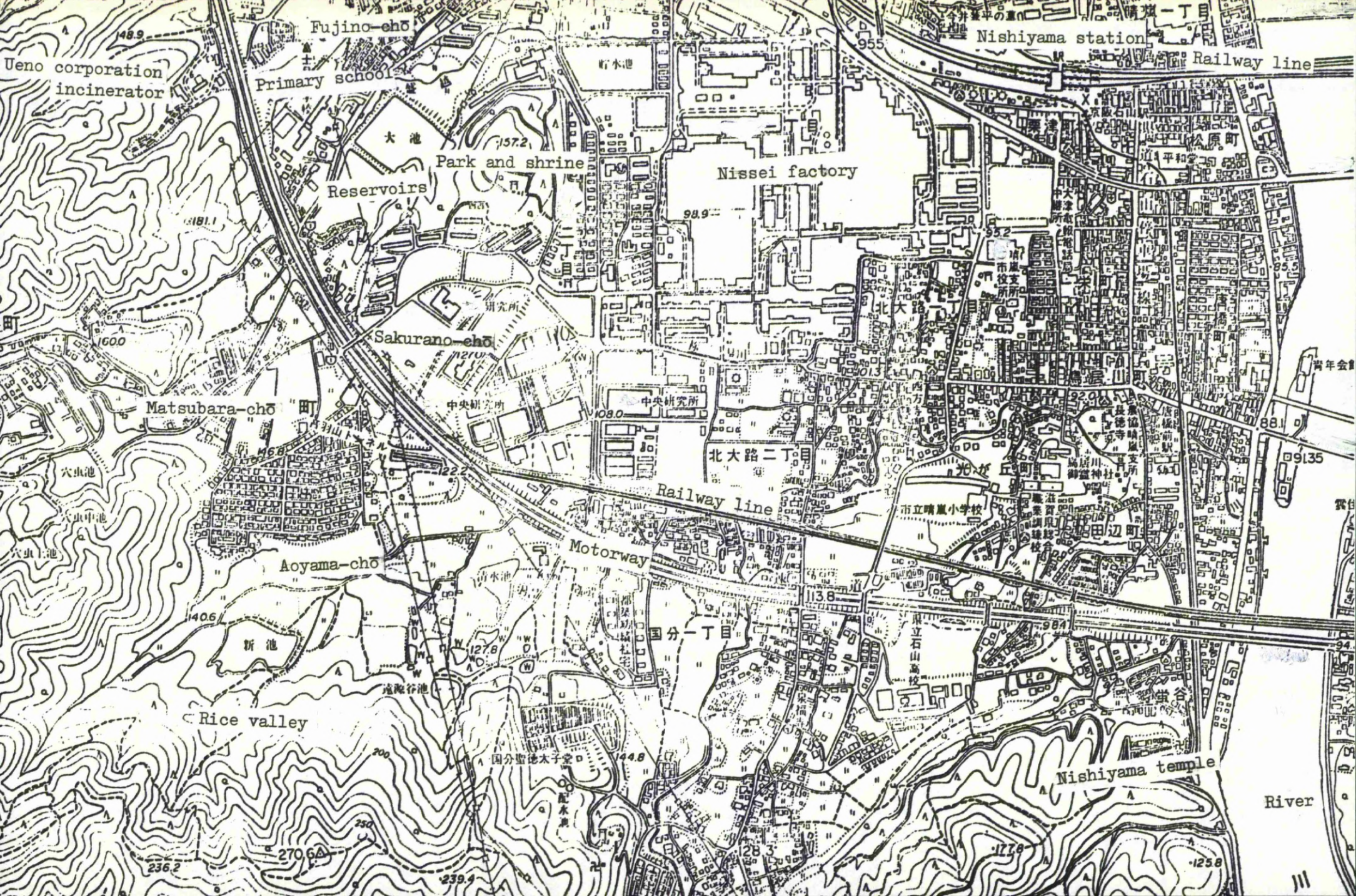
Ueno corporation incinerator
Fujino-chō
Primary school
Nishiyama station
Railway line
Park and shrine
Reservoirs
Nissei factory
Sakurano-chō
Matsubara-chō
Aoyama-chō
Railway line
Motorway
Rice valley
Nishiyama temple
River

CHAPTER 2

THE SOCIAL SETTING

Connected with the major cities of Osaka, Kyoto and Kobe by main road and rail links, the city of Ueno in the Kansai region of Japan, with a population of over 230,000, is partially a dormitory city for these larger centres but also contains some major industries of its own.

On the western side of Ueno City lies a suburb called Nishiyama. In this region several streams have cut small valleys into the mountains above the river, which in this area widens from a gorge through the mountains to a broader, more sluggish river on the banks of which is Ueno City. The Nishiyama district, however, was relatively sparsely populated up until the early twentieth century - the area containing some scattered farm houses, a Buddhist temple and a few shops - but this situation was rapidly altered by the construction of a large factory in 1926. It was then that the valleys behind the factory became important for building land as the firm's employees, many from outside the area, sought local housing.

From the outset the company, Nissei Industries, provided housing for at least some of its employees - mainly technical staff who had come from outside the area whereas many of the blue-collar workers were recruited locally and travelled from the older parts of Ueno on the recently established railway.[1] Just behind the Nishiyama factory is a

(1) Later a number of blue-collar employees were also accommodated in company housing which, owing to rising standards of living, became no longer suitable for white-collar employees. The factory at first employed 10,000 people but more recent mechanisation has reduced this to about 4,000, including an increasing number of blue-collar employees recruited from more distant, often rural, areas of Japan.

low hill, the site of several tumuli from the Kofun period (300-710 A.D.), which is crowned by a grove of cherry blossom trees where the company established its own Shinto shrine dedicated to the god Inari, the patron of business and traders. Four other local shrines dedicated to different gods and goddesses were already established on the hillside, their dates of origin largely unknown, which lacked any permanent priesthood but were visited by the local farming population for specific purposes such as to ask a goddess to grant children to a childless couple. Between the base of this hill, called Sakurano, and the factory wall Nissei constructed in 1926 a number of wooden houses, each with a small garden, of which about 100 still remain: others have been replaced by two blocks of flats and a car park. From the early 1960's the area of company housing was expanded with the construction of apartment blocks around the sides of Sakurano hill itself, plus a dormitory for single men and some semi-detached modern houses for section managers (Kachō) on the lower slopes of the hill facing the factory.

In the meanwhile Nissei employees who had formerly lived in the company housing (Shataku) had been buying land and building houses in the adjacent areas of Fujino and Matsubara.(2) Employees of other firms, particularly of two large electrical manufacturers which had subsequently opened factories in the Nishiyama area, also began to move into these areas, in addition to many families from the older parts of Ueno City who began to move into the suburbs where land was relatively cheaper. In 1973 a big development company bought the hillside where Aoyama-chō(3)

---

(2) The population of these areas in 1984 had grown to:
Fujino: 2,829 people in 946 households
Matsubara: 829 people in 233 households.

(3) The suffix - chō means 'ward' but for the sake of brevity will usually be omitted from the designation of names in the text, where Aoyama, Sakurano, Matsubara and Fujino will stand respectively for Aoyama-chō, Sakurano-chō, Matsubara-chō and Fujino-chō.

now stands, then sold off the area as individual housing plots on condition that the buyers initially buy their homes from that company. They were given a choice of a range of pre-fabricated houses, the only exception being the original owner of the land who could choose his own style of home. The first residents of Aoyama moved in in 1974 (142 households); the following year there were 269 households and in 1976 there were 308. Some of these homes were bought as second homes by people who lived in the area for two years and then moved back to their original home, so from 1977 onwards the number of households has fluctuated between 270 and 281. The population over these years has fluctuated between 975 and 1,048.

The Sakurano shataku population rose during the 1960's, with the construction of the new apartments, from 291 households in 1964 to 409 in 1968 and 593 in 1972. The population fluctuates according to patterns of transfers within the company from one plant to another, the size of shataku families, and the extent to which families buy their own homes elsewhere. Table 2.1 summarises these patterns. Since most of those moving into the shataku are young couples without children but those moving out are older families with children, the rate of increase in population is not as great as the rate of increase in households:

Table 2.1 Population growth in Aoyama and Sakurano[4]

	Aoyama		Sakurano	
Year	Households	Population	Households	Population
1964	-	-	291	1,102
1968	-	-	409	1,514
1972	-	-	593	1,740
1976	308	952	569	1,889
1980	274	1,024	538	1,659
1984	278	1,058	581	1,746

Sakurano and Aoyama have been chosen as fieldwork sites because they constitute relatively clearly demarcated neighbourhoods in geographical terms. A common problem in urban anthropology is that of delineating a boundary between included and excluded population samples when multi-faceted social relations often extend far beyond the boundaries of the local neighbourhood itself[5]. Two other approaches to urban anthropology are those which focus either on ethnic groups (or other 'marginal' groups such as outcastes) or on an occupational group (Eames and Goode 1977, chapter 1). The latter course has been adopted in a Japanese context by Haak (1973) and Rohlen (1974). A study of a shataku community like Sakurano therefore combines both an occupational and a neighbourhood group into one, and as such it approximates more closely to the rural 'community' traditionally studied by anthropologists.

Only one of these links, that of neighbourhood, is common to the residents of Aoyama-chō however, but its boundaries are clearly demarcated by the motorway, rice valley and forested mountainside. A comparison between the two areas therefore indicates some of the influences upon social relationships in Sakurano exerted by working for the same company.

Nissei Industries

This company was founded in 1926 as a subsidiary of the Mitsui conglomerate but has now grown to become the leading manufacturer of

---

(4) These figures are taken from the statistical year books (tōkei nenkan) for Ueno City at four year intervals. Since Ueno is a pseudonym the full title of the statistical yearbooks has been omitted.

(5) Rural ethnographies generally give the impression that most social relationships are confined within the village itself but this impression may be partly a result of anthropological methodology which is more adapted to studying intra-village social relations than those involving wider social contacts (with the principal exceptions of warfare and institutionalised trade).

synthetic fibres in Japan. More recently Nissei has diversified into making other products such as video tape (accounting for about 70% of the tapes produced in Japan, Nissei supplying the base tapes for Sony, TDK and others), plastics, engineering, optical products, pharmaceuticals (including interferon) and durable lightweight panelling for the American space shuttle. Nevertheless, 70% of the firm's revenue continues to come from artificial fibres such as nylon and exsen.

Nissei has 13 factories in Japan plus a number of joint ventures and subsidiaries in over 15 countries of S.E. Asia, Africa, South America and Europe, and offices elsewhere in North America, Europe and Asia. Among its factories in Japan, the Nishiyama complex is the oldest and largest plant, set up in 1926 with the help of specialist advisors and technicians from Britain, Italy and Germany. Originally this plant employed about 10,000 people, a figure which has now dropped to about 4,000 owing to increased automation.

At least 10% of these employees live in company housing (shataku). There are 110 single men living in Nissei dormitories near the factory, plus 124 married men living in dormitory accommodation during the week and visiting their families when they can at weekends: these are men who have been transferred from more distant plants but whose children are at such a critical stage of their education that their chances of examination success would be jeopardised if they were to move. Other men transferred from elsewhere in the Osaka-Kyoto region prefer to commute to Ueno from shataku near those cities. Still others live in private houses owned by Nissei men who have been transferred to more distant areas of Japan or to Nissei enterprises abroad and have taken their families with them, in the meantime renting out their homes to the firm to be used as temporary shataku by other employees. However, the majority of those working at the Nishiyama plant who live in company accommodation are those

who reside in estates of housing specially built by Nissei for its married employees, of which the largest in the Ueno area is the Sakurano complex.

Sakurano-chō

In the narrow strip of land between the rear gate of the Nissei factory and Sakurano hill stand almost 100 old, wooden houses, most of them as old as the factory itself[6]. One of these is used for meetings of the neighbourhood council (jichikai) and for meetings of neighbourhood clubs such as an after-school arts and crafts class for 6 to 12 year olds. There is also a grocery store[7] and a restaurant which can only be used by company employees: the restaurant is one of several canteens around the factory complex and this one is normally used during the week by those employed in the research centre near to the company housing.

These older houses vary in size and in amenities according to the rank in the firm of their residents. Those adjacent to the factory wall itself are occupied by blue-collar workers and have no private bathroom. A bath-house is provided near the factory entrance for these workers and their families to use communally[8]. The blue-collar houses are single-storey wooden structures, some consisting of one room which is 108 square feet in size (12 ft. by 9ft.), two rooms of 81 square feet (i.e. 9 ft.

---

(6) Some of them were used by the British, Italian and German specialists who helped to set up the factory in 1926-7.

(7) This is used more by those in Sakurano who live nearer the factory whereas those further away sometimes use a shop at the entrance to Aoyama. There is also a shop within the factory itself for employees and their families selling at a discount a wide range of goods produced by Nissei, especially by this factory, such as clothing, carpets or sunglasses and many other products such as cosmetics and confectionary bought from other firms but sold with a low profit margin.

(8) Such public bath houses are not uncommon in older urban areas and in rural areas and provide a nexus for social contacts and gossip (cf, for example, Hendry 1981:41).

square), a kitchen which has an even smaller area (about 54 square feet), an entrance-way of about 36 square feet[9], two floor-to-ceiling cupboards each about 3 ft. deep and 9 ft. wide, a squat-style flush toilet, small washbasin room, connecting corridor between the rooms, and a verandah leading out onto a small patch of garden (see Fig. 1). Others have just two living rooms (one of 81, the other of 144 square feet) plus an outside toilet and store room (monooki) (cf. Fig. 2).

Further out from the factory are larger, two-storey wooden houses for section managers (kachō). These have larger gardens, private bathrooms, larger kitchens and considerably more living space: 450 square feet as compared to the 270 or 225 of the blue-collar workers. Some kachō also live in modern semi-detached two-storey houses further up and around the hillside which have almost the same living space, but less of it downstairs and more upstairs. A few two-storey plastered houses for departmental managers (buchō) and their families have considerably more living space, ranging from 630 square feet upwards, plus garden and parking space[10], and are located a little further up the hillside and away from the factory than the kachō wooden houses, separated from the latter by the main road encircling the factory. All these houses for managers have either their own parking spaces provided adjacent to the houses (for the newer kachō semi-detached houses and the few buchō homes) or nearby in a car park. Separate parking areas are provided for those lower down in the company hierarchy.

---

(9) These areas are converted from the Japanese terms which describe rooms in terms of the number of straw tatami mats, each of which is about 3 ft. by 6 ft. or 18 square feet. Hence a 6-mat room has a size of 108 square feet and a 4½-mat room has 81 square feet. The measurements of rooms without mats, such as kitchens, have been estimated by comparisons with those containing mats.

(10) The smaller buchō houses contain 630 square feet of living space in addition to the dining-kitchen, bathroom and toilet areas, plus a garden and parking area; the size of the whole plot is 150 sq. metres. Larger buchō houses have a total plot of 200 sq. metres, most of which is devoted to extra garden and parking space but some to larger living space.

Fig. 1. Wooden-type house of blue-collar worker. (Type 1)

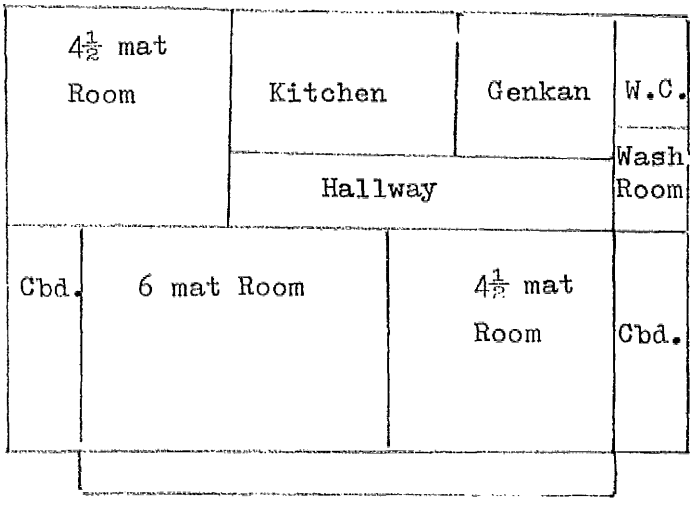

Abbreviation: Cbd. = Cupboard.

Fig. 2. Wooden-style house of blue-collar worker. (Type 2)

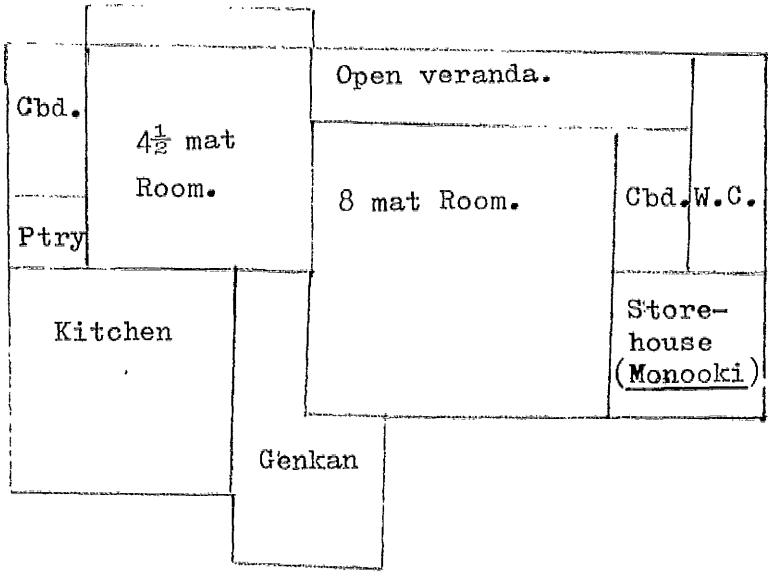

Abbreviations as for Fig 1 plus Ptry = Pantry.

Further up the hill and adjacent to the road leading to Aoyama are most of the apartment buildings, though four blocks are on the other side of the hill beyond the reservoir (see map). These are divided into two types, designated A and B: the latter are a little larger than the former. Those in the 'A' type apartments are 'foremen' (shunin)[11] while those in the 'B' apartments are slightly higher up in the firm's hierarchy as kakarichō, a term translated by Kenkyūsha's dictionary as 'chief clerk' but really referring to a rank in the firm higher than foremen but below kachō, irrespective of whether the man is employed in administrative or production sections of the firm. There are therefore the following status divisions among the residents of the company housing (shataku):

Table 2.2 Status divisions in the shataku

Numbers of households represented in sample		
5	Buchō (departmental managers)	: largest type, 2-storey independent houses.
22	Kachō (section managers)	: large, 2-storey independent or modern semi-detached houses.
94	Kakarichō ('chief clerks')	: medium-size, B-type apartments.
101	Shunin (foremen)	: smaller, A-type apartments.
31	Blue-collar workers	: small, independent wooden houses lacking private bathrooms.

(11) In fact these are mostly blue-collar workers too, depending on their particular departments, but because there are relatively few equivalent titles in English corresponding to the Japanese titles those below foreman level doing 'production work' (seizō no shigoto) are referred to as 'blue-collar workers', although their actual work is not much different from that of many 'foremen'.

Fig. 3. Sakurano 'A'-type apartment.

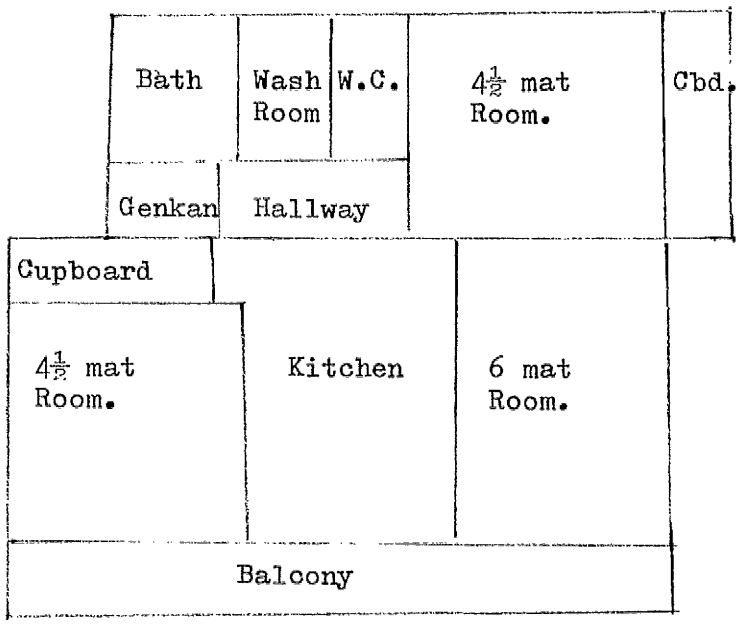

Fig. 4. Sakurano 'B'-type apartment.

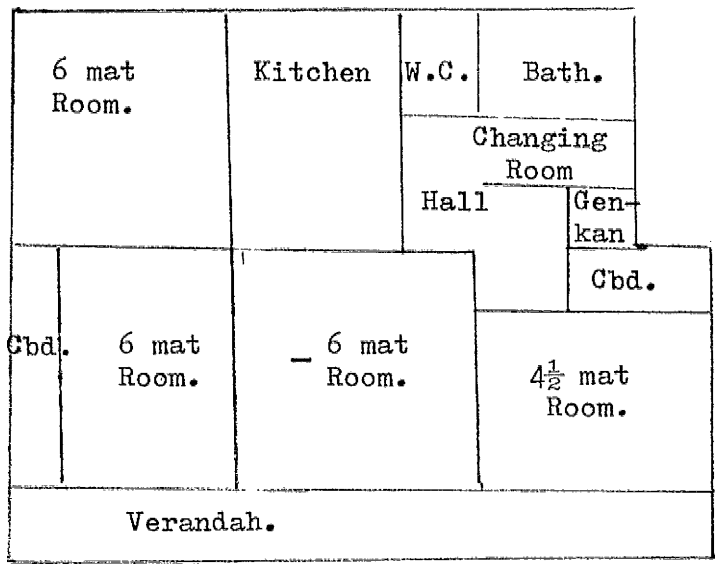

Fig. 5 . Sakurano kachō-type house.

Ground floor.

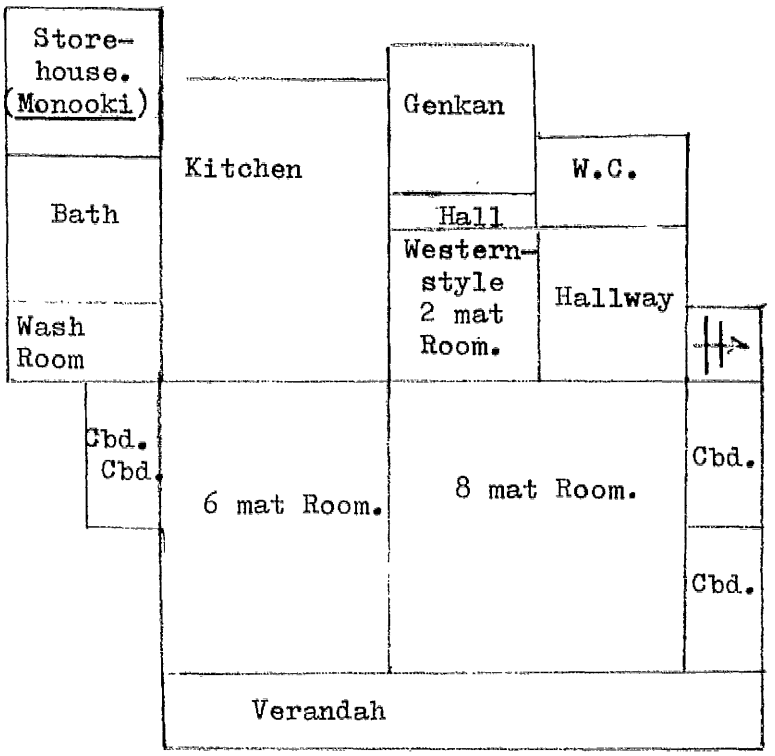

First floor.

Extra Abbreviation:
Tok. = Tokonoma.

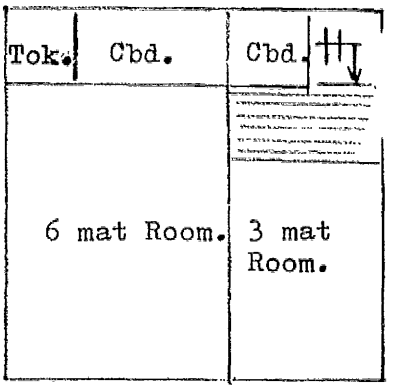

Sakurano men playing baseball in front of apartments.

In the shadow of the Nissei factory lie the older, wooden-style houses of the blue-collar workers.

There are altogether 18 apartment blocks: 10 of the 'A' type for foremen and 8 of the 'B' type for kakarichō, of which four are on the other side of the reservoir and of a slightly different design. The 'A' type contain two 4.5-mat (81 square foot) rooms, one 6-mat (108 square foot) room and a kitchen roughly the size of another 6-mat room, plus bathroom, toilet and washbasin room and a balcony. The 'B' type flats beyond the reservoir are a little larger with an extra 6-mat room, space for a washing machine (at one end of the room-linking corridor) and extra storage space, while the other 'B' flats are marginally larger than these, with a 6-mat room instead of a 4½-mat room and an arrangement by which two adjacent 6-mat rooms can be converted into an 18 ft. by 12 ft. room through the removal of partitioning doors (cf. accompanying plans)[12]. Therefore the living space available in the 'A' type flats (270 square feet) is identical to that of the larger blue-collar houses (whereas others have only 225 square feet), but the flats have a private bathroom. The 'B' flats are larger, with 378 or 405 square feet but these are still smaller than the 450 square feet of the kachō houses. It can be seen from this that not only facilities but also the size of shataku accommodation reflects the status of the men in the company hierarchy.

Although the older houses do have individual patches of gardens, behind the flats there are allotments for those who wish to cultivate them, the area of each plot (about 9 ft. by 12 ft.) being not much different from the size of the blue-collar workers' garden plots. Gardens for those with kachō status are a little larger, those of buchō's larger still (from 30 square metres upwards). The cherry blossom park containing

---

(12) There is a difference on the plans which may or may not be important regarding the word used for the balcony. For the 'A' type flats the loan word 'balcony' is used but for the 'B' flats another loan word 'beranda' (verandah) is used, perhaps suggesting the 'B' flats are of better quality, though the item is the same.

the company shrine is open to all who wish to visit, especially for picnics in April or May when the blossom is out; it also affords a good view over Nishiyama and the river.

All those living in these shataku are married (there being batchelors' dormitories for single men further around the hillside but not included in Sakurano-chō). The average age of the apartment dwellers is in the early thirties, but those in the 'A' flats are more usually in their twenties and those in 'B' flats in their thirties and up to early forties. Kachōs are in their forties and up to early fifties and the few buchōs living in the area are in their early fifties or late forties. Blue-collar workers range from twenties to fifties but only a few are in their thirties or forties. These distinctions reflect promotion patterns in the company: depending on educational qualifications, each worker is in effect on a promotion escalator rising at varying speeds (cf. Rohlen 1974: 146-155; Cole 1971: 101-113; Abegglen 1973: 95-101, 130-134), according to which a man can normally expect to be promoted to a certain rank at approximately a particular age, give or take a few years. Those who entered the company at the same time with similar educational qualifications are not usually promoted quicker than the expected age to particular ranks but some may be promoted later than the rest of the group. Gradually differentiation arises within the contingent, particularly when only a few reach buchō level before retirement.

From the outside the rather drab, grey apartments appear to be poorly kept, the concrete stairs crumbling in several places and the unpaved driveway outside some 'A' buildings turning into muddy pools when it rains. The upkeep of the buildings is in the hands of the company, who tend to spend money on maintenance rather sporadically, according to the level of profits - or so it is believed by many of the shataku

residents themselves. Apart from the allotments behind some of the buildings (where mainly vegetables and only a few flowers are grown), the only touches of colour come from the laundry hanging from the balconies - or quilts (futon) hung out to air - and children's tricycles or bicycles left in the openings to the stairwells. Gardening sheds are provided for those tending allotments but there are no garages, cars being left out in the open on the driveways or small parking areas with no formal allocation of spaces. The style of the buildings is identical to the shataku described by Rohlen (1974: 225-228) in that each block consists of three entrance ways and stairs from which four apartments lead off on either side[13]. Those sharing the same stairwell tend to have more frequent contact with each other than with other residents and friendships tend to develop particularly between neighbours facing one another on the same landing. However, the Nissei shataku is far larger than the two blocks which formed Rohlen's shataku apartments and social relationships in Ueno appear to be rather more diffuse among blocks of the same type: for example, those in 'B' blocks are separated by several blocks of 'A' apartments[14] but housewives in the 'B' blocks have most of their friends among other 'B' block residents than among those in 'A' blocks. This is largely a result of similarities of age and contacts between mothers with children attending the same school rather than any maintenance of strict status distinctions. Those now living in 'B' blocks often used to live in 'A' blocks but moved through promotion in the firm; at first those who have moved to 'B' blocks keep up friendships

---

(13) In Rohlen's case the apartments in 'A' blocks are larger than those in 'B' blocks, the reverse of the lettering given to the Nissei shataku.

(14) In the main area of apartments, two pairs of 'B' blocks are separated from each other by four blocks of 'A' apartments, but four other 'B' blocks do form a semi-separate social group among themselves on the other side of the reservoir.

with their former neighbours in 'A' blocks but as these too are promoted to 'B' residences contacts with 'A' block residents become more attenuated. Essentially the different types of accommodation reflect stages in the life cycle, but the next stage for most residents is to buy their own house rather than remain in company housing.

The size of the shataku accommodation largely determines the kind of furnishings and life-style. There are some individual variations on account of preferences for more traditional or more modern arrangements but on the whole those in smaller accommodation use less fixed furniture than those in larger accommodation. It is far more practical for those in 'A'-type flats or blue-collar houses to use futon (mattresses and quilts) which can be folded up and stored away in a cupboard during the daytime, thereby providing more living space. Those in larger accommodation are more likely to have beds, sometimes using bunk beds for the children, but their greater space is also mitigated by their generally larger family size with two or three children often of school age[15] so that some families still prefer to use futon. There is also more flexibility to have overnight visitors (relatives or friends) if futon are used instead of beds.

Kachō houses more usually have soft chairs and settees rather than traditional style seating arrangements involving sitting or kneeling on low cushions (zabuton) on the floor around a low table in a tatami

---

(15) The eldest child in 'A' flats is usually aged from 4 to 7 or 8 with most families having only one or two children. The eldest child in 'B' flats is usually between 9 and 13 and more families have 3 children. The eldest child of kachōs is more usually a teenager and those of buchōs may be at university. There are of course many exceptions to these generalisations based on the mean age of children and considerable overlap between the categories through differences in age of marriage and speed of promotion, etc.

room. The latter arrangement is preferred in most apartments because the table and cushions can be easily moved to make space for other activities, but some families with only one child sometimes have a sofa or chairs. Carpets or rugs are the norm for 'Western' style rooms but are not uncommon either in flats using traditional furniture[16]. Heating may be by electric radiator, gas fire or electric kotatsu in winter, the latter consisting of a low table covered with a quilt and a working surface on top; an electric light is attached to the lower surface of the table which warms the legs of those sitting around it. This is the preferred form of heating in many flats using traditional style furniture (especially if they have young children for whom some other forms of heating might be dangerous), but may be used in conjunction with kerasene stoves which heat up the room generally. In the summer many families use air conditioners and might remove the paper-covered wooden screens (fusuma) which divide the living rooms in order to allow more draught to pass through the rooms. Nevertheless the front doors are usually still kept shut.

Most homes, irrespective of rank in the company, are well stocked with electrical equipment such as a radio, television, electric rice cooker, stereo, refridgerator, washing machine and telephone; in the higher ranking accommodation (from 'B' flats upwards) video sets and air conditioners may be added to this list, though the latter are not uncommon in some of the 'A' flats. Other space is often taken up by bookshelves, desks for the chidren's studies (if of school age), toys, cabinets, sometimes a piano (normally for a child to learn on) and occasionally large dolls in glass cases or various souvenirs and knick knacks. Almost all families have a motor vehicle of some kind, which is normally

(16) Since Nissei make some types of carpets, employees can buy these at a discount at the factory shop.

available for the wives' use during the day because their husbands can walk to work in just 5 to 10 minutes.

The men in the shataku leave for work a little after 8.00 am in order to arrive in time for the physical exercises at 8.20 am, the instructions for which are broadcast throughout the factory loudspeaker system. Work begins at 8.30 am and is nominally until 5.30 pm but it is not uncommon for some to do overtime until 7.00 pm or later. Generally their social networks are centred on their work teams so that their relationships with other men in the shataku tend to be on the basis of work ties except for close neighbours who may get to know each other through their wives' contacts or by walking to work together at the same time most mornings. At the weekends many play or watch baseball on the pitch just across the road from the apartments, sometimes playing with their children there. The baseball pitch provides an informal meeting place for the spectators as well as a social arena for the players. Other sports clubs in the factory provide opportunities for friendships to develop. The company provides a swimming pool, tennis courts, judo, Japanese fencing (kendō) and Japanese archery (kyūdō) facilities and the respective clubs include instructors who teach these sports to the children of employees. Those less sport-orientated may get together to play 'mah-jong' but such groups are often formed on the basis of work teams or networks of former school or university acquaintances. A few religious groups such as the Sōka Gakkai[17] form the basis for social networks among a minority.

Some informants may have given on their questionnaires a statutory figure of 40 hours worked each week and not included overtime,

---

(17) A militant Buddhist group, the largest of the 'new religions', claiming to have a membership of over 16 million (Agency for Cultural Affairs 1972:208).

but, even allowing for this, the reported work hours for all types of workers average out at a mean of 47.6 hours per week. There is a slight variation according to status: blue-collar workers and foremen average just over 46 hours per week, kakarichō average almost 49 hours and kachō about 50 hours[18], indicating a slight increase in work load in proportion to status in the company, but some individuals report 60 hours per week and one man 80 hours.

Incomes vary in proportion to status in the company and to some extent with age and length of service, and can be affected by the number of overtime hours, especially for blue-collar workers. Approximate take-home pay per month after deduction at source, of tax social insurance and emergency fund savings[19] are as follows:

Table 2.3 Incomes of Nissei employees

Blue collar workers:	170,000 yen net
Foremen	180,000 yen net
Kakarichō	200,000 yen net
Kachō	300,000 yen net
Buchō	500,000 yen net[20]

(18) The exact means are: blue collar workers 46.3 hours, foremen 46.4 hours, kakarichō 48.9 hours and kachō 50.3 hours. Four of the five buchō in the sample reported their hours of work, and these average at 48 hours, but the modal figure is 50 (i.e. 3 reported 50 hours and one man 42 hours).

(19) This is a fund to help out employees or members of their families who have an accident or illness; the money is deducted by the company at source along with tax and insurance for all employees. Gross monthly salaries for foremen are about 250,000 yen and for kakarichō 300,000 yen.

(20) About 10% more is added to these figures as a cost-of-living allowance for employees in Tokyo and Osaka.

In addition, each employee receives a bonus every 6 months equivalent to 2 to 3 months' salary: for kakarichō, for example, this comes to about 600,000 yen net (800,000 yen gross) per half year[21]. Since many families usually live off their monthly salaries and do not view the bonus as income for normal uses, this money is often saved or used for major expenses such as buying a piano (for a child's lessons) or a new stereo.

A further source of 'hidden income' comes from the fact of living in the shataku itself. Rents for different sizes of shataku accommodation are as follows:

Table 2.4 Rents for shataku accommodation

Blue-collar wooden houses		(total plot = 52 sq. metres)	= 6,100 yen per month
'A' type apartments		(" " = 52 " ")	= 9,100 " " "
'B' type apartments		(" " = 66 " ")	= 12,100 " " "
Kachō apartments & houses:			
	(a)	(" " = 85 " ")	= 15,600 " " "
	(b)	(" " = 100 " "	= 16,100 " " "
Buchō houses:	(a)	(" " = 150 " ")	= 24,000 " " "
	(b)	(" " = 200 " ")	= 26,100 " " "

All rents include the provision of water supplies[22]. These rents represent a considerable saving when compared with current market rates for

(21) Conversion of these amounts into Sterling is problematic owing to fluctuating exchange rates, but the rate at the time of writing (1984) is approximately 320 yen to the pound.

(22) This in itself would be equivalent to between 1,000 and 2,000 yen per month for many families, if not more. Gas and electricity bills are paid by each family separately: for apartment dwellers these would together average about 10,000 yen per month, of which 3,000 or so would be spent on electricity and 6,000 to 7,000 yen on gas, though the amounts vary according to the different seasons of the year.

flats elsewhere in Ueno: about 45,000 yen for an apartment similar in size to the 'A' flats, and over 50,000 yen for the equivalent of a 'B' flat. There are, in addition, many other welfare facilities provided by Nissei for its employees. These include a clinic with a staff of six doctors and nurses exclusively for Nissei employees and their families. Originally this small 'hospital' was set up when Nishiyama was still a rural suburb of Ueno, but the need for such a private medical facility has diminished with the establishment of large city and prefectural owned hospitals in Ueno within 15 minutes' drive by car. Nevertheless, the facility remains and is popular among shataku residents and Nissei employees in other parts of Ueno not only because the fees charged are lower than other local hospitals or general practitioners but also because the Nissei clinic is open in the afternoons after other doctors have finished their surgery hours. Other subsidised facilities for Nissei employees include meals at the factory canteens and hair cuts with the Nissei barber, plus the provision of many sports and leisure facilities within the factory compound such as a swimming pool, tennis courts, sports stadium, squash courts and facilities for the martial arts; the company allows time off work for the 20 members of the boat club to practice for the annual boat race held on Lake Biwa (in Shiga prefecture). The total contribution to an average shataku family's income made by the 'hidden income' from all these Nissei facilities is estimated by the man in charge of the provision of such welfare facilities to be equivalent to another 100,000 yen per month on top of the average take-home pay of 200,000 yen for many middle-level employees.[23]

---

(23) The brief description given by Abegglen (1973: 101-103) of fringe benefits available in a textile factory employing 3,500 workers, the location of which is unspecified, parallels those available at Nissei to a considerable extent, differing in only a few details.

Although many shataku housewives reported their hours of work on the questionnaire, all of these called themselves housewives rather than employees of a firm, with the exception of one lady who is an advisor for a publishing company but only works in that capacity for two hours per week. Several other women have part-time work giving high school students extra coaching in some subjects for which they earn about 20,000 yen per month (5,000 yen per hour spread over a group of 5 pupils), or else teach specialist crafts such as knitting to other women, but all of these are sidelines for 'pocket money' rather than principal sources of income. Since their Sakurano address automatically indicates that their husbands work for Nissei, there is some covert social pressure against the women taking outside employment in so far as such work would imply that the company was not paying their husbands enough so the wives 'have to' go out to work, an implication which would damage the reputation of the firm locally. Such attitudes are found also in many shataku situations elsewhere in Japan (Kinoshita 1983). However, for the majority of shataku wives the question of employment is not an issue at stake anyway, because they are young mothers with pre-school or primary school age children whose primary concern is the bringing up of their offspring rather than finding employment. For them, 'pocket-money' work for a few hours each month, or voluntary work done in their free time at home (in the case of one lady who transcribes books into Braille), is the most outside work for which they consider themselves to have time to spare.

Nevertheless, these mothers do have considerable amounts of free time which they spend on hobbies such as tennis, knitting, reading, attending concerts, or simply chatting with their neighbours. As noted by Rohlen (1974: 230), shataku families in the same block

have no formal status distinctions in terms of size of housing etc.[24] and children often are roughly the same ages in adjacent flats so run in and out of each others' homes relatively freely. Their parents are rather more inhibited but do go into one another's homes frequently, on some occasions several from the same stairwell congregating together. Such meetings are arranged in advance, however, and are prompted by an occasion such as a child's birthday party or the Boys' or Girls' Festival days, when the conversation tends to be mainly centred around the children.

Aoyama-chō

Separated by a bridge over the motorway from Sakurano, Aoyama-chō presents a contrast with the shataku in several respects, most of them linked directly or indirectly to house ownership.

In appearance, Aoyama-chō is less homogenous than Sakurano. Whereas the Sakurano houses are each of an identical style according to their clearly demarcated blocks for various statuses in the company hierarchy, the Aoyama houses are more individualistic, with large next to small in adjacent plots. Although all built by the same company originally, residents had a wide choice of styles and sizes of houses to choose from, and since then many have added on extensions or in a few cases a whole upper storey[25]. There is therefore much less uniformity of house design, and the plans of houses given in Figs. 6 to 8 are

(24) The husbands are of the same rank in the firm and the adults are almost all in a similar age range, born at most within 10 years of one another.

(25) At least two houses were newly constructed between 1982 and 1983 on the site of a previous house and several others extended, in one case with a second storey built. These were no longer bound by the original contract stipulating the houses had to be built by the company which initially developed the area (and which had become bankrupt in 1975).

Fig. 6. A bungalow in Aoyama.

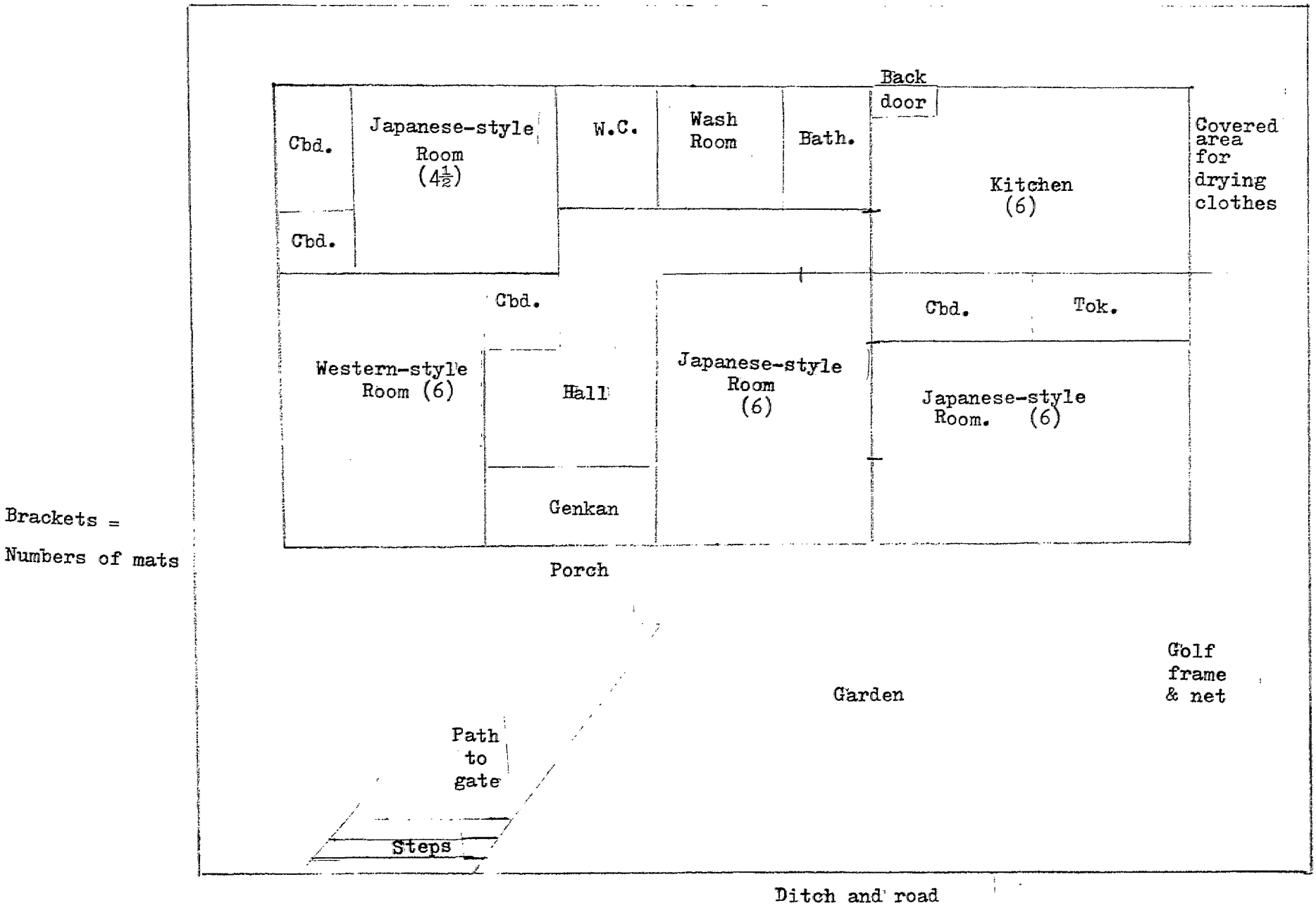

Fig. 7a. A medium-size house in Aoyama before extension.

Ground floor.

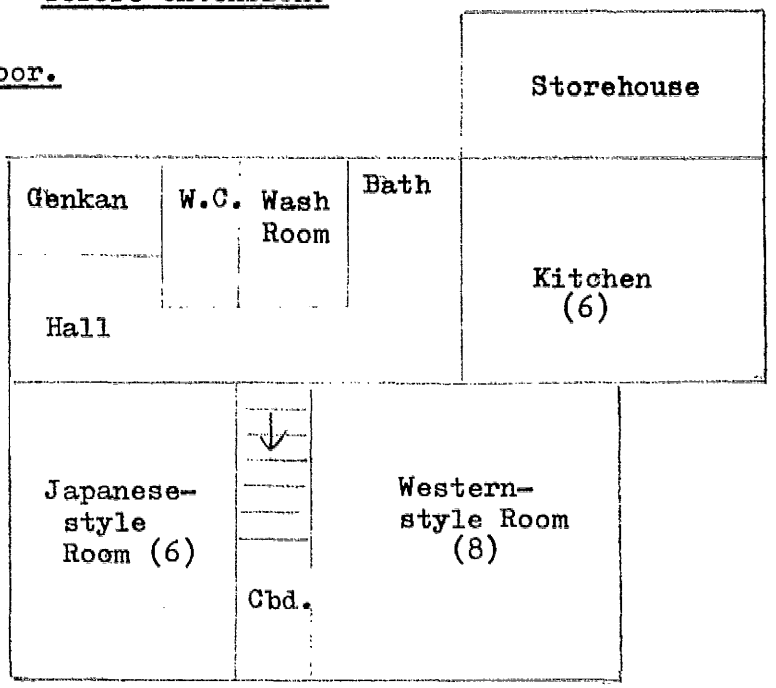

First floor

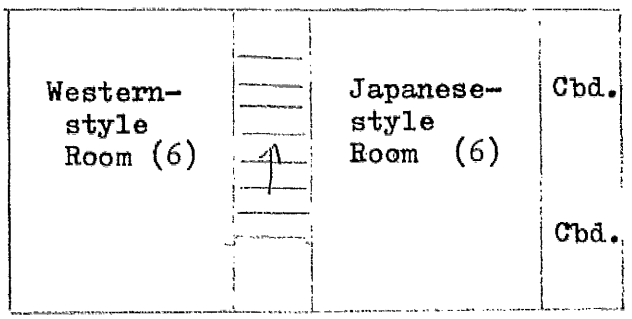

Fig 7b. The same house after extension.

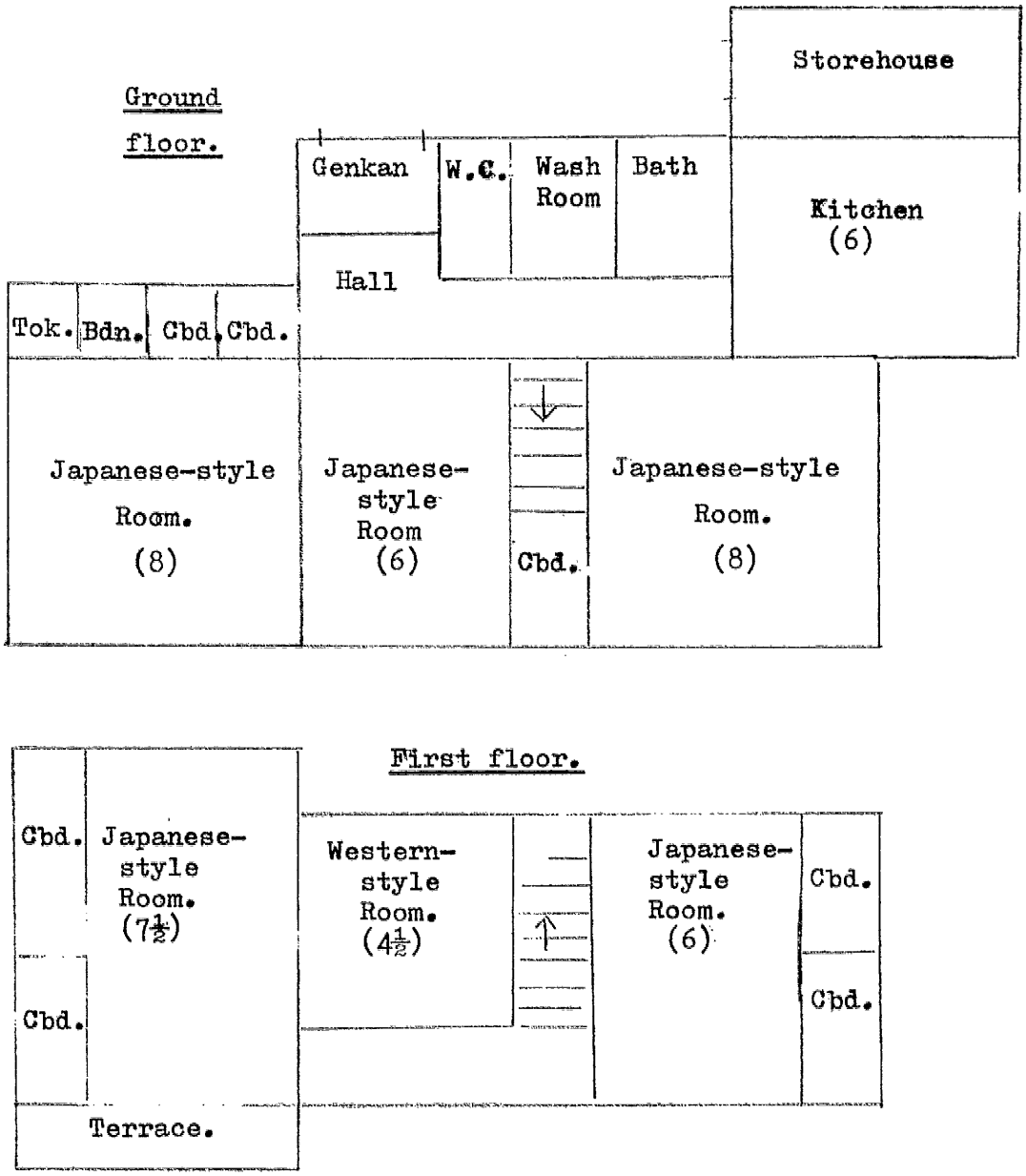

Fig. 8. A larger house in Aoyama.

Ground floor.

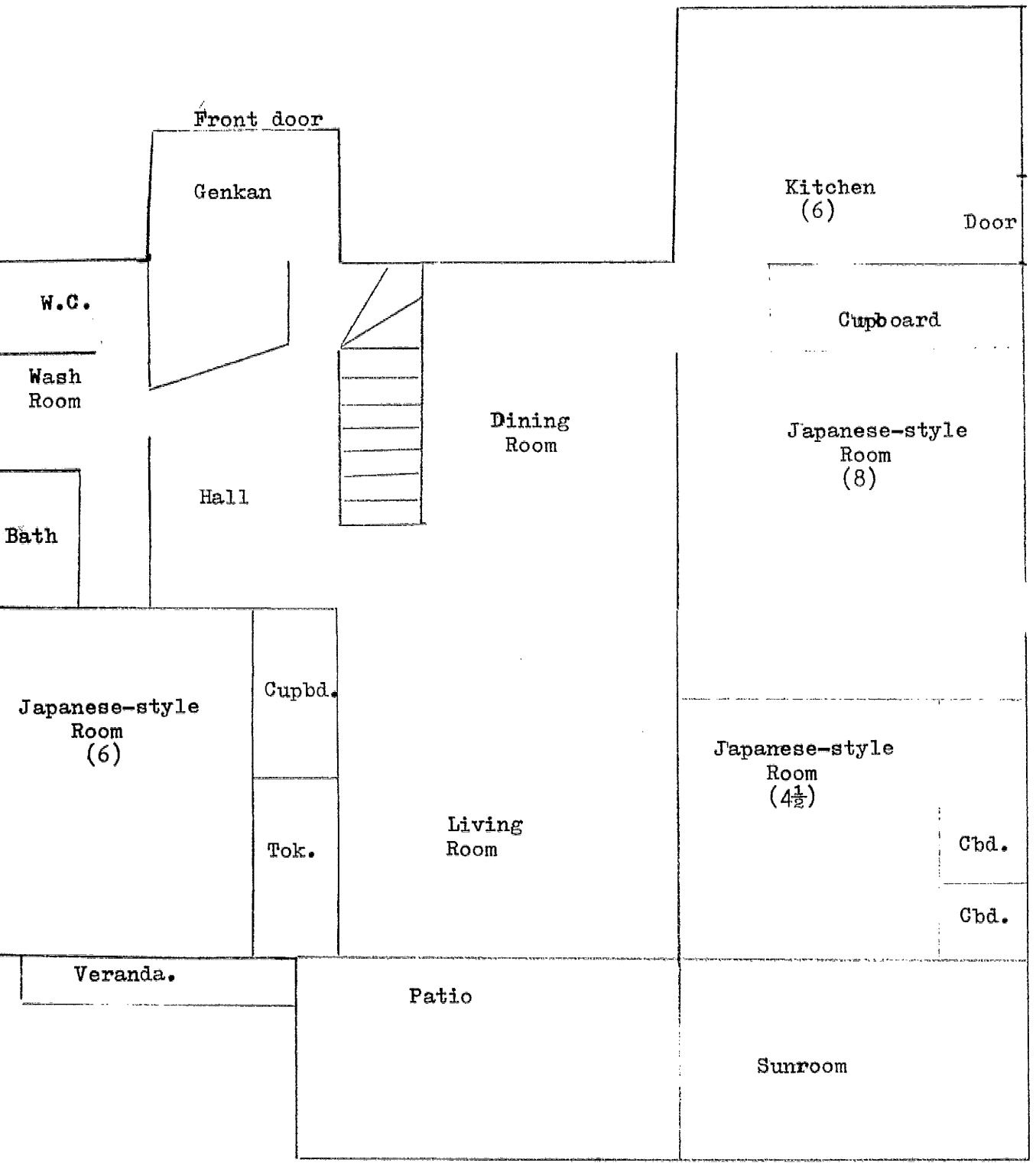

Fig. 8 (continued)

First floor.

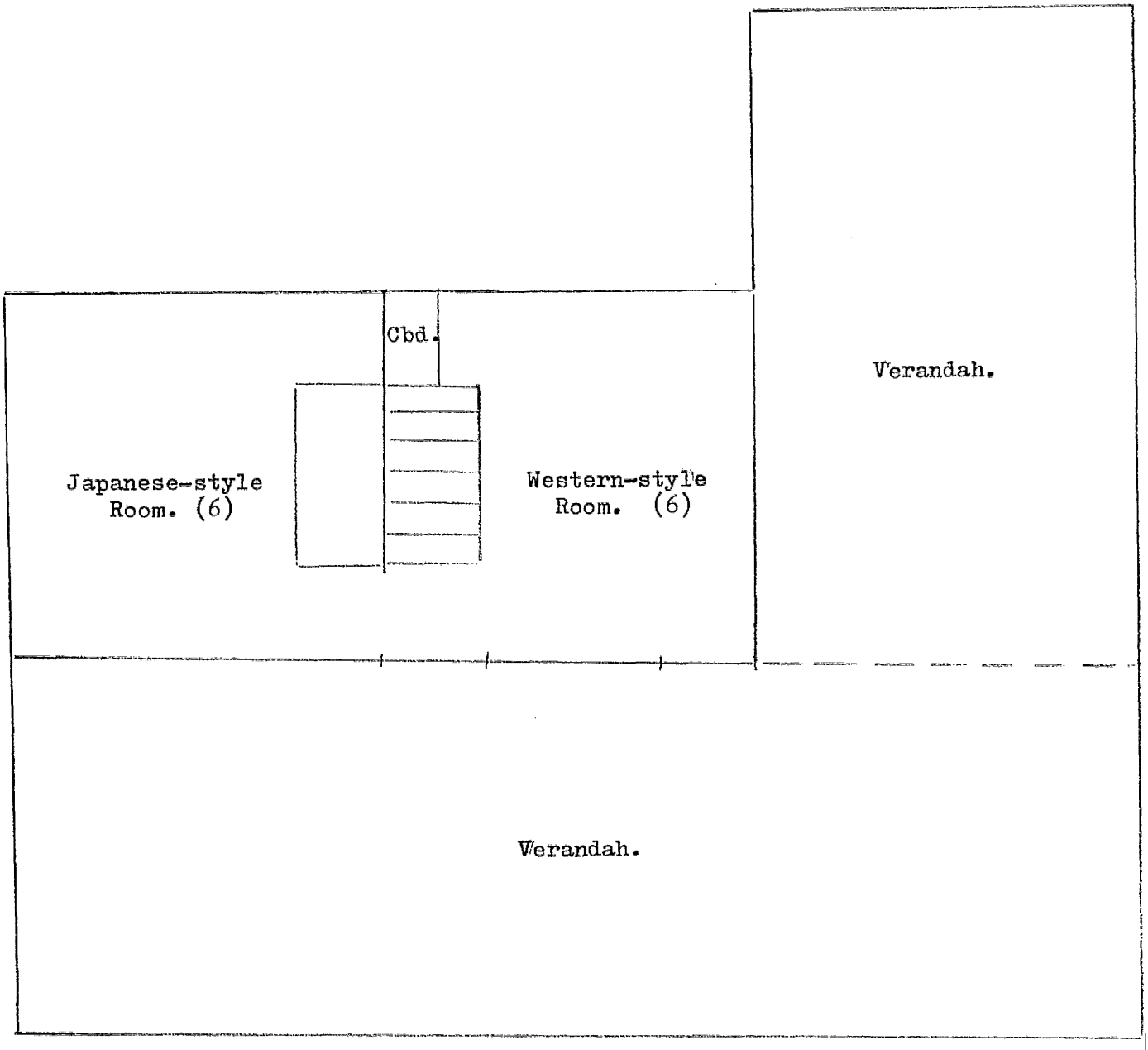

representative only of small, medium and large houses in Aoyama and not of standardised blocks as in Sakurano[26].

As a recently built housing estate, Aoyama-chō presents an atmosphere of modernity and affluence. The houses are well maintained and give an appearance of freshness by the white paint of those erected or extended in the past two to three years. Many homes have well kept gardens, though often hidden behind tall perimeter hedges or high walls. Most gardens are no bigger than the front garden of a small English semi-detached house, and often smaller. That depicted in Fig. 6, for example, measures 36 ft. by 12 ft. but has one of the larger gardens, largely because the house is smaller than average. The owner keeps a golf net at one end of the lawn (which never grows very high because of the thin soil) so chose this design partly for the sake of his hobby[27]; however, most other householders prefer house space rather than garden space in their limited plots measuring from 36 ft. square (1,296 square feet) to 36 ft. by 65 ft. (2,340 sq. feet) for longer plots, so that most gardens are little more than 9 ft. square or, including the path to the gate, 9 ft. by 12 ft.

The actual living space in the smaller houses such as that in Fig. 6 is in fact no larger than that of one of the slightly larger 'B' apartments in Sakurano, and is smaller than the kachō and buchō shataku

---

(26) Nevertheless there are several examples of each of the types illustrated among Aoyama houses.

(27) Later, in 1983, he added a second storey to the house rather than extending outwards, which tends to confirm the value he placed on having a golf practice area. They have no children so did not need a larger house at first but later extended upwards for the sake of convenience in terms of guest rooms and a bedroom which did not require the putting away of futons (quilts and mattresses) each day.

The main street of Aoyama-chō,
showing refuse piled up ready for collection.

Children playing during the Aoyama
summer festival.

houses. Though containing a garden, instead of the separate allotments of shataku households, the smaller Aoyama houses do not necessarily have any significant increase in living space.[28] Larger houses do have considerably more living space, however. Those depicted in Figs. 7b and 8 have living areas of 720 and 810 square feet respectively, which considerably exceed some of the kachō houses of Sakurano in terms of space, the larger Aoyama houses being approximately as large or larger than the Nissei buchō houses.

Inside the homes there is a similar gradation in terms of style of furnishings as that between the Sakurano apartments and kachō or buchō houses: the smaller Aoyama homes tend to be largely furnished in traditional Japanese style with tatami matting, kotatsu, and the use of futons at night, whereas larger homes more commonly have sofas, soft living room chairs, and beds. Nevertheless one room, often that closest to the front door, is normally kept as a Japanese-style room where guests may be entertained. Styles of heating and furnishings are not dissimilar from those used in similar sized accommodation in Sakurano, except that Aoyama residents tend to be rather more wealthy and to have more items such as air conditioners, video sets, personal computers and amateur radio transmitting and receiving equipment.

A wide variety of occupations are represented by the residents of Aoyama. Most of them are white-collar, upper middle-class, professional people but several might be classified as lower middle class,

---

(28) Partly this is because of limits on the amount of loan available from the Housing Finance Corporation. When many houses were built the maximum loan for this type of house was limited to homes containing a floor area (upstairs and down) of no more than 1,260 square feet, which has subsequently been raised to 1,440 sq. feet. However, the cost of land is also much higher now, 300,000 yen per unit of 36 sq. ft. of Aoyama land in 1983 as compared with 100,000 yen per 36 sq. ft. in 1970. Over half of the cost of the house is taken up by the price of the land.

though such classifications are problematic. Among the lower middle class residents are probably to be included the local grocer and dry cleaner, a car repair man, the manager/owner of a garage, two electricians, a merchant seaman, a potter, a professional bicycle racer and possibly three carpenters. Some of these could be regarded as well paid blue-collar types of work, and classification of these into 'lower middle class' tends to be more by education (up to high school level) than by income, since some of these people have higher average incomes[29] than 'upper middle class' business men. Those with university education might be classified as 'upper middle class', but again this does not always correlate consistently with income levels, so that university educated primary and high school teachers receive considerably less income than some high school educated self-employed people. Several people are intermediate between these two broad groupings, since they have received specialist training in a particular craft or skill since leaving school, such as three musicians with the Kyoto Philharmonic Orchestra, a fireman, two policemen, a military man (in the Self-Defence Force), a professional golf instructor ('pro-golf kachō'), a builder and a male nurse. Other professions represented in the Aoyama sample among university educated white-collar people include 7 civil servants, 4 school teachers, 4 university lecturers, 3 architects, 2 doctors and a dentist. Three others own individual family businesses which employ less than 15 other people[30] and one man owns a larger firm with about 40 employees.

---

(29) The term 'average income' is used to include the professional bicycle racer, who travels around Japan to compete in races, about 3 each month, and lives off whatever prize money he receives.

(30) One of these employs about 12 people but on its books it officially employs 24 because each of the firm's employees finds a relative who will officially register as another employee on the firm's books. All are officially part-timers whose income is below the taxable minimum so that no tax needs to be paid. In practice only half the 'work force' are actually employed and work a normal shift for which they receive the theoretical part-time wages of two people.

The majority of Aoyama residents are businessmen in larger companies, however. The Japanese term 'salary man' (sarariiman) is normally used for these white-collar employees of prestigious companies who make up a large proportion of what Vogel (1963) calls Japan's 'new middle class', and who constitute 76.4% of the 178 Aoyama men who specified their employment or type of work on the questionnaire. Most of these simply wrote 'company employee' (kaishain) and did not specify which firm, but 33 of the 136 'salarymen' could be identified as Nissei, present or former, employees[31]. Because these constitute a well-defined group in the housing estate and their wives tend to associate together more with each other than with others, the wives of men who work for other firms or who are self-employed tend to see this group as a potential threat to stable relationships in the area if the Nissei wives were to form a pressure group similar to that exerted in the local primary school by the Sakurano wives who meet on the tennis courts. They might be exaggerating the extent of Nissei influence when they say that ¼ to ½ of the Aoyama men work for Nissei and that Aoyama is becoming a 'Nissei village' ('Nissei mura'), but it is true that those moving into Aoyama in recent years have been predominantly Nissei employees. At least six of the Nissei families now in Aoyama used to live in shataku nearby in Sakurano and moved out once they had saved up enough to buy a home, or at least to obtain a mortgage in order to purchase one. Many prefer to still live in the same general vicinity as before because of its proximity to their work place or former friends, so Aoyama presents an attractive proposition. Now that all the plots in

---

(31) Two of these are now retired from Nissei and work elsewhere, one having set up his own photographer's shop and the other working for a kimono company in Kyoto.

Aoyama have been bought they can only wait until an Aoyama resident moves out for one reason or another (such as the husband being transferred to another part of Japan, or inheriting a house from a deceased parent), so there are a number of Nissei employees now living further away who had formerly looked for accommodation in Aoyama.

Of the 178 Aoyama respondents providing details of their employment, 136 are 'company employees', 13 are self-employed and 29 others are the equivalent of 'salarymen' working for large institutions such as universities, hospitals, the Self-Defence Forces, or the local civil service. Therefore the self-employed constitute only 7.3% of the Aoyama population, and Nissei employees account for at least 20% of the remainder. There is virtually no difference in average work hours between Nissei salarymen, non-Nissei employees and those working for other large institutions: all average about 50 to 51 hours pwer week[32], though there is still considerable variation among individuals (mostly between 45 and 55 hours weekly). The self-employed average noticeably more hours of work per week, however, most of them working over 60 hours and some like the grocer working as many as 84, including time spent on deliveries. The mean working hours for the 13 self-employed men come to 59 hours weekly, but one of these is a potter who only works 23 hours to maximise his available time for proselytising for the Jehovah's Witnesses. Average working hours for the other twelve come to 62 hours a week.

Incomes in Aoyama begin at around the kachō level of Nissei, because it is only then that most families are able to afford the step

---

(32) Mean work hours for the Nissei employees is 50.18 hours per week, for non-Nissei employees 50.84 hours and for those in other large institutions 51.13 hours.

of buying a house, owing to their levels of savings and of income for paying off a mortgage on the remaining amount needed. Those men in their thirties or forties at the kachō level of a company earn about 6 to 8 million yen per year gross, the amount varying somewhat according to different firms and personal factors relating to the man's education, experience and type of work. Older men in their later forties or early fifties often earn about 10 million yen per year gross, roughly equivalent to the Nissei buchō level of incomes. These figures include the bonus element, which amounts to about one third of the total. After deduction of national and local taxes, amounting to about 1½ million yen for those earning 10 million yen gross, and about the same amount for health and other insurance premiums plus superannuation, the net income for such men comes to over 6 million yen. Probably the wealthiest man in Aoyama is the owner of his own company and earns about 18 million yen a year gross, whereas the one with the most unpredictable income is the professional bicycle racer who each month participates in 2 or 3 races around the country and usually manages to obtain prize money of 200,000 to 300,000 yen, up to a million yen if he wins first prize in a famous race, so on a good year he can earn more than those of buchō level, though a considerable amount of money needs to be saved owing to his uncertain future. Several of the older wives, whose children are in school, may take employment as a means of occupying their time with the proceeds being used mainly for luxuries but also as savings for the children's higher education or marriage, whereas some younger wives feel they need to work in order to help with the household finances, especially if they have quite a heavy mortgage.

Sakurano and Aoyama: Contrasts in lifestyles

Four men in Aoyama who reported their hours of work did not specify their type of employment - though they are probably 'salarymen';

including their figures in the following table along with the 178 whose type of work is known, it can be seen that in aggregate Aoyama men tend to work rather longer hours than Sakurano men:

Table 2.5 Hours of work for men in Sakurano and Aoyama

	Sakurano	Aoyama
Up to 40 hours per week	62 = 29.8%	42 = 23.1%
41-45 hours per week	37 = 17.8%	22 = 12.1%
46-50 hours per week	67 = 32.2%	51 = 28.0%
51-60 hours per week	38 = 18.3%	41 = 22.5%
61-90 hours per week	4 = 1.9%	26 = 14.3%
Totals:	208	182

However, the commuting times involved mean that Aoyama men are away from their families for considerably longer hours than their Sakurano counterparts. Many of the non-Nissei Aoyama men work in Kyoto or Osaka, several of them having a total of 3 hours travel time for a return journey each day, as compared to maxima of 20 to 30 minutes for most Sakurano men, as shown in Table 2.6:

Table 2.6 Commuting times for Sakurano and Aoyama men

	Sakurano	Aoyama
Up to 1 hour per week	71 = 34.5%	10 = 5.8%
1 - 2 hours per week	78 = 37.9%	20 = 11.6%
2 - 5 hours per week	44 = 21.3%	36 = 20.8%
5-10 hours per week	5 = 2.4%	51 = 29.5%
11-20 hours per week	7 = 3.4%	49 = 28.3%
Over 20 hours per week	1 = 0.5%	7 = 4.0%
Totals:	206	173

Those Aoyama men with one hour or less commuting time, and most of those with 1-2 hours, are mainly Nissei employees, while the local grocer and dry cleaner have no commuting time at all as their homes are adjacent to their workplace on the same site. It is the non-Nissei

salarymen who tend to have the longest commuting times in Aoyama, although one Nissei employee in Aoyama is in fact employed now at their plant near Osaka rather than at the Nishiyama plant. The same situation applies to a few of those in the Sakurano shataku who have been transferred to factories elsewhere but for various reasons prefer to keep their homes in Sakurano. At least two of these, one a buchō and the other a kachō, have been transferred respectively to the Tokyo office and to a plant outside Tokyo but, because their children are at a critical point in their schooling, preparing for university entrance examinations, and transference to another school would be difficult or would jeopardise their chances of success, the fathers live separately from their families for most of the week and return only at weekends, or sometimes even less often. This tanshin-funin system works the other way too, in that over half of the 234 occupants of the Nissei dormitories for single men are in fact older executives whose families are elsewhere in Japan. This Nishiyama factory has 3 such dormitories: one with accommodation for 24 men is composed completely of tanshin-funin executives, in another 50 out of 60 are on tanshin-funin in the third about 50 out of 150 are on tanshin-funin schemes, the rest being younger unmarried men.(33) Each younger man has a 6-mat room to himself, but more senior executives often have the partitions removed to create a double sized room for themselves. Just one example of such an executive on tanshin-funin is Mr. Ōkura, the General Affairs departmental manager at Nissei, whose son in Kamakura has tried for two successive years to get into one of the Tokyo universities and in order to maximise his chances the family have remained in Kamakura. Mr. Ōkura has lived in the dormitory for over two

---

(33) This produces the effect that some of the most senior and most junior members of the firm are often living in the same dormitory.

years, and his commitments at Nishiyama meant that he was unable to return home at all during the 3 months from the beginning of October 1983 to the New Year holiday.

Among the reasons for this tanshin-funin system are the promotion and job transference systems of the firm. In order to give men the promotions they have come to expect at certain ages, it may be necessary to move them to distant factories, but even without promotions needs may arise for skilled men in particular plants who are transferred there at short notice. Twice a month, on the working days nearest to the first or 15th/16th, announcements of transfers are made which give the transferees two weeks' notice to prepare for the move[34]. Since this is often insufficient time for their wives and children to move, there is often a period of tanshin-funin involved before the families rejoin their husband or father.

Although some Aoyama men are also affected by tanshin-funin policies in their firms, and may have to move house because of it, about one quarter of the residents are most unlikely to be affected by such policies because they are either self-employed or work for institutions without branches in other parts of Japan, such as local hospitals, universities, schools or city or prefectural governmental organisations. This in itself provides a relatively stable core, to which may be added the employees of medium or small firms which operate only in the city or region. Although figures for these are not available, an estimate

---

(34) This is twice the time given to announcers for the N.H.K., the Japanese equivalent of the B.B.C., who have only one week's warning of a move to another part of the country. According to one such announcer, he spends that week drinking with his friends in the evening while his wife packs up the house.

based on known company membership puts the number of such men as at least another quarter of the Aoyama population. They might even comprise the bulk of non-Nissei employees, in so far as Nissei is the largest single firm in this area and those working for other major firms with plants or branches throughout Japan are more likely to live in their firms' shataku or in closer proximity to their places of work than to live in Aoyama. Such considerations suggest that Aoyama is on the whole a more 'stable' or settled community than Sakurano.

This stability is reflected in the very fact that they have bought a house in the area, indicating an expectancy of living there for at least the foreseeable future. The fact that many of them have long-term mortgages on their property (often for 25 years) is a further disincentive to move. In 1983 land prices in Aoyama were 300,000 yen per tsubo (35.58 square feet), the size of two tatami mats[35], so that the land itself for most plots costs between 10 and 20 million yen (£30,000 to £60,000). Two houses built at this time had total costs for land and construction of 29 and 33 million yen per house, or between £90,000 and £103,000 at current exchange rates. The buyer of one of these had received loans of 13 million yen from the government-instituted Housing Finance Corporation (jūtaku kinyū kōko) and of 20 million from his company (split into 10 million each for the land and house) to be repaid over a 25 year period before his retirement. This involves repayments of 110,000 yen (£343.75) per month just to repay the capital, let alone interest, but others who bought their homes while land prices in this area were relatively cheaper (in the early 1970's)[36] have more

(35) Each mat measures almost 6 ft. by almost 3 ft.

(36) Even by then land prices had risen considerably: between 1955 and 1970 they rose 14-fold, or by a yearly average of 19.2%, according to figures cited by Matsu moto (1982).

modest mortgages: 30,000 to 40,000 yen per month over a 25 year period is regarded as a 'relatively modest' mortgage, but at least one household in Aoyama paid for its house in 7 years by having a short mortgage but monthly repayments of 100,000 yen, the last of which they paid off in 1981.

Sakurano families, by contrast, are often busy saving up for a house and taking advantage of a Nissei scheme which gives marginally higher interest on savings than bank deposits and which provides finance for those employees who wish to buy their own homes. The degree to which families save varies according to whether or not they expect to receive property eventually from parents, many eldest sons inheriting their parents' houses, especially if they have no other brothers(37). The majority do save to some extent, however, some more consistently than others(38). Even those who expect to inherit a house in the future save for retirement and old age, such as one household which saves about 500,000 yen per year for such purposes. A few shataku families already own property elsewhere, such as one man who has inherited his father's house in Kyoto but is living in the shataku until his mother becomes too frail to live by herself. Another man bought a house near Osaka 7 years ago when he was at the Osaka office, but the following year was transferred to Nagoya so lived in shataku there. When he was transferred to Ueno in 1981 he decided to live in the kachō shataku as it was more convenient and the rent he was receiving from the family

---

(37) One man with a married sister regarded his sister as no longer having a claim on the inheritance because she had married into another family; in other cases sisters receive some share in the inheritances though sometimes less than their brothers.

(38) For example, one family said they had only about 2 million yen in savings because they used their savings every so often for household equipment or to buy a new car.

using his house covered at a slight profit both the 30,000 yen per month repayments of a loan he had received from the company and the 16,100 yen per month rent for his present house.

The two areas therefore represent two stages in the life cycles of many Japanese families. Before marriage the men might live in a company dormitory, but many women and some men remain living with their parents up until marriage, commuting from there to work (the commuting time sometimes being 3 hours or more per day). After marriage, many young couples live in company housing, especially those working for larger firms like Nissei. Medium-sized firms may also have shataku, but those working for small businesses employing no more than a few dozen people often have no shataku accommodation provided and have to live in rented accommodation owned by either local councils or private enterprises (cf., for example, Cole 1971: 68-69). Some live with the husband's parents (rarely, the wife's parents) after marriage and may either continue to do so indefinitely or else save up to buy a house of their own sometime, like the shataku residents.

Whichever path is initially taken, the aim of most families is to live in their own house sometime, whether they have to wait to inherit one or have to borrow the money for a mortgage. Formerly the eldest son used to inherit the 'lion's share' of parental property, including the house, but since 1946 partible inheritance has been the rule (cf. Fukutake 1967: 52-55; Nakane 1967: 6-7; Dore 1958: 119, 131; 1959: 264-5). Not infrequently those born before or during the Second World War are one of several siblings, in some cases as many as six to ten, but more commonly between three and five, but those born subsequently tend to be one of two or three siblings only. Reasons for this among Ueno residents are normally couched in terms of the population density of modern Japan whereby there is little space in crowded urban accommodation for large

families[39], and often they say they could not afford to have more than 3 children[40], but, whatever the reasons, the result is that eldest sons constitute an increasing proportion of the male population and the family property is divided among only two or three children at most. Therefore, despite the partible inheritance laws, many eldest sons (chōnan) still expect to receive all their parents' property and prefer to live in shataku until they eventually inherit the family house rather than taking out a long-term expensive mortgage.

Those who do not expect to receive much inherited property or who would have to wait a long time before they are likely to receive it, tend to be those who save up to buy their own homes and to take out long-term mortgages. While in shataku they are creditors receiving interest on their savings but once they buy a house they are debtors for many years while repaying the loan. Many are not clear of their debts until retirement age. Though they may be receiving a higher income than when they were in the shataku, they also have more financial outlays from no longer receiving a company subsidy on their housing, having heavy mortgage payments to meet, and also from having older children whose educational and other expenses need to be met. In such circumstances more wives begin to take some kind of employment, and such is the case in Aoyama.

---

(39) The post war rural-urban migrations not only created high urban population densities but also produced the steep rises in land prices.

(40) In fact, many could 'afford' an extra child but are unwilling to accept the drop in their standard of living entailed by another child, so any extra unwanted conceptions may often result in abortions. The only family in the sample with four children only had four because the last two were twins. Since fourth and subsequent children are often aborted, those with larger families often have strong ethical objections to abortion. In Matsubara live a Pentecostal Christian family with five children evenly spaced at two year intervals, and two other evangelical Christian families of the author's acquaintance (one of them the pastor of Ueno Baptist Church) also have four or five children, none of them twins.

Although most housewives in Aoyama, like those in Sakurano, are occupied with child-rearing and have relatively little time for outside employment, a number do teach middle and high school students subjects like Mathematics and English after school, or teach younger children calligraphy or the use of a musical instrument. Many mothers in both Aoyama and Sakurano also spend considerable amounts of time encouraging their own childrens' education, whether by helping them with their school-work, giving them extra coaching on the abacus, or selecting books of suitable educational value from the mobile library when it visits the area once a week. Since there are no pre-kindergarten play groups in the area[41], those with children under 5 years of age have relatively little time for employment, but those with older children sometimes take up some part-time work. There are also several unmarried women in the area living with parents, or in one case with a sister's family, who are employed on a full-time basis.

Those married women who are employed full-time are the wives of self-employed people, such as the grocer's wife who reports a work week of 80 hours, though often during slack periods in the shop she is doing housework round the back or talking with customers. The wives of two men owning their own firms (one a small engineering firm making products such as conveyor belts and the other a business which produces the gold and silver thread used in the sashes of kimonos) help their husbands with office work, book-keeping, sales and other types of administrative work[42]. Both these women have children at school during the day and tend to see their employment more in terms of helping their

---

(41) Such groups are relatively rare in Japan as a whole.

(42) One of these receives a monthly wage of 800,000 yen according to the firm's books but in practice, she says, her husband tends to keep her money with his and to amalgamate them in the family budget.

husbands and having something to do during the day than as a necessary source of income: this is certainly the case for the wife of the man who earns a pre-tax income of 1,500,000 yen per month, plus unearned income from rents (200,000 yen per month), shares and interest on several different bank deposits, and whose name just makes the lower ranks of a book listing all the high income earning people of Japan.

This family, the Kitamuras, employ some of the housewives in Aoyama on a part-time basis to wind thread at home. Another Aoyama woman, whose husband is a designer for a kimono and rug factory in Kyoto, weaves kimono sashes (obi) in her spare time on a loom in her house. The wives of the dentist and of a doctor help their husbands filling in forms for claiming payments from health insurance companies, though the dentist's wife only does this when there is a considerable backlog. Similarly the sister-in-law of a small shopkeeper in Ueno often helps out her husband's brother during busy periods at the shop. Several other wives are employed outside the area, at least four of them working as sales assistants in retail stores or a travel agency. Three other housewives have full-time employment, of which the husband of one is unemployed and the husband of another is a full-time postgraduate student.

Among those women with employment who specified their hours of work two main groups can be distinguished:

1) Older women with children of high school age or older, plus two unmarried women with full-time work and a nurse who lives with her parents, husband and children in a 3 generational family and whose parents look after the children when she is at work. Included in this group are occupations such as cookery lecturer, bank employee, nutritionist, psychiatrist, surgery receptionist and clothes designer,

plus the wives of the grocer, dry cleaner and other self-employed people. The mean work hours for this group of 17 come to 48 hours weekly, though the figures range from 30 hours to 90 hours (the latter by an unmarried pharmacist).

2) Part-time work by younger married women either at home or at local companies. The mean work hours for these 7 women, six of them the wives of company employees and the other the wife of a musician, come to 16½ hours per week, with a range from 8 to 24 hours.

A number of other women do not have regular employment hours but work on a part-time basis on 'put out' work or at times of heavy demand in a husband's or relative's work. Their reported hours of work are problematic, owing to the fact that at least some women included housework under their hours of work[43]. Nevertheless, despite the difficulties of giving detailed statistics on hours of work for women it can be stated with confidence that female employment is considerably higher in Aoyama than in Sakurano, and that to some extent this is linked to life-cycle processes involving patterns of debt and the ages of children.

A final stage in the life cycle of some families is when an elderly parent, often a widow or widower, comes to live with a married child and grandchildren to form a 3-generational household. Such households can also be a product of newly-weds living with the husband's parents if no shataku or other cheap accommodation is available. The latter process is the case in at least 3 households in Aoyama, and the former is probably the case for the other 33 3-generational households in Aoyama

(43) For example, two women who wrote that they do part-time work at home ('put out' work) reported hours of 56 and 42 hours per week. Either they do the work at home on a full-time basis or they have included housework in their assessment of working hours.

and for the only 3-generational household in Sakurano. This gives rise to another major difference between the two areas, as shown by Table 2.7, from which it is clear that 3-generational households are found almost exclusively in Aoyama. The one exception in Sakurano is a family living in one of the newer kachō houses[44].

Table 2.7 Comparison of Aoyama and Nissei shataku

	Aoyama	Nissei shataku
Number of households in usable sample	213	253
Household composition:		
Couple plus husband's father and mother	7 = 3.3%	NIL
Couple plus husband's mother	16 = 7.5%	1 = 0.4%
Couple plus wife's father and mother	1 = 0.5%	NIL
Couple plus wife's mother	8 = 3.75%	NIL
Couple plus wife's father	2 = 0.9%	NIL
Couple plus husband's mother and sister	1 = 0.5%	NIL
Couple plus wife's mother and wife's sister	1 = 0.5%	NIL
Unmarried woman plus mother and sister	1 = 0.5%	NIL
Unmarried man plus elderly mother	1 = 0.5%	NIL
Total of 3-generational households	36 = 16.9%	1 = 0.4%

Among those 3 families in Aoyama where a young married couple are known to have lived with the husband's parents since marriage[45]

(44) Even so, the accommodation is still quite cramped for 3 adults and 2 teenage children, but is mitigated by the fact that the old lady is very gracious and appears to have a better relationship with the family than some other co-residential mothers-in-law. Certainly this is a subjective impression but one which is also reported of this lady by other neighbours in Sakurano. At the risk of appearing biased in the presentation of data, it should nevertheless be noted that this whole family are Protestant Christians, the older lady having been converted by a Brethren group when she was younger.

(45) This may have been the case with some other couples too who were not interviewed, but the exact process cannot be discerned from their questionnaire information.

all 3 live with the husband's parents, seem to favour a more 'traditional' style of house furnishing[46], and all possess a Shinto god-shelf (Kamidana) or an equivalent[47] (cf. chapter 3). The elder generation in two of the three families are of rural background, and in the third, from an old-established Ueno family. Their reasons for living together with the husband's parents are that accommodation is cheaper this way; one man of the older generation also added that it is a good arrangement for promoting family 'communication' and the grandparents are on hand to look after the grandchildren if necessary. In all of the families where both the husband's parents are co-residential, and in at least 10[48] of those where the husband's mother lives with a married couple, the husband is the eldest son of his parents, a pattern which corresponds to traditional norms regarding the eldest son's responsibilities for his parents (cf. chapter 3)[49].

Commensurate with the later stage in the average life-cycle represented by Aoyama is an age distribution of the population which not only includes more people in the grandparental generation but also an older average age of the population in comparison with Sukurano, as indicated by Table 2.8.

---

(46) Partly this is necessitated by the size of the house in proportion to number of residents; the styles of foods favoured are not always traditional foods.

(47) One family has a statue of the kitchen god Kōjin, which they regard as equivalent to a Kamidana, placing a daily offering of salt before it.

(48) In three cases details of the husband's birth order were left blank; in other households he is a younger son.

(49) Most of these are aged 45 or over and may have had more siblings than is common nowadays, so it is not necessarily the case that no other brother is available to care for the parents.

Table 2.8 Differences in age of residents in Aoyama and Sakurano

Age Group	Aoyama	Sakurano
20 - 24	12 = 3.0%	3 = 1.1%
25 - 29	19 = 4.8%	36 = 13.5%
30 - 34	52 = 13.0%	84 = 31.5%
35 - 39	120 = 30.0%	83 = 31.1%
40 - 44	85 = 21.3%	34 = 12.7%
45 - 49	47 = 11.8%	17 = 6.4%
50 - 54	36 = 9.0%	7 = 2.6%
55 - 59	14 = 3.5%	3 = 1.1%
60 and over	15 = 3.8%	0
Totals:	400	267

(Aoyama percentages total 100.2% owing to rounding and truncation errors).

These statistics are based on the ages of questionnaire respondents, but as those in the grandparental generation rarely filled in a form the statistics reflect mainly the ages of the husbands or wives who constitute the 'principal householders' for the purposes of the questionnaire. The ages of some adult children living with their parents in Aoyama have also been included where they filled in questionnaires, accounting for the slightly higher proportion of Aoyama respondents in the under 25 age group, but the overall tendency is for the Sakurano population to be concentrated between the ages of 25 and 39, after which they gradually move out of the shataku into their own homes, whereas the Aoyama population shows a more even distribution of householders except for the higher proportion of those aged 35 to 39 in 1981 who were products of the post-war 'baby boom'.

Areas of Origin

a) Far and Near

As one of the prestigious companies of Japan, Nissei attracts job applicants from all over Japan. Furthermore, the system of promotions and transfers means that people from many different areas of the country may live for a while in the Ueno shataku before being transferred elsewhere or buying a home in the Ueno region. Many Aoyama residents, however, work for smaller firms which recruit on a local or regional basis, so that a much higher concentration of people from the Ueno region itself live there. Those from the same prefecture as Ueno City itself account for 16.8% (67 out of 374 people) in Aoyama, but only 8.2% (22 out of 255 people) in Sakurano. The major regional differences are summarised in Table 2.9:

Table 2.9 Proportions of population samples in Aoyama and Sakurano according to regions of origin

Regions of Origin	Aoyama	Sakurano	Regional populations as proportions of national population (50)
Hokkaidō	0.5%	1.2%	4.9%
Tōhoku	1.6%	5.1%	8.6%
Kantō	6.7%	15.3%	28.2%
Chūbu	9.9%	12.9%	17.3%
Kinki	61.5%	27.1%	18.1%
Chūgoku	9.6%	14.1%	6.7%
Kyūshū	6.7%	19.2%	11.5%
Shikoku	3.5%	5.1%	3.7%
Okinawa	0.0%	0.0%	0.9%
Numbers in sample	374	255	
Number with missing data	26	12	

(50) Proportions are taken from the 1970 population census, as given in the encyclopedia Britannica, 15th edition, vol. 10, p. 45.

Notes on regional names:

Hokkaidō	
Kyūshū	Islands of Japan with lower populations than
Shikoku	Honshu, the main island.
Okinawa	
Tōhoku	Northern and northeastern Honshu.
Kantō	The region around Tokyo and Yokohama.
Chūbu	Central Honshu, from the Nagoya region and Aichi prefecture through Nagano prefecture to Niigata and Ishikawa prefectures.
Kinki	The region around Osaka, Kobe and Kyoto, plus adjacent prefectures such as Shiga, Mie and Wakayama. Ueno City also lies in this region.
Chūgoku	Western Honshu, from Hiroshima and Tottori prefectures westwards to Yamaguchi prefecture, inclusive.

The Kinki region, and areas such as Chūgoku and Kyūshū from which there has been considerable migration to the Kinki, account for a higher than proportionate percentage of both areas when compared to the national percentages: the higher concentration of such people in Aoyama reflects the differences between the nation-wide recruitment net of Nissei employees and the more localised nets of many firms where Aoyama residents are employed. These differences mean that Aoyama tends to be more representative of local, and Sakurano of national, population samples, though these are more differences of degree rather than being in any way fully representative of either situation. Since no local area is ever likely to be representative of the whole nation in terms of proportions by areas of origins, this contrast between Sakurano and Aoyama does provide a certain balancing out between particular local characteristics and nationally distributed trends when considering attitudes to religious phenomena.

b) Rural and Urban

The place of origin (shusshinchi) of each respondent was asked in the questionnaire, in order to ascertain urban versus rural differences. However, in practice these turned out to be difficult to determine from the addresses alone, on account of (1) insufficient local detail by many informants who only wrote their prefecture or city (shi) of origin, and (2) the ambiguity of many Japanese adminstrative terms which include both urban and rural areas. This is particularly the case with the words shi ('city') and -chō or machi ('town'), urban areas which often include many surrounding villages or rural areas. For example, the village studied by Hendry in Kyūshū is administratively one of 77 sections of Yame City (shi), and several of the surrounding rural areas are classified as machi (Hendry 1981: 42, and note 7 pp. 73-4)[51]. The prefecture containing Ueno City (shi) contains administratively 7 'cities' (shi), 42 'towns' (chō) and only 1 'village' (mura), but large areas of it would be classified as rural by English standards, including several villages beyond Nishiyama near the river which lie administratively in Ueno shi ('city'). Therefore it is often impossible to classify a particular area as 'urban' or 'rural' from the address alone. Consultation of local maps may provide some indication of whether a particular sub-division of an administrative region is more 'urban' or 'rural', but even the more 'rural' areas are often subject to extensive building and urban overflow as the de facto 'urban' area expands. However, details at the level of subdivisions within these areas such as 'shi' or 'machi' were not always supplied by informants, so for only a relatively few clearly rural people (from areas classified as mura or gun, another term for a rural district)

(51) Hendry's footnote gives a useful summary of some of the problems of translation involved in these administrative terms, for which the usual English equivalents apply more accurately to the system which was in existence in 1868 than to the modern administrative units.

could rural/urban origins be ascertained from the questionnaire.

However, it usually became clear in the course of most interviews whether the individual was from a predominantly rural or urban area, and this information will be used where relevant in the following chapters. Table 2.10 shows the proportions of urban and rural respondents in each area by sex:

Table 2.10 Urban/Rural origins of interviewees

	Aoyama		Sakurano		Row
	Males	Females	Males	Females	Totals
Urban	18	24	20	12	74
Rural	4	10	8	4	26
Totals	22	34	28	16	100

Note: Those from small country towns are also included in the 'rural' figures.

In fact, rural/urban differences were not noticeable for many of the religious practices and attitudes which will be discussed in the following chapters, but even if the attitudes are very similar and the types of practices (such as grave visits, possession of charms etc.) virtually identical, there did appear to be a slight qualitative difference to the extent that the few individuals who seemed to the anthropologist to be 'more religious' tended to be from rural areas. This is a very subjective assessment because there is no clearly objective way of weighting the many elements involved, each individual representing a slightly different mix of practices such as possession of safety charms, worship of ancestors, worship of Shinto deities, concern with 'calamitous years', consultation of fortune-tellers, and so on. Moreover, the degree to which some of these are practised varies with stages in the life-cycle. One basic difference which does tend to correlate with urban/rural distinctions,

however, is the difference between 'active' and 'passive' belief: for most items, those from rural areas tend to maintain more of an 'active' belief in the existence and power of ancestral spirits, the possibility of communicating with them through mediums, and the importance of daily worship at household altars. Of the five individuals who seem to be particularly 'religious' in these terms, three are women and two are men, all live in Aoyama, and all except one (a man) are from rural backgrounds[52]. The one man from an urban background is from Kyoto, which is widely regarded as a very 'traditional' city and as relatively 'religious' in terms of its high concentration of Shinto shrines and Buddhist temples (a total of over 3,000 in the city), some of which are the head temples of Buddhist sects or are very famous Shinto shrines. This man considers himself 'more religious' than his neighbours in Aoyama, and at least one of the 'very religious' rural women was described in such words by one of her neighbours: it therefore appears as if the anthropologist's subjective impression of these individuals does correspond to the opinions of people in Aoyama too.

These impressions would tend to indicate that some secularisation has taken place between rural and urban areas, but such statements can only be made with extreme caution, taking into account the following factors:

i) This is largely a subjective assessment of certain individuals, but there are relatively few objective studies of rural areas which provide quantitative and qualitative assessments of the degree to which people in rural areas 'believe' ('actively' or 'passively') or practise the features used as criteria listed above. Where there are

---

(52) Yoshioka-san, the Nissei catering manager who is described in chapter 13, would also be included in the category of 'very religious' men, but he is not counted as one of the 100 interviewees. He is also from an urban background and lives in a home just a few miles from the fieldwork area, in another suburb of Ueno City.

relevant studies on some of these features, it appears that (a) daily worship at Buddhist household altars might be more common in urban than in rural areas (cf. Smith 1974: 107-111, which will be discussed further in chapter 3), (b) the incidence of what I call 'active' belief may be relatively low also in rural areas (Ooms 1967: 295-305), and (c) there is considerable variation among rural villages themselves, so that in one there may be a widespread fear of evil spirits and vindictive gods but in another such concerns are relatively peripheral (see Namihira 1974: 234-249, comparing 'Tani no ki buraku' in Shikoku with 'Katsu-moto ura' village in Kyūshū).

ii) As far as the author is aware, there are no quantitative or qualitative studies on the degree to which rural inhabitants 'believe' or practise other forms of religious activities such as fortune-telling, possession of safety charms or direction-lore (geomancy), and only very few studies deal with practices related to 'calamitous years' (yakudoshis).

iii) Comparisons between urban and rural areas may fail to take into account a 'substitution effect'[53] whereby 'religiosity' may be manifested in different forms in urban areas. This is particularly relevant to the emergence of many 'new religions', largely in urban areas (Ikado 1968: 103-109; Agency for Cultural Affairs 1972: 91-2; McFarland 1967: 4-6), the adherents of which do appear to be

(53) I have in mind the 'income and substitution effect' noted by economists, according to which tastes may change as income rises: therefore, instead of buying more margarine, a household with an increased income might begin to substitute butter for margarine. This model may apply to rural/urban, educational and class differences, each of which may represent the equivalent of a rise in income which might produce a change in tastes and a 'substitution effect'.

'very religious', especially Sōka Gakkai members who chant before their Buddhist household altars for an hour or more each day in some cases known from Sakurano and Aoyama (cf. also Basabe 1968: 32). Christianity also tends to be more concentrated in urban areas, and comparisons between a 'devout Christian' and a 'devout Buddhist' may be problematic to some extent.

iv) Although the five individuals who seemed to the researcher to be 'very religious' were mainly from rural areas, many others who are very close to coming into this category are from urban areas. These are people (mostly women) who bow occasionally or regularly to images of the Bodhissatva Jizō when they visit relatives or take their children to school each day, who sometimes pray to the moon, mountains or other natural phenomena, and may consult priests or mediums about certain crises (such as those involving marriage or illness). They were not counted among the 'very religious' because of their not having a household altar at which they pray daily, but their attitudes are such that they pray at such altars when visiting relatives, or conduct similar rites when visiting grave areas, and it is likely that they would pray regularly at a household altar if they were to become responsible for one. It should also be noted that 3 of the 5 'very religious' people had experienced a serious medical problem which had led them to consult mediums or priests, whereas those without such precipitating factors might be potentially but not actually among the minority considered to be 'very religious'.

For these reasons any assessment of rural to urban secularisation is extremely hazardous and lacks firm quantitative or qualitative comparative data in many cases. Since the concept of 'secularisation' tends

to imply that the sphere of 'religion' has declined on account of social factors such as urbanisation, industrialisation, or 'scientific' thinking[54], and because the lack of reliable data in Japan makes it impossible to say to what extent 'religion' has really 'declined', as compared to its taking alternative forms in urban areas, the term 'non-religious' is preferred to 'secular' in the following chapters.

Marriage patterns

One feature which does clearly correspond to the urban/rural distinction, however, is the incidence of marriage among kin, which is found only among a minority of those from rural backgrounds. This correlation is largely a product of the long history of residence in an area common to many farming households, and patterns of social interaction by which young people who marry in such areas are often those from such long-established households. In fact, all the cases of such kin marriage found among those Aoyama and Sakurano residents who were interviewed involve re-marriage between households with an existing affinal link rather than 'endogamy' as such, although this distinction becomes partly a matter of perspective and of knowledge concerning marriages in earlier generations[55]. Four cases of kin-marriage were found, but for one of

---

(54) 'Scientific' is here put in inverted commas, firstly because many religious concepts are not amenable to scientific analysis (Southwold 1979: 633-4), so it is a crude, popular 'scientism' which thinks that 'science' has 'disposed' religion and secondly because in Japan at least some former folk beliefs have been alleged to be 'scientific' when the proposed 'scientific' explanation appears to be more 'pseudo-scientific' rationalisations than documented scientific interpretations, as will be discussed further in chapters 4 and 14.

(55) Looking backwards in time from the perspective of a child of one of these re-marriages between households, his or her parents' marriage would appear to resemble endogamy because of the existence of earlier geneological ties, whereas the parents' perspective is that of two people with an affinal link. However, if there had been consanguineal or cognatic links between them in earlier generations which are no longer remembered an 'endogamous' marriage may no longer be viewed as endogamous, or the link be so distant that it is considered insignificant.

these families the exact details were not known: "I know we are related somehow, but it is very distant and very old and I don't know exactly how we are related." The other 3 kin-marriages are as follows:

1) The Ozaki family in Sakurano

The Ozakis are from neighbouring villages about 5 kilometres apart outside Matsuyama in Ehime prefecture (Shikoku). Mrs. Ozaki is her husband's MMZSD[56], as the following genealogy shows:

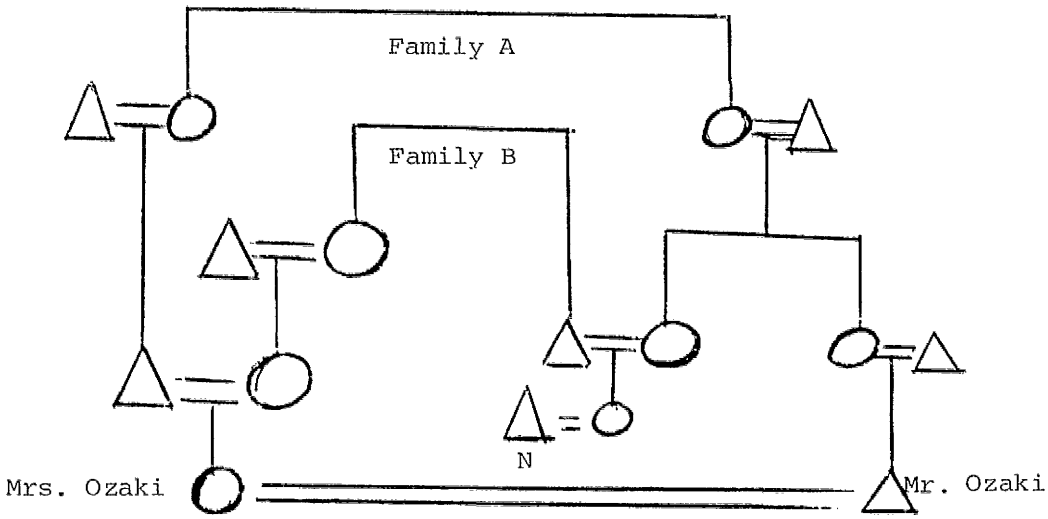

The Ozakis were married by miai ('arranged marriage'), their go-between (nakōdo-san) being N., whose wife is Mr. Ozaki's MZD and Mrs. Ozaki's MMBD. There had already been two previous marriages between these families A and B, the two households perhaps having had a long history of intermarriage, but before their miai Mr. and Mrs. Ozaki had not known each other previously except for a brief meeting at A's funeral[57]. Later they were introduced to each other at N's house, and they married about one year later[58], early in 1981, when Mr. Ozaki was aged 27 and his wife 24.

---

(56) Mother's mother's sister's son's daughter.

(57) The nakōdo-san joked with them that because they married after meeting at a funeral it was a kind of 'jinx'.

(58) Usually the time between meeting and marriage for a miai is about 6 months, but in this case was longer because Mr. Ozaki was working for Nissei and was not able to return to Shikoku so frequently.

2) The Minami family in Aoyama

Mr. and Mrs. Minami are aged 50 and 46 respectively, and were married in 1958. They are both from a rural part of Yamaguchi prefecture, and theirs was also a miai marriage. Their nakōdo-san was Mrs. Minami's mother's younger brother's wife and Mr. Minami's father's brother's daughter, as shown in their genealogy:

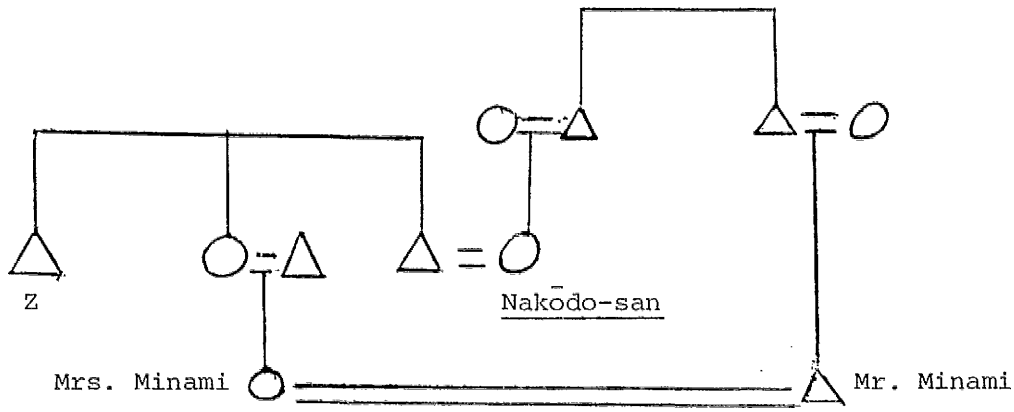

They were introduced to one another at the house of Z, Mrs. Minami's mother's elder brother, rather than at the home of the nakōdo-san herself, but the time from meeting until marriage took the normal pattern of 6 months.

3) The Yoshida family in Aoyama

This couple are from a village which is now a suburb of Akashi, a town to the west of Kobe, but was a rural area when the Yoshidas were married there in 1952[59]. Their wedding was conducted in a relative's house and had no formal religious links, a pattern found also among one other older couple in Aoyama[60], but the Yoshidas chose for their wedding day the date traditionally regarded as the last day of winter

(59) Mr. Yoshida was aged 25 and Mrs. Yoshida 22 at the time.

(60) Such marriages were not uncommon at one time in rural areas (cf. Hendry 1981: 171, 183-5) and account for at least two of the households who had a 'non-religious' wedding.

and the transition to spring[61]. Mrs. Yoshida's elder sister had already married the younger brother of Mrs. Yoshida's mother, and Mrs. Yoshida had no brothers to continue the family name or look after the ancestral cult when her parents died, so her marriage to Mr. Yoshida in effect merged her lineage into that of the family into which her elder sister had already married, as shown by their genealogy:

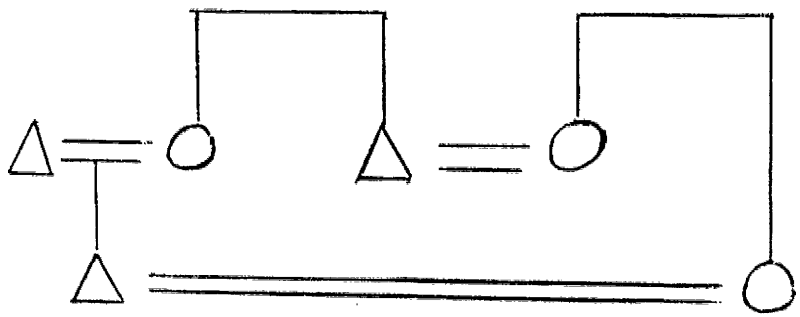

Mr. Yoshida Mrs. Yoshida

The Yoshidas' marriage was not a miai type because they had known one another from childhood. Although in both the Yoshida and Minami genealogies one partner is structurally of a higher generation than the other, the ages of these spouses are quite close to each other owing to the effects of birth order, the intervals between childrens' births, and the ages at which different siblings married.

Out of these three cases, it is noteworthy that the dates of marriage were 1952 (Yoshidas), 1958 (Minamis) and 1981 (Ozakis). It may be that the Ozakis are exceptional, but their case does indicate that marriages among kin have persisted until recently in that part of Shikoku. This is in contrast to the cessation of close-relative marriages in some villages elsewhere, such as that studied by Hendry (1981: 124-5), where

(61) This is Setsubun, the rites connected with which will be described in chapter 5. There reference will again be made to Mrs. Yoshida as someone who takes Setsubun a little more seriously than most others.

such marriages ceased from 1952 onwards. There is of course a problem of defining the limits of 'close-relative marriages' in terms of genealogical distance, but where such marriages do occur in rural areas they appear to be a product partly of physical distance and communications between people of marriageable age, partly of the opportunities for contact outside of miai arrangements and partly of the choice of nakōdo-san and his or her range of contacts.

The term 'miai' ('arranged marriage') may be contrasted to the term 'ren'ai' ('love marriage'), in which the couple meet through mutual activities at a place of work or leisure. Hendry (1981: 116 ff.) notes that the connotations of these words are subject to personal interpretation and re-interpretation, but that most people are 'quite definite about whether or not their marriage was a ren'ai' (ibid., p. 116). A number of those interviewed in Ueno were uncertain whether to call their marriage miai or not, because they had been introduced by a mutual friend without having a formal miai arrangement. Two of these called their marriages 'a sort of miai' but they normally preferred to call theirs a marriage by "introduction" (shōkai). Using their own self-classification into these three types, the following changes over time can be perceived for the 80 marriages on which data was systematically collected[62].

(62) Four of those interviewed were unmarried, and exact details on marriage types were not collected for some of those included in the 30 open-ended interviews which were less systematic in breadth but more comprehensive in depth than the initial 70 interviews.

Table 2.11 Marriage patterns over time

Year of Marriage	Miai	Shōkai	Ren'ai
1947-1951	1	0	0
1952-1956	0	1	3
1957-1961	3	1	0
1962-1966	5	0	5
1967-1971	12	4	10
1972-1976	3	5	12
1977-1981	4	4	6
Totals:	28	15	36

The rapid increase in numbers from 1967 to 1971 is a product of the post-war 'baby boom', which to some extent also is included in the 1972 to 1976 figures (especially for ren'ai). Allowing for the increase in marriages in these years, the figures do indicate a decrease in the relative proportions of miai marriages in more recent years and an increase in the proportions of ren'ai and shōkai marriages. To some extent this trend is a product of greater social contacts between the sexes in recent years (Sofue 1983: 19-20), especially in urban areas, and the increasing preference for a shōkai kind of introduction, which may have the potential to develop into a ren'ai type of marriage, and is less formal and perhaps more relaxed than the traditional type of miai introduction in the presence of a nakōdo-san and parents or chaperone at a hotel, restaurant or other relatively formal location.

Correlations between forms of marriage and urban/rural differences are problematic because sometimes the husband is from a rural and the wife from an urban area, or vice-versa, and in many cases the urban/rural origins of a spouse who was not interviewed were not ascertained. Where the information is known for both spouses, and particularly for those couples where both are from a rural or urban area, no clear patterns of marriage types can be observed in the available data. Those from

rural areas may have met by miai or have grown up together, and those in urban areas have also met by a variety of methods. Among urban residents, there are at least some who had gone out with a boy or girl friend whom they did not marry but later married someone else by miai or shōkai as they began to reach or pass the tekireiki, the expected age of marriage, and family pressures to marry increased. A number had turned down several or many proposals or miai arrangements before eventually marrying, one 30-year old woman still remaining unmarried at the time of interview despite her parents' many attempts to find her a partner by miai[63]. At least one woman who had married by ren'ai because (she said) her parents and family were pushing her into marriage and her boyfriend at the time was also putting pressure on her to marry him, seems to regret now that she had not married a former boyfriend with whom she occasionally has long-distance 'phone conversations unknown to either her husband or his wife.

Most marriages (80.1% of the sample) are by Shinto rites, the reason given for this by most informants being along the lines of "that's the usual way", or "the hotel arranged the ceremony and we just did what they suggested". A few had Buddhist rites (5.3%), these being mainly Sōka Gakkai adherents and, in at least one case, families from relatively exceptional villages where Buddhist rites are preferred. Christian and 'non-religious' ceremonies became particularly popular

---

(63) She resented the fact that they seemed more interested in her providing grandchildren to continue the family line, as she is an only daughter, than in her happiness in marriage. She claims that her parents tell her she should 'gaman suru' - be patient - or 'ganbaru'-do her best, stick it out - even if she does not get on well with the husband they find for her, and to be a devoted wife for the sake of her household (ie). Her parents' preference is for her to marry a man who will adopt their surname and continue their family name and ancestral rites as an adopted son-in-law (yōshi).

among those who married in the decade following the end of the war and during the American occupation, partly perhaps because of a certain disillusionment with Shinto-related policies from the pre-war and wartime period (cf. Tsurumi 1970: 186-189; Stoetzel 1955: 157-160), and partly, it seems, because Christian rites became more fashionable[64]. In all, 4.4% of the sample had been married in a Christian church, but most of these did not call themselves Christians. Some of the younger generations who had been married by Christian rites chose that form because it is cheaper than a Shinto wedding and regarded by some girls as "more romantic". A minority of 10.2% had been married by 'non-religious' rites, of which two cases among those interviewed were both people from rural areas aged 45 or over whose wedding had been a household or family affair[65]. One other case was that of the Matsumotos, to be discussed in a later section.

Marriage Relationships

Owing to the difference between the superficial outer appearance of Japanese social relationships, what the Japanese call tatemae, and the

(64) Most of those who married shortly after the war were in their fifties at the time of the questionnaire distribution in 1981: The incidence of Christian marriages rises to 7.1% among those aged 50-54 and to 13.3% among those aged 55-59, but there were none at all among those aged 60 or over. The incidence of non-religious weddings went up too: 14.3% of those in their early fifties had such a wedding, but 40% of those in their later fifties. The percentage is 28.6% for the over 60's, probably all household weddings.

(65) Though not in the sample from the two areas, there is an interesting case of one of the Aoyama residents' relatives who lives in a village near Nishiyama and included in Ueno City, and who for many years has lived with his first cousin (FZD) as if husband and wife though not legally married. The villagers regard this as an incestuous union and see the fact that the couples' first child died in infancy and their second child is mentally subnormal as supernatural punishment on the couple. I was introduced to the man because his relative in Aoyama thought I would be interested to hear about this man's religious cult in which he has visions of the dragon god, claiming the dragon god protects him and keeps it from raining when he goes out. He also organises monthly services for adherents of this dragon god in the area, and prays to the god at his Buddhist household altar for over 2 hours daily.

inner true state of affairs (honne) within a person, household or other group, it is often very difficult to evaluate relationships within a marriage. The superficial appearance is often a lie concealing an inner truth which few will willingly reveal. Therefore the following comments are of necessity based on fragmentary glimpses into a few households' honne, based partly on personal observation but more often on the accounts of those involved, largely, in this case, women informants. Male informants do sometimes speak of the same things, but their attitude is largely "it can't be helped" ('shikata ga nai' or 'shō ga nai') because they have their business commitments but their wives have the children to keep them company.

The last sentence hints at one of the commonest double-edged problems of middle-class wives: loneliness and alienation from their husbands. This is particularly the case for Aoyama wives whose husbands often have longer commuting times to and from work, but Sakurano wives whose husbands are away on an overseas posting or on a tanshin-funin scheme feel the same. Some Aoyama husbands leave about 7.00 a.m. for work and do not return until 9.00 p.m. or 10.00 p.m. on many nights, sometimes not until after midnight if the auditors are checking the firm's accounts or there are important customers to entertain. At least one wife married to such a kachō makes the effort to stay up for her husband at night "because if I didn't I'd never see him during the week", and makes up for her sleep by a nap after lunch. (Many men nap while travelling on public transport). This man's firm has Saturday as a 'half day' officially, but this means that Mr. Kimura may manage to return home by 6.00 p.m. instead of 9.00 p.m. On Sundays he sometimes sleeps on later than usual but often he plays baseball either in the morning or the afternoon and spends most of the rest of the day watching television. His wife sometimes nags him for watching it in a slumped

position, because her father watches with his back straight and she considers it "slovenly" to watch it slumped, so whenever she enters the room Mr. Kimura sits up straight in his chair[66].

Mr. Kimura was born in 1943 and his wife in 1949 so she considers that he belongs to the "pre-war" generation and she to the "post-war", viewing it as a significant generation gap between them in attitudes and behaviour. She considers the "pre-war" generation to be more formal, conservative, narrow-minded and intolerant than the less formal, liberal, broad-minded and tolerant younger generation when it comes to social relationships in the area. The "pre-war" generation keep visitors formally in the entrance-way (genkan) and tend not to invite them into the home, she says, whereas the "post-war" generation is more open in such social relationships. This is a situational matter, however, and partly depends on who the visitor is, but the limits of tolerance are sometimes reached when her husband is repeatedly out late at night and she considers he has insufficient time with the children. Then she will nag him more, the two may have a row and Mr. Kimura will try for a week or two to come home earlier, until he slips into his former patterns again and after a while the cycle repeats itself. His good resolutions lasted a little longer once after his 8-year old son shocked him by the comment that he feels sometimes as if his is a single-parent family, but even after that it was not too long before Mr. Kimura felt his pressures of work were so great that he had to remain there longer at night.

Other 'salarymen', particularly those who work for Nissei, have less commuting but still sometimes do not return home until 8.30 p.m.

---

(66) These details of their backgrounds and attitudes are consistant with Mrs. Kimura's stress on education described in chapter 13, and and also the fact that her family thought she had married "beneath herself" when she married Mr. Kimura because she had come from a 'more educated' family wanting to preserve its social image.

or 9.00 p.m. Some, such as Mr. Kurimoto, a Nissei kachō aged 45 living in Aoyama, make time to spend with their families at the weekends. Mr. and Mrs. Kurimoto often play tennis together on Saturday mornings on the company's courts, while some Sakurano fathers play with their children on the open field area next to the baseball pitch by the apartments, or go out together as families for a drive into the country at weekends. One Aoyama family, the Taniguchis, go up into the hills together and sometimes collect wild flowers and plants; Mr. Taniguchi also enjoys gardening and sketching, one of his favourite scenes being the rice valley below his garden. He and his wife appear unusually close to one another as compared with the relationship between many other couples in their forties with teenage children, whose marriages often seem to be virtually 'marriages of convenience'[67].

In fact, a number of individuals do admit that their marriages are nothing more than marriages of convenience, and say that it is more convenient for them to stay together at the moment than to divorce, though one couple are planning to divorce as soon as their 16-year old son leaves home in a few years' time. Marital unfaithfulness by one or the other spouse is known or suspected in at least four cases (3 involving the husband, one the wife), but the attitude of other wives to a husband's suspected infidelity is often that "You just have to stick it out (ganbaru), because you have to expect that kind of thing once or twice in one's married life". Divorce is rather too shameful a consequence for most couples to consider, and many wives would have very little

(67) It may or may not be relevant to note that the Taniguchis' marriage was arranged through church connections, though neither go to any church nowadays. Though Mr. Taniguchi hesitates to call himself a Christian, he acknowledges the influence Christianity has had upon his life through his parents. While the above comments are based on some subjective assessment, there is likely to be some relationship between family lifestyles and religious influences.

economic support for them and their children if they were to divorce, so they prefer to turn a blind eye to such conduct unless it becomes too obvious.

Those wives of self-employed men who work with their husbands in the same business have an apparently closer relationship with their husbands but even then at least one admits that her marriage is largely one of convenience because it gives her a very comfortable existence economically. She says she and her husband have "not much of a sex life" (though some of the busier salarymen make love with their wives no more than once a week at most), and, like a number of other couples in their later thirties or older, they sleep in separate beds.

Approximately three-quarters of the wives of salarymen, and a lesser proportion of the wives of the self-employed, handle the family finances. They pay the bills, put saved money on term deposits at the bank, deal with mortgage repayments, and give their husbands an allowance for his personal use. In Mrs. Kurimoto's case, this allowance is seen as virtually the equivalent of the childrens' pocket money: when asked about the latter, she replied, "I give my eldest daughter 1,000 yen per month[68], my second daughter 500 yen . . . and my husband 20,000 yen per month", the latter comment in the same breath and unsolicited. She says this is less than 10% of his 300,000 yen per month salary because "he doesn't smoke or go out drinking on his way home (yorimichi) so he doesn't need any more".

From these few observations, necessarily limited, it appears as if many younger couples, particularly those without children or with young children in the shataku, often go out together at the weekends and share in social activities together, the father often playing with the

(68) Pocket money, like most other finances, is on a monthly basis.

children and taking an active interest in his domestic life. As the children become older and go to school, their school activities and education begin to take priority for both the children and their mothers. All children at the local primary school are encouraged to join at least one after-school club, and they are often involved with some kinds of school activities at the weekends too. At this time many shataku parents are actively planning to buy their own homes and are house-hunting, saving up and making inquiries about mortgages, all activities which give them a common goal of some kind. Within a few years after they have settled into a house in an area like Aoyama, however, the husband's work commitments begin to take greater priority over domestic concerns as he rises in the firm to kachō position or higher. His increasing time away from the family can lead to (often unresolved) strains in the domestic relationship which may simmer and occasionally boil over during the course of several years. At this time the marriage is often felt to be virtually "dead" and some wives may seek some kind of part-time work to provide an outside interest in their lives as well as to help with family finances. If the husband is transferred at a time when one of the children is preparing for important entrance examinations to high school or university, the wife may stay behind with the children at home while the husband has a tanshin-funin existence. At this time some wives also worry about their husbands' lack of hobbies, wondering what they would do on retirement because now some say their husbands begin to become a "nuisance" around the house if they have more than a few days off work. Since there are almost no retired people in Aoyama except those in 3-generational households, the question of what they do after retirement is not easily answered, but a few examples can be given from the 3-generational households.

Relationships within 3-generational households

Interviews were conducted with members of 7 of the 3-generational households, six of these being within their homes and one at the anthropologist's home by request of the informant "because it is too crowded at our place and the baby might be disturbed". During the second period of fieldwork contacts were maintained with three of these households, and a greater understanding of internal domestic relationships was obtained.

In three of these households the husband's mother lives with her son and his family. The husband's mother lives in a separate but closely neighbouring home on the same plot of land in Aoyama in the case of one family, and to a large extent leads a separate existence in her own dwelling while continuing to have easy access to her son and his family. In the other two cases the husband's mother lives in the same house as her son and his family. The son in one of these is a 27-year old post-graduate student with a 30-year old wife and a 1½ year old son born within the first year of their marriage. During the day the wife works to support the family while the husband's mother looks after the child. The married couple have the upstairs rooms while the husband's mother has a semi-separate flat of her own downstairs. Both these families live in Aoyama, but the only Sakurano 3-generational family was also selected for interview because it is such an unusual situation for the shataku. The husband's mother in this Matsumoto family is regarded in the neighbourhood as a very gracious lady who is easier to live with than most mothers-in-law, and such is our own impression too. As a young woman she had become converted to Christianity by a Brethren group, and because of this refused to marry a man who was not a Christian. The Christian man she did eventually marry, however, died during the war when their son, Akira, was 2 years old, so she had to bring up the child by herself and found work as a school teacher. She says this was not an

easy period of her life because the villagers attributed her husband's death to her Christianity and ostracised her for a while. Akira was not a Christian by the time he married but as he did not like Shinto or Buddhist rites he chose to have a non-religious ceremony. Later both he and his wife did become Christians, largely through his mother's influence, and were baptised in a Brethren church but later began to attend a Protestant church of another denomination in Ueno.

Three of the other four 3-generational households about which family histories were obtained are households in which the eldest son and his wife have lived since marriage in the same house as his parents. The fourth is a household in which the younger married couple at first lived separately but then after a period of residence abroad came back to Ueno to live with the husband's parents.

Among these 7 families, only two seem to be characterised by a noticeably friendly and harmonious relationship between mother-in-law and daughter-in-law. These are the Matsumotos, already discussed, and the Ikedas, a lower middle-class family (in educational but not financial terms) from a village outside Ueno. They are less formal than most families and invite visitors in through the back door into the kitchen rather than through the front door into a special guest room. Mr. Ikeda junior is a professional bicycle racer who competes in about 3 races a month in various parts of Japan, living off the prize money, while his father is a semi-retired carpenter and handyman. The older couple and daughter-in-law tend to speak mainly in the local dialect but the younger Mr. Ikeda is more used to speaking in standard Japanese because of his frequent travels to other parts of the country. It seems as if his wife appreciates the company of his parents when he is away on trips, and she also seems to be influenced to some degree by her mother-in-law, whose opinions she appears to respect without regarding the older

woman as interfering too much in her life.

Mrs. Ikeda's attitude is not shared by some of the upper middle-class, slightly better educated urban-reared wives who live with their mothers-in-law in Aoyama. The relationship between these co-residential women is often one of covert friction or resentment which may at times explode into overt hostility. Often there is jealousy over their mutual claims to the time and attentions of the family's breadwinner or of the grandchild/grandchildren. These rivalries may extend also to the use of material resources in the home such as the telephone or kitchen. For example, in one home the elder generation lives upstairs and the younger down, with the telephone in the hallway and the kitchen shared between both families. However, the mother-in-law forbids the daughter-in-law from answering the telephone because (in the mother-in-law's opinion) the latter "has a rough, local accent to her voice and cannot speak politely", so the mother-in-law does not want her own friends to hear the daughter-in-law's voice. The younger woman's husband was ignorant of this state of affairs until 1983, when one weekend the telephone rang and his wife told their young daughter to answer it. When the husband a little angrily asked why his wife would not answer it, she explained that for the previous ten years she had been forbidden from answering the telephone by his mother, to which the husband could give no answer and remained quiet in order not to interfere in the women's affairs.

This is the daughter-in-law's version of events and it was not possible to ascertain other versions of the situation, but it is not dissimilar from that reported by another daughter-in-law whose mother-in-law forbids her from telephoning her mother in Mie prefecture more than twice in a year; any other calls have to be made from the public telephone box near the grocer's shop. This lady is confined to the house most of

the day in order that the house is occupied and therefore safe[69] while the mother-in-law is out socialising. She feels she has no independence because she needs to ask her mother-in-law's permission to leave the house, and she is so restricted to the home that she has only a very fragmentary knowledge of local geography[70]. Her desire is to move out to a home of her own and she often expresses this wish to her husband, who is torn between the demands of his parents and those of his wife.

Other complaints made by daughters-in-law about co-residential mothers-in-law tend to follow similar patterns. One wife said she discovered that her mother-in-law, who sleeps in an adjacent room, empties out the fitted cupboard where the bedding is kept and virtually sleeps in the cupboard in order to listen to what her son and daughter-in-law are saying to each other at night. Others complain of the mothers-in-law spoiling the grandchildren or dressing the children in clothes which the mother considers unsuitable (too large or rather old-fashioned) but because they are made by the co-residential grandmother the mother feels no option is open to her to change the child's clothes. At least one two-year old child living in such an environment of constant tension between his mother and grandmother appears to be relatively insecure and afraid of strangers, while his mother seems to foster the child's

---

(69) The custom of rusuban, looking after a vacant house while the owner is away, is very common in Japan, but the attitude expressed in this case seems to be rather an extreme manifestation of the custom.

(70) This lady expressed a feeling of great relief and gratitude at being able to visit the anthropologist's wife for English conversation once a week, and on one occasion when they went to a local supermarket together this lady said she never knew of the existence of this supermarket in the area.

dependency on her to an excessive extent by letting him do whatever he wishes without restraint or punishment[71]. Her attitude is reported to be a culturally normative one (cf. Benedict 1946: 263-4; Befu 1971: 152-161) but appears to be taken to extreme lengths (beyond that of most other Japanese mothers) on account of her desire to win the child's support and affections to herself instead of to the child's grandmother.

Social relationships among neighbours

Social networks and friendships among the men in Sakurano are largely formed through associations at place of work, company clubs and residential proximity, whereas Aoyama men often have very limited contacts with other men in the area, their conversation often consisting of no more than passing the time of day with one of the neighbours if they happen to meet. Only those working for the same firm tend to have social relationships with each other at the weekends, and then only on an intermittent or infrequent basis such as their families joining together to make rice-cakes (mochi) before New Year. Therefore most day-to-day social relationships in both areas are largely the domain of the wives.

In Sakurano those living opposite each other on the same floor often form closer friendships than most (cf. also Rohlen 1974: 230), but children of similar ages often provide links between other families.

---

(71) Although Japanese boys are often allowed considerable freedom in their early years (Benedict 1946: 253 ff.; Befu 1971: 152 ff.), a number of mothers do punish or cajole their children to some extent, sometimes by beatings and at other times by exclusion from the house, letting them cry outside for an hour or more. However, this particular mother lets her child do whatever he likes, it seems, and tells other children to let her son play with their toys. The boy often grabs whatever the others are playing with and he is therefore resented and disliked by other children. Doi (1980) stresses the Japanese desire for dependency on others which is fostered by child-rearing patterns, but this particular case appears excessive and is most likely an over-indulgence of the child in the context of the rivalry for the child's affections between his mother and grandmother.

For many housewives a social nexus is provided by recreational activities like tennis or classes in flower arranging or other traditional arts arranged on their behalf by Nissei. Most of these are within the sphere of company-sponsored activities, and those activities outside of this sphere are either family outings or occasional shopping trips or visits to classical concerts or cinemas by two or three Nissei wives together. Those who regularly participate in activities outside of the company sphere tend to keep quiet about them for fear of gossip. Perhaps an extreme example of this may be Mrs. Tsuchida, who in 1980 joined an English class run by a foreigner. The venue of the class rotated monthly among the homes of the participants, but Mrs. Tsuchida, the only shataku resident in the class, refused to let the classes take place in her apartment. She could not face the gossip which would be aroused by a group, including a foreigner, coming to her flat on a regular basis.(72)

Several women in the shataku expressed their dislike of shataku life "because there is so much rivalry and competition among people in terms of their husbands' position at work or the childrens' education", and similar views were intimated less directly by others. On account of the very fact of all the husbands being employed for the same firm there is considerable covert jealousy regarding speed of promotions, minor differences in status and types of accommodation. These jealousies also arise through the differential performance of children at school, partly because mothers with children of similar ages tend to live in adjacent apartments, which has the positive advantage of enabling the children to

(72) However, the following year, when the anthropologist and his wife came to the area, Mrs. Tsuchida was willing to invite foreigners round because they were acquainted with many of her neighbours and were not limited to contacts with her.

play together often but also the negative effect of intensifying what jealousies might arise. Similar attitudes towards shataku life are reported for company housing elsewhere by Kinoshita (1983) and Rohlen (1974), in which the women view the shataku situation 'as primarily negative in its effect on their own social life', causing them to be 'especially careful in approaching each other' (Rohlen 1974: 232).

Rohlen (1974: 227) mentions how in the shataku he describes mothers of preschool children 'often spend time in the open space between the two buildings, watching their children and exchanging polite comments', usually just two or three women at most. The same can be said of the Nissei shataku residents, where the level of conversation tends to be focussed largely on the children's development, the weather, hobbies and other relatively superficial topics, but avoid any deeper sharing of personal problems, political or social issues and real feelings about life (cf. also Ruth Lewis 1984). For example, Mrs. Nishida and Mrs. Honda live opposite one another on the same floor of the same staircase in a 'B' apartment block and have known one another for 6 years. Both regard each other as their closest friend, but Mrs. Nishida says she deliberately holds back certain topics of conversation from Mrs. Honda out of a fear of the friendship becoming too claustrophobic. Partly this is because Mrs. Honda feels Mrs. Nishida should spend more time with her, whereas the latter feels she does not have the time to engage in long conversations.

Certain housewives are reputed to be gossips, however, and others may avoid telling them about even the relatively superficial affairs of their lives. Even so, gossip is feared and there is a widespread fear of being talked about. For example, Mrs. Yamada says she becomes frustrated when a group of neighbours is talking and she does not fully understand

all the inferences which are made about other people. Sometimes it may be as much as six months later before she fully understands, when a friend might explain them to her. Usually these inferences have a negative connotation about the other person. Mrs. Yamada finds all this very frustrating, but she is further frustrated by her husband's lack of understanding of the problem. Once she poured it all out to him but his only reaction was to dismiss it all as ridiculous so now she never tells him about these things. "He is", she says, "my husband", making a gesture with her hands indicating that he is in a separate category or world of his own.

Relationships are fragile and need preservation in the shataku to a greater extent than in Aoyama, simply because of the forced close contact between Sakurano neighbours. Mrs. Tsuchida, for example, says that when she meets a neighbour in the morning she feels unable merely to say "Good morning" - as they do in Aoyama - but instead she feels she has to enquire about the other's children or health and so on, even when she feels she does not have the time to enter into such lengthy conversations and is not particularly interested anyway. Even so, she needs to keep up the pretence because everyone else does it and it is the only way to preserve relationships.

She also says that life in the shataku is regarded by residents as a "temporary existence" or a "floating world - like a lily floating on the water and not yet rooted in a fixed place". They look forward to the time when they can have their own home, so they save up for it as much as they can. Mrs. Nishida looks forward to the time when she can live in a housing estate such as Aoyama because "people will no longer be on top of one another and relationships need not be so 'close'". When asked if she would then feel lonely, she said she was sure there

would be someone like Mrs. Honda to whom she could relate as a friend[73].

However, the grass is not necessarily greener in Aoyama, only different. There is a greater variation in housing and income levels but less jealousy over minor distinctions in company rank, partly because Aoyama residents work for a variety of firms[74] and partly because all have attained their aim of owning their own homes and are able to extend them if they wish, rather than being jealous about minor differences in company housing. Nevertheless, there is a similar fear of the Friday morning gossip groups when the rubbish is put out and of the other regular gossip gatherings. There is a similar superficiality in conversational topics, avoiding personal or controversial subjects, even between spouses[75].

Some of the responses to this situation are symbolised in house and garden arrangements reflecting the personality of the housewife. Mrs. Akaike, for example, lives on the corner of a block and puts out her pot plants and bonzai trees on the street outside (between the public drainage ditch and her garden wall). This gives the impression

---

(73) When the Tsuchidas moved to Aoyama in 1984, Mrs. Tsuchida maintained close friendships and frequent visits with her former neighbour of the same landing and staircase in the shataku. Such maintenance of friendships is not uncommon when a shataku resident first moves to a nearby area.

(74) Nevertheless, those whose husbands work for the same firm occasionally, but not necessarily, form friendship cliques among themselves.

(75) Ruth Lewis (1984) describes an Aoyama housewife with whom she could have deep conversations about many social, political and personal issues, but this was possible partly because Ruth is a foreigner and outside the web of gossip relationships. Nevertheless, the housewife says she never discusses any of these things with her husband either.

of a pretty but almost impenetrable cover, rather like her personality: she giggles profusely as a cover for embarassment when talking but reveals very little about herself. When her neighbour brings the kairanban (announcement board for local notices[76]), Mrs. Akaike comes to her garden gate to receive it, might exchange a few greetings if they are initiated by the neighbour, but quickly disappears into her house again. Another semi-recluse is Mrs. Takeo, who lives in a house on a kind of promentory with steep walls down to the rice valley on three sides and on the fourth a wall with six-foot tall metal gates next to the roadside. When visitors come she first finds out who they are over the intercom connected to the bell at the gate, and if she needs to have any further contact she comes out and speaks through the gate rather than opening it. She keeps her garden immaculately neat inside the gates, and when it was her turn to become a representative on the neighbourhood council (jichikai) she was very vociferous about the manner in which refuse is collected and about the bits left strewn along the road after its collection: her tirade about the disposal of rubbish continued long after the others had lost interest in the subject at one jichikai meeting. She is a far remove from the Ikedas, another Aoyama family, who are a 'lower-middle-class' 3-generational family of rural background. Their small house has no garden between its doorway and the road, only a small path and a parking space large enough for two vehicles. When visitors come one of the Mrs. Ikedas usually comes out through the back door from the kitchen and talks to them in the parking area or street, leaving the kitchen door open. When the visitors are invited inside, it is through the back door, across the kitchen area to a kotatsu (or in the summer to a low table) at one side of the kitchen area itself, where the family sit

(76) This is distributed by the local neighbourhood council, jichikai, through its system of block representatives, to be described shortly.

and talk normally. They are generally relaxed and open about personal details and attitudes to life, and this fits with their domestic arrangements. Most of their neighbours are more formal, however, and fall somewhere in between the Ikedas and Takeos on a formality-informality continuum.

Local Organisations: P.T.A. and Jichikai

Local neighbourhood organisation at the micro-political level tends to be influenced to a high degree by the presence of Nissei and the influence exerted because of its very size. While this influence is most marked in the case of Sakurano residents, it also extends to the organisation of the P.T.A. at the local primary school, located in Fujino-chō.

The catchment area of the school includes Sakurano, Fujino, Matsubara and Aoyama, plus another similarly recently-developed large area in the next valley beyond Fujino and separated from the school by forested hillsides and three small reservoirs(77). Many local housewives are involved in the P.T.A. activities, the P.T.A. meetings for parents, held at the school, usually having an attendance of several hundred, especially when there is a guest speaker. To a large extent, this participation in the P.T.A. is a reflection of the value placed on education as a channel for social success in Japan, but those who are particularly involved with the P.T.A. and who encourage their childrens' studies are the mothers (cf. also Vogel 1963: 49, 53, 110-111). The mothers often take on themselves the responsibility for their childrens' mistakes, such as apologising to the teacher if a child forgets to

(77) This other area contains one principal ward with a population of 1,189 in 374 households. Two other small wards containing 59 people (17 households) and 168 people (55 households) lie below Fujino near to the factory and are also included in the 7 wards consituting this school zone.

bring a handkerchief to school, for example, since a daily check is made to see whether each child has clean and well-groomed fingernails, a handkerchief and some tissues, the results for each child being tabulated on a graph in the classroom. There is therefore considerable pressure on the mothers to ensure their children keep up to the expected norms, not only in matters of not forgetting various items but more importantly in academic performance. This leads to some covert rivalry between mothers and to jealousy if one of them has a place on the P.T.A. committee sooner than would normally be expected.

This happened in 1982 to Mrs. Kimura, an Aoyama housewife whose son was in the 3rd year at the school but was asked to become a committee member on the P.T.A. Normally only parents whose child is in the final (6th) or penultimate (5th) year are asked to be committee members, so Kimura-san experienced what she considered to be a certain coldness or semi-ostracism on the part of a number of other parents during her year in office. Whether or not her subjective impressions were objectively true is irrelevant in so far as social relationships are perceived and reacted to according to such personal evaluations of the situation.

The influence of Nissei is seen in the membership of the P.T.A. committee. Each year the members of the retiring committee each ask one of their friends to take over their position on the committee, and thereby ensure a continuity in the balance of power. Moreover, the chairperson (always a man) is invariably a Nissei employee and one of his two deputies is normally also from Sakurano (whether male or female), in addition to there usually being other Sakurano residents represented on the committee. The chairman is allowed leave of absence from his work at the factory whenever a P.T.A. committee meeting clashes with work commitments, and in this way Nissei exerts a certain influence over developments at the school.

The Sakurano mothers also form a distinct clique at the school, in the eyes of the headmaster and other teachers. If ever a child of a Nissei employee is thought to have been treated unfairly by a teacher, or suffers at the hands of other children (such as being pushed into the reservoir - for which the teachers are held, by the parents, to be responsible (cf. also Vogel 1963: 58-9), - the teachers expect complaints to follow soon. Word gets around the shataku wives, particularly the clique who meet regularly on the Nissei tennis courts, and they present their complaints as a body to the headmaster. They form a concerted faction which can put pressure on the school, whereas non-Nissei employees in the area have a less cohesive network of other mothers to draw upon if they need support for a particular complaint involving only their own child.(78)

Each ward has its own neighbourhood council, jichikai, consisting of representatives chosen on a rotating basis from each houshold in turn. One representative is from each block of houses (or apartments for most of Sakurano); depending on the area, the succession is decided either by proximity (from one house to the next) or length of residence, the latter being more common. Each committee serves for one year only, but in the Sakurano shataku only the chairman, deputy chairmen and those responsible for the childrens' physical exercise and womens' activities (kodomobuchō, taiikubuchō and fujinbuchō) remain for the whole year because they need to relate to the jichikai of other wards regarding the sports days and other events for which it is better to have more continuity throughout the year. The block representatives (kumichō) rotate

(78) Sakurano mothers' ability to mobilise support for complaints does not reduce the covert friction between them regarding their childrens' relative performances, however. On the contrary, the very fact of close proximity (particularly in the apartments) and the fact that near neighbours have children of similar ages who attend the same school seems to intensify rather than reduce the covert rivalries.

each April and October, however, a system which gives more opportunity for each household to share in the tasks during their time in company housing before they buy their own more permanent homes. Although in theory any member of the representative households can act as jichikai representatives, in practice the responsibility tends to fall to the wives, especially in Aoyama where the men have longer average work hours and commuting times than in Sakurano. The chairman, his two deputies, and treasurer tend to be men, however, the chairman being the oldest man among the group[79]: each year the new jichikai representatives meet together and elect from among themselves the chairman and other officers to form the executive committee, and appoint others with particular responsibilities such as organising sports events and social activities, ensuring the street lights in the area are working properly, organising public ditch cleaning, promoting traffic safety in the area[80], duplicating the jichikai announcement or information leaflets or liaising with the local sewerage company[81]. Those households allocated relatively minor responsibilities tend to be those where the husband is either unable to participate in the jichikai because of work responsibilities[82] or soon drops out of the meetings and leaves his wife to act as representative.

---

(79) In 1981-2 one of the deputy chairpersons was a woman, the wife of a very wealthy independent businessman, who was known for her unusually forceful personality. Her place on the local jichikai was also regarded as exceptional for a woman.

(80) In 1983-4 it was a man who held this post, indicating that it was regarded as a relatively important one.

(81) In Aoyama there is a private sewage disposal plant at the bottom of the hill, serving Aoyama residents only.

(82) The jichikai normally meet once a month on the second Saturday night, a time when in theory most businessmen should be available.

The representative of each block visits each household on a fixed date each month[83] to collect the 1,800 yen monthly subscription fee from all those using the ward's private sewage disposal system[84], plus a further monthly fee of 200 yen from all those who have decided to become official members of the jichikai. The latter money is saved up over the months and is used to purchase prizes and refreshments for all those from the ward who participate in the annual sports' day. It is also used in Aoyama to provide prizes for the children's games in the afternoon of their summer festival, but in Sakurano the company also gives a contribution to this through hiring one or two childrens' films shown on that evening. These events will be described in chapter 11. Almost all households do subscribe to the jichikai fund, but since most of the money goes towards chidrens' events a few households without children do not join the jichikai.

The jichikai also receives some payment from the city government for disseminating public information on their behalf, particularly the city council's free newspaper, 'Ueno Living', produced every month. To the extent that this has transformed the jichikais into organs of the local government, it has aroused the antagonism of one Aoyama woman, Mrs. Kawashima, who maintains that the jichikai should be what its name means - a self-governing council - and therefore she refuses to join it. This woman in her early fifties might be regarded as rather eccentric in the lengths to which she goes to voice her protest, however, in so far as she insists that the town hall send her her personal copy of 'Ueno Living' through the post rather than having it distributed by the jichikai like everyone else. Not only that, but she also started, in January 1977, a 'mini-communication news-sheet' produced by herself

---

(84) Almost all households in Aoyama subscribe to this system, but a few continue to use the older style toilets which require a sewage disposal van to pump out the contents at periodic intervals, the cost depending on how many litres are pumped out each time.

(occasionally with articles by others) containing news about local events, including not only neighbourhood events such as the sports day but also news on festivals at shrines or temples in the area, recipes[85], gardening tips[85], nature conservation (such as the use of the river and other water resources), waste disposal in the city, the cost of P.T.A. annual subscriptions at local schools, welfare problems (those affecting the aged in particular) and the history of some of the stone images which are foci for worship in the prefecture[85]. The news-sheet consists of low-quality paper duplicated on both sides, illustrated sometimes with cartoons, the contents written by hand onto a stencil by Kawashima-san herself. The total cost for the paper (about 1,100 sheets per month) and duplicating comes to almost 2,000 yen monthly (almost £6), in addition to which she pays a friend of her teenage son 1,000 yen each month to distribute it to all the households in Aoyama. The jichikais of Sakurano, Fujino and Matsubara distribute the news-sheet for her free of charge but the Aoyama one refused to do so (presumably because of her negative attitudes towards them)[86].

Kawashima-san tends to be evasive if asked questions about herself, her background or beliefs, and when asked why she started this mini-communication paper she embarked on a long history of the area and where the people had come from, saying that they had no previous relationships with one another and had come from a wide catchment area to these recently-developed neighbourhoods. Her implication is that her news-sheet

---

(85) These have been regular serials each month; the other topics cited are frequently found but not always every month.

(86) It may be that their policy towards Kawashima-san affected the majority of the jichikai representatives' attitudes in 1981 when the anthropologist asked whether the Aoyama jichikai could assist in the distribution of his questionnaire in the same way as the Sakurano jichikai had co-operated in it. If the Aoyama jichikai had co-operated with the anthropologist, they would have set a precedent by which they would have had no grounds to refuse to distribute Kawashima-san's monthly news-sheet.

provides a means of fostering a sense of 'community' in the area, though she does not say so in so many words. It is unlikely that such altruistic aims would be achieved by one more pamphlet through the post box each month to households already receiving plenty of unwanted advertisements, but a more tangible result of her efforts is the establishment of a rival to the jichikai. One of the jichikai's functions is to distribute public notices for the town hall by a system of kairanban, clip-boards passed around each block from the block representative, often including at the same time advertisements from local firms or organisations. When each householder has read it, he or she affixes his or her seal (equivalent to a signature) on the document and takes it to his or her neighbour, and so the kairanban is passed around the block. Kawashima-san's news-sheet not only provides different kinds of local information in a pseudo-magazine format but also sets her up as a source of local information and as a go-between, if required, for negotiating between two neighbours with no previous contact with each other[87]. By acting as a broker and well-known source of information in the area, her own status in the general neighbourhood is enhanced.

One other significant exception to the general rule that almost everyone participates in the local jichikai is a group of twelve independent houses, mainly of wood and some looking a little neglected in their external upkeep, which form an isolated group by themselves in the triangle of land between the reservoir, the fenced-off edge of the Sakurano hillside (on the opposite side from most of the shataku buildings) and the motorway. In terms of their postal address, these houses form one block of Sakurano-chō, but they have no representation on the

(87) For example, she was once contacted by a local resident who wanted to find out if the anthropologist's wife would be willing to teach English and who needed a go-between rather than approaching the foreigner directly.

Sakurano jichikai. They therefore receive no kairanban or copies of 'Ueno Living' and do not participate in the local sports days. The reason for their exclusion is not only that they are not Nissei employees and their houses are not shataku but also that they are Korean immigrants. Discrimination against the Korean minority is widespread in Japan (cf. Mitchell 1967; Lee and De Vos 1981), as is discrimination against the 'burakumin' or 'eta' outcaste groups (cf. De Vos and Wagatsuma 1966; Yoshino and Murakoshi 1977). However, none of the Sakurano residents questioned about the Korean community would admit to any discrimination on the part of themselves or their friends, but several would say they had "heard" that "a few people" do forbid their children from playing with the Korean children who attend the same primary school. When the chairman of the P.T.A. committee in 1983 was asked about discrimination against the Korean minority, he appeared distinctly embarrassed and tried to steer the conversation onto more general issues relating to Japan as a whole rather than specific local problems.

The Sports Day (Undōkai)

This is one of the two main community events organised each year by the local jichikais of the district. The city is divided up into a number of school zones, each holding their sports day at their local primary school; Sakurano, Aoyama, Fujino and Matsubara constitute over 80% of the households in the school's total catchment area[88]. Each local jichikai encourages as many households as possible to take part in at least one event on the sports day, which is always scheduled for a Sunday so that as many households as possible can participate. If the weather is too wet on the scheduled day, and the jichikai chairmen decide

(88) There are 2,038 families in these four wards, and 2,484 families in the whole school catchment area.

among themselves by telephone to postpone the sports day until the following week, word is quickly passed around to each household via the jichikai representatives for each block. Since the sports day normally takes place in the autumn (September or October), it is often affected by the typhoons which pass at that time of year and bring heavy rain also to wide areas not directly in their paths.

By 8.30 a.m. on the morning of the sports day the jichikai representatives have laid out tatami matting underneath the booth for their area which had been erected the previous day. These booths consist of open-sided tents, often bearing the ward's name on their roofs, set up in a row at the side of the sports pitch(89). As members of their wards arrive, the jichikai representatives help usher them to designated areas at one end of the pitch, where they wait in lines, two abreast, until the opening ceremony at 9.00 a.m. They then file out in a long line, one ward after the next with a placard at the front designating their ward, walking around the circumference as music with a beat not far removed from marching music is played over the loudspeakers. After one lap the leading ward turns in towards the centre and forms a column two abreast by itself, the following wards then lining up separately in parallel columns. They then all face one end of the pitch as the Japanese flag is hoisted up and the national anthem is played, all remaining silent. At the end of this they turn to face a city councillor who climbs on to a podium to the front of the columns and briefly addresses the assembled participants, telling them to do their best (ganbaru) and formally announcing the opening of the sports day.

---

(89) 'Playing field' suggests a grassy area, whereas 'sports pitch' is more neutral for describing this wide area of packed earth and sand bereft of grass.

The rest of the day consists of sports events, mainly those for children in the morning, starting with the youngest, and progressing on to adults' events in the afternoon. Families come and go during the day (each having received a pamphlet in their post boxes a few weeks previously giving the timetable of events), many bringing a picnic lunch to eat in their ward's booth. Each local jichikai also provides some snacks for all who attend from their ward. People participate in whichever events they like, whether running races or tug-of-war, though the jichikai representatives try to ensure they have enough competitors to enter each event. Finally at about 5.00 p.m. those remaining who have participated in any event line up again in columns in front of the podium, the overall results are announced and trophies (cups or shields) for each of the main events awarded to each winning ward; certificates are presented for runners-up. These trophies and certificates are kept in each jichikai building on display throughout the year, each ward having a separate jichikai building (ward office) for such purposes which may be used also for public meetings or for some local societies or clubs. It is usually Sakurano which wins the overall trophy on the sports day because of its higher proportion of younger men, but after the trophies have been awarded and everything has been cleared up each local jichikai meets for drinks in their ward office and discusses the day informally, the general spirit being that they might do better next year but that will be the responsibility of the next jichikai. Each jichikai is relieved that its major events of the year are now all over and it has discharged its responsibilities to the best of its ability.

The sports day is the only event of the year to include all the local wards together. It might promote some kind of a 'community spirit' for the day but any such feeling tends to be forgotten soon afterwards in the humdrum of everyday life and social relationships. By competing against other areas, the members of each ward are brought

together in social co-operation but recruitment to the events is largely on a voluntary basis and there is freedom for families to come and go as they wish according to which events they participate in. Those who talk together in their ward's booth are largely cliques of existing friends or family groups who might greet some of their neighbours and perhaps exchange some general gossip, but it is not a time for discussing anything other than relatively superficial comments; rarely do these contacts with neighbours afforded by the sports day develop into any deeper relationships afterwards.

The sports day contains no 'religious' element which is in any way apparent. There is no connection with any institution, place or behaviour which brings the people into any relationship with any 'spiritual' plane of existence, so there is no justification for calling it in any way 'religious'. However, its function as a symbol of community identification, if only for a day, and its bringing together people in the ward into some kind of co-operation or contact with each other, however superficial, are replicated in the summer festival, which does contain some degree of 'religious' symbolism, a description of which will therefore be left until chapter 11.

Other community activities

The only other communal activity involving all households simultaneously is the cleaning out of the drainage channels which run along the sides of the roads in front of the houses. These deep gutters, about 18 inches deep, are covered by metal grids where they pass under the road or lie in front of garages, but elsewhere have no covers at all. They collect rain and bathwater and channel the water down the hill and into the irrigation channels for the rice fields in the valley below Aoyama. Though stone lined they gradually collect a layer of slime and

mud so need regular scrubbing. This is done once a year in May in both areas, and at the same time public property such as the grass outside the jichikai building and the small play area parks are weeded and tidied up.

Each household is expected to provide at least one representative to help with the neighbourhood cleaning day, and no household risks the shame involved in not participating without a very good reason for absence. A jichikai official assigns tasks to each block[90] so that all neighbours on the same block work together and any absences are conspicuous. Approximately half the blocks work on ditch cleaning along the roads outside their own blocks and half work on the parks and other public property. Work begins by 8.30 a.m. on the Sunday morning appointed, and at about 10.00 a.m. a municipal refuse van arrives to collect the piles of weeds and heavy sacks full of mud which have been collected. Everyone then disperses back to their homes.

A not dissimilar activity is the 'big rubbish' (ōgata gomi) day each year in March. At this time all the items of furniture which are no longer needed or have broken are thrown out. Partly this is a reflection of the relative lack of space in Japanese homes, partly a product of the high standard of living and partly a result of there being very little of a second-hand market for goods other than motor vehicles in Japan[91]. These factors together produce what might appear to be a

(90) More than one block may be assigned to some jobs.

(91) There are second-hand and scrap merchants (gomiya-san) but they are relatively few; several are Koreans or burakumin (outcastes). (cf. De Vos and Wagatsuma 1966: 123, 127, 132; cf. also Yoshino and Murakoshi 1977:70). Most middle-class Japanese prefer to throw out their unwanted furniture rather than go to the trouble of finding a gomiya-san or hiring a handy-man (benriya-san) to dispose of the items for them.

'culture of affluence'[92] in middle-class Japan.

The affluence is reflected in what is thrown out: stereo sets needing just a replacement needle, refrigerators, stoves, tables, chairs, bicycles, beds, televisions, mattresses and other types of furniture are all commonly thrown out after several years' use when a newer model is desired, or if they are no longer needed because a daughter has recently married or a parent has died. These are thrown out on the 'big rubbish' day. Two weeks or so beforehand a notice is distributed by the jichikai to all households explaining what kinds of things can be put out and where. Similar notices are put up on boards at the designated collection areas: T.V.s, fridges, stereos and bicycles on the left, other household furniture on the right. Before 8.00 a.m. on the appointed day a pile has already been started, and from then on until 9.00 a.m. more and more items are added. About 9.00 a.m. the municipal lorries arrive. Tables and similar wooden furniture are loaded onto an open truck while fridges, televisions, stereos and so on are thrown into a refuse truck which crushes them up as they enter. The four men who throw all the refuse into these vehicles take at most 10 to 15 minutes to collect everything from each collection point[93] before moving on to the next, but even as they do so there are sometimes still people bringing things to be taken away. A few individuals do use the opportunity provided by the 'big rubbish' day to find spare parts for bicycles etc. but take only very little of what has been thrown away.

---

(92) The comparison implicit here is of course with the 'culture of poverty' described by Lewis (1964). While there are areas of Japan where poverty exists, especially among outcast groups (Yoshino and Murakoshi 1977: 72-4) the affluence of most middle-class areas has produced an outlook of life which could be called a 'tsukai-sute' mentality: 'use and throw away' rather than 'use and repair if necessary'.

(93) There are two in Aoyama and two in Sakurano.

This day does provide some opportunity for discourse and conversation among neighbours around the pile of refuse, even though this day is not a 'community social event' as such. In the same way the regular weekly collections of household rubbish provide opportunities for housewives to meet informally and chat. Burnable rubbish is collected on Tuesdays and Fridays, unburnable on Thursdays each week, except in the fifth week of a month when there are no collections. The rubbish bags are placed in heaps by certain designated lampposts in the area, each collection point serving about a dozen homes in Aoyama or one block of flats in Sakurano. Local housewives (occasionally husbands) put out the rubbish usually between 8.00 and 8.30 a.m., after most of the husbands have left for work, and the occasion often is one for greeting other neighbours and talking for a while. This is especially so for mothers with older children who do not need to be seen off to school and for others during school holidays. Even in the rain there have been times when a group of half a dozen housewives will talk under their umbrellas for over half an hour around the pile of rubbish bags. The expression 'well-side gossip' (idobata kaigi) was used to describe housewives' gossip in traditional rural Japan: the modern equivalent seems to be 'refuse heap gossip'[94]. It is particularly conspicuous in one part of Aoyama on Friday mornings when a Mrs. Satō has her day off and talks with two of her neighbours for over an hour each week in the street; other neighbours hear this group's giggling and laughter and wonder whether they themselves are the topic of conversation.

Many other housewives prefer to reserve their gossip for the mobile market which comes to the area on Tuesday and Friday mornings too. It is a family concern run by a father and son and their wives who set up a

(94) The Japanese expression would be 'gomi no yama kaigi' but in fact such a term has not yet been coined!

large awning on a vacant housing lot not far from the main entrance to Aoyama. Their produce is normally cheaper and fresher than that in the supermarkets - especially for eggs, vegetables, fruit and fish[95] - so attracts housewives from Sakurano, Fujino and Matsubara as well as those in Aoyama. They are not supposed to go to the market before 9.00 a.m. in order to give time for all the produce to be set out, but many try to be there as soon as possible after that (between 9.00 a.m. and 9.30 a.m.) to buy the better bargains. This means they have to stand in a long queue for over a quarter of an hour and take the opportunity to gossip with their friends. Many who buy a boxfull of produce leave their addresses with the market vendors for the goods to be delivered round to their homes after the market packs up later in the morning. They are then less encumbered while talking with their friends afterwards in the street next to the market area.

Another trader, who visits the area on Wednesdays and Saturdays selling vegetables and fish, has a van with a loudspeaker announcing his wares. He comes in the later afternoon and drives slowly around the area, stopping by certain houses where he has regular customers. These are generally older residents or working mothers who are less able to travel to the supermarkets and housewives who have unexpectedly run short of something. As this vendor's prices are not as cheap as those of the mobile market fewer residents buy from him, and his van does not provide an opportunity for much social contact between neighbours. The same may be said for the other traders who visit the neighbourhood - the bean

(95) They also sell some produce in packets such as biscuits which are cheaper but not necessarily fresher than elsewhere.

curd (tōfu) seller and the collector of old newspapers for recycling[96].

At the entrance to Aoyama there is a grocery shop, at the back of which lives the shopkeeper's family. This attracts custom from Sakurano and to some extent Matsubara too, particularly for those who need something quickly without going down to the Nishiyama high street (beyond the Nissei factory). This can provide a meeting place for housewives who happen to go there at the same time, but most gossip is over the counter between the shopkeeper's wife and the customers. The shopkeeper keeps abreast of what is happening in the area and knows who most of the local inhabitants are and where they live: the husband delivers goods to the house if requested and each year before New Year they distribute a gift to each household through the letter boxes, one year a calendar bearing advertisements for the shop, another year a book on household tips clearly stamped 'with the compliments of Aoyama shop'. In the Spring of 1982 a new supermarket was opened just beyond the bus stop for Aoyama, centrally located to attract custom from all four local wards[97]. While this threatened to some extent the livelihood of the Aoyama shop, by 1984 it was still thriving and had been given a smart new frontage and display window. Though still selling household products (the prices slightly reduced on some lines to equal those of the supermarket), more emphasis was put on the wine and beer trade so that it had become more predominantly an off-licence.

---

(96) The latter receives relatively little trade in this area anyway because on the fourth Saturday morning of each month there is a collection of old newspapers (plus old clothing, less commonly thrown out), used bottles and cans, each put in separate blue plastic crates at designated lamp-posts, which are collected by the P.T.A. of the local primary school for recycling, the proceeds going to the P.T.A. Most households give to this, especially those with children, but may give to the other vendor if they already have too many newspapers to store easily. In return he gives small packets of tissues (one or two per household, depending on the amount given).

(97) This also became a centre for local residents if they happen to meet one another and to chat for a few minutes.

There is also a dry-cleaning business in Aoyama which caters for customers in all four wards but tends not to provide a nexus for gossip or social interaction. One housewife in Aoyama also runs a tobacconist shop and sends off photographic films to be developed but these are both side-lines to her husband's salary as a businessman in a local firm. This shop is frequented mainly by Aoyama residents but Sakurano or Matsubara men sometimes use its vending machine at night when the shops are shut and they have run out of cigarettes.

Finally, one other event which brings together some of the men in Aoyama, Sakurano and Matsubara each year is a running race organised by the local jichikais around the area on New Year's morning. This attracts between 30 and 40 participants each year, but does not give rise to other contacts between them throughout the rest of the year except among the groups of existing friends who decide to take part.

All these institutions - sports and leisure activities, ditch cleaning, and shopping facilities - are common to the whole area, though only the sports day attracts the majority of residents of all four local wards, plus other wards in the same school zone. The summer festivals (cf. chapter 11) also bring together people in the same ward once each year but not everyone participates. Other events such as the market and refuse collection bring people together at regular intervals but those who talk with each other are normally cliques of existing friends or acquaintances in the same network. Gossip is spread partly through these regular contacts, partly through meeting places like the local shop, and partly through friends visiting each other or talking over the telephone.

The jichikai system can be regarded as a 'grass-roots' extension of the wider political system responsible for disseminating information through the kairanban system and for organising local neighbourhoods for chores such as communal ditch cleaning. For the sports day, however, it becomes part of the wider school zone level of analysis. However, local political organisations need to be seen in an even wider perspective and context, whether that be the city, prefecture or nation, as Ben-Ari (1984) has recently demonstrated for another Japanese neighbourhood. Therefore wider political attitudes and voting behavour deserves some mention, particularly regarding the influence of the Nissei union. This in turn, however, has some implications for an understanding of religious attitudes, which will form the foci of the following chapters, so it is best to discuss political and religious affiliations together.

Political and Religious Affiliations

The role of company support for a political party is manifested in voting behaviour and financial donations, whereby the Nissei union supports the Democratic Socialist Party and local D.S.P. candidates are almost invariably former Nissei employees. In the Sakurano company housing 73.8% of the men voted for the D.S.P., as did most of the Nissei employees living in Aoyama-chō; the result of this support is that an ex-Nissei local D.S.P. candidate is virtually guaranteed a seat on the local council and can thereby influence local government policy from within.(98) Since the Nissei management were formerly union members too, and since they have a vested interest in having a local councillor with Nessei links and sympathies, most of them also vote for the D.S.P. Hence there is no sharp cleavage in political views between the management and union, a convergence of interests and mutual co-operation which is manifested also in the union's participation and representation in some of the company's religious rites to be discussed in chapter 12.

(98) In the July 1983 city council elections a total of 3 D.S.P. candidates from Nissei obtained seats on the council.

The Nissei union belongs to Dōmei[99], one of the confederations of trade unions in Japan, and the Nissei support for the D.S.P. is largely a result of Dōmei's support for that party: however, the union leader who became the local D.S.P. candidate in 1984 also considers that it is important for the union to avoid extremes to the left or right and the D.S.P. satisfies this 'middle-of-the-road' policy[100]. Nevertheless, the fact that one quarter of the Nissei employees living in Sakurano did not vote for the officially sponsored party indicates that the union or firm is by no means a homogeneous, united political force. Those who did vote for the D.S.P. said that they did so because they knew the candidate personally (as he lives in Sakurano too) or out of loyalty to the union, but those who voted for other political parties never publicised their dissent but kept it to themselves. The two men belonging to the Sōka Gakkai, a large new religion which sponsors its own political party, the Kōmeitō ('Clean Government Party') made public their Sōka Gakkai membership which almost automatically tends to indicate a support for the Kōmeitō, with a few exceptions (Basabe 1968: 45) - but did not discuss their political views with their neighbours or let it be known that they had not voted for the D.S.P. (largely, it appears, from a fear of criticism or decreased social acceptance). No clear correlation was found between any other religion and voting for non-D.S.P. candidates, owing to the small numbers involved. However, the actual number of those who voted for other parties amounted to only 25 men beause 31 men

---

(99) The Japanese Confederation of Labour (Zen Nihon Rōdō Sodomei, or Domei for short, containing 17% of organised labour, is supported by textile workers, among others (Ike 1972: 48-54).

(100) Another Nissei employee put it a different way, however, saying that it was "safer" for the union to support a centrist party rather than one on either extreme. His use of the word 'safe' is interesting in view of the emphasis on safety in other aspects of Japanese life to be discussed in chapter 6.

(14.5% of the total) did not vote at all - in at least some cases on account of being away on company business at election time[101] - so the real percentage of non-D.S.P. voters drops to only 11.7%[102]. Among the 53 Nissei wives in Sakurano who filled in questionnaires, 9 (17%) voted for other parties - 7 for the Socialists and 2 for the Liberal Democrats, while 10 women (18.9%) abstained. All the others (64.2%) voted for the D.S.P. It would appear that support for the official union party may be weaker amongst the Nissei wives, many of whom dislike certain facets of their husbands' work - such as the firm's power to transfer them to another, distant plant at short notice - or some aspects of shataku life (jealousies and rivalries) but feel powerless to do anything to change the system. Non-D.S.P. votes (or abstentions, if voting for another party is seen as disloyalty to their husbands or the firm) are therefore silent, symbolic acts of defiance against the system.

Political views in Aoyama-chō reflect to a greater extent the political balance of power in the country as a whole, where the (Conservative) Liberal Democratic Party has held power since 1955, although its political base is stronger in rural than in urban areas (Ike 1972: 104-106). The political affiliations of Aoyama men and women are given in Table 2.12.

---

(101) At least two of these were absent on 3-year postings to Indonesia and Mexico to help with Nissei joint ventures there while their wives remained in Sakurano.

(102) Of these 25 men, 11 voted for the Socialists, 2 for Kōmeitō, 7 for the Liberal Democrats, one for Shaminren (the 'Social Democratic League'), one for an unspecified left-wing party (Kakushinkei = 'reformists') and 3 for Independent candidates.

Table 2.12 Political affiliations in Aoyama

	Men		Women		Totals	
	No.	Percent	No.	Percent	No.	Percent
Liberal Democrats	63	32.3	58	28.3	121	30.25
Democratic Socialist	37	19.0	29	14.1	66	16.5
Socialist	24	12.3	25	12.2	49	12.25
Kōmeitō	3	1.5	7	3.4	10	2.5
Communist	8	4.1	12	5.9	20	5.0
Shaminren	1	0.5	1	0.5	2	0.5
'Reformists'	0	0.0	2	1.0	2	0.5
'Conservatives'	2	1.0	1	0.5	3	0.75
Independent	2	1.0	5	2.4	7	1.75
New Liberal Club	3	1.5	4	2.0	7	1.75
Did not vote	52	26.7	61	29.8	113	28.25
Totals	195		205		400	

Notes on Political Parties

Liberal Democratic Party: The 'ruling' political party which has held power since its formation in 1955 by the coalescence of two smaller Conservative parties. It has a wide support base, notably among farmers but also among some businessmen, professionals, upper and middle-level civil servants and non-unionised workers.

Democratic Socialist Party: A 'right-wing Socialist' faction which defected in 1959 from the Socialist party and is supported primarily by the Japanes Confederation of Labour (Zen Nihon Rōdō Sodomei, or Dōmei for short), which includes unions in the textile and metal industries particularly, about 17% of unionised labour.

Socialist Party: A more left-wind Socialist party than the D.S.P., which gains its principal support from the General Council of Trade Unions of Japan (Niho Rōdō Kumiai Sōhyō Kaigi, or Sōhyō

for short), about 38% of unionised labour, including the major public sector trade unions such as the National Railways, teachers' union, prefectural and municipal workers and postal and telecommunications unions.

Kōmeitō: 'Clean Government Party': The political arm of the Sōka Gakkai, a major Buddhist new religion claiming over 16 million members.

Communist Party: Self-explanatory, except that the party's policies moderated in the 1950's so that it has attracted more support from some intellectuals, middle-class women and those in smaller firms who are dissatisfied with aspects of their society.

Shaminren: An offshoot of the Socialist Party, formed in March 1978 from the Socialist Citizens' League which broke away from the Socialists in May 1977. Shaminren is short for Shakai Minshu Rengō, the Social Democratic League.

Reformists: (Kakushinkei): A general term for left-wing political parties without specification of the particular party.

Conservatives (Hoshutō): A general term for right-wing political parties, probably referring to either the Liberal Democrats or the New Liberal Club.

New Liberal Club (Shin Jiyū Kurabu): An offshoot of the Liberal Democratic Party since June 1976.

Independent (mushozoku): Self-explanatory.

(Information on these parties is culled from Ike (1972), Cole, Totten and Uyehara (1966), Scalapino and Masumi (1962), and the articles on the respective parties and on 'political parties' generally in the Kodansha Encyclopedia of Japan (1983)).

Owing to the strong union support for the Socialist and Democratic Socialist Parties, as is evident from the Sakurano voting figures[103], political preferences are to a certain extent governed by the type of firm for which a person works. However, even despite this influence, there is an overall tendency among those who claim to have a religion for Shintoists to be more right-wing and Christians more left-wing, with Buddhists in the centre. Since less than 30% of the sample claim to have a religion at all, this pattern is most clearly seen by amalgamating the samples from both areas and excluding the smaller parties owing to their low representation in the sample. The exclusion of the Kōmeitō also means that the Sōka Gakkai adherents are not included under 'Buddhists' in table 2.13, their members accounting for at least 9 of the 12 people in the overall sample who voted for the Kōmeitō. Only those who provided details of their voting behaviour are included for the calculation of percentages, those who did not vote (or who left the question blank) accounting for 16.3% of the 104 Buddhists, 27.6% of the 29 Shintoists and 18.4% of the 38 Christians. The following table therefore represents the voting patterns of 87 Buddhists, 21 Shintoists and 31 Christians.

---

(103) This level of support seems to have increased since the 1950's and early 1960's, when, according to Cole, Totten and Uyehara (1966: 364-369), there were relatively low levels of support among the unions for D.S.P. policies, unless a private lack of support is not always manifested in public or even in the actual voting patterns at the polls, when union loyalties might take precedence over private reservations.

Table 2.13 Political support according to religious affiliation

	Socialists	Democratic Socialists	Liberal Democrats
Percentage of Shintoists	1 = 4.8%	8 = 38.1%	8 = 38.1%
Percentage of Buddhists	10 = 11.5%	36 = 41.4%	27 = 31.0%
Percentage of Christians	6 = 19.3%	18 = 58.1%	4 = 12.9%
Percentages of political affiliation among 370 'non-religious' voters:	50 = 13.5%	193 = 52.2%	90 = 24.3%
Total votes for each party as percentages of the total sample of 667 people:	67 = 10.0%	258 = 38.7%	130 = 19.5%

(Three of the five with 'another religion' such as Tenrikyō voted for the D.S.P. and one for the L.D.P.; two of the four members of 'another religion' living in the Nissei shataku voted for the D.S.P., presumably owing to union influence, but one voted for the L.D.P. and the other left the question blank).

The overall tendency for Shintoists to be more right-wing and Christians more left-wing is clear from these statistics even despite the union influence which is particularly noticeable among Nissei shataku residents. There are several factors which may account for this general correlation between claimed religious affiliations and political attitudes.

The link between Shinto and Conservative political parties might be attributable in part to the pre-war association between Shinto and nationalism (and also with the Emperor cult) except for the fact that 10 of the 29 Shintoists were born from 1947 onwards and a further 6 between 1942 and 1946. Moreover, 6 of the 8 Shintoists aged 45 and

over also identified themselves as Buddhists - such dual identification being relatively common in Japan - so that the 'exclusively Shinto' families tended to be the younger ones. Of these, 3 knew of a family member who had been a Shinto priest or helper at a shrine[104] and proudly upheld their traditional link with Shinto and two were families which had 'always been Shinto', using Shinto instead of Buddhist burial rites[105]. The others had no common denominator except for their relatively conservative political views which, among those Shintoists interviewed, also tended to be correlated with a more traditional style of house (such as the use of tatami [straw mat] flooring on which one kneels at a low table) and the serving of traditional style tea, rice cakes or other foods[106]. The connection with conservatism is reinforced when it is noted that six out of the eight Shintoists who voted for the D.S.P. live in the Nissei shataku, and of those Shintoists who voted for minority parties two were Conservative[107], two voted 'by the person rather than by the party' and one voted for Kōmeitō, the Sōka Gakkai party which is relatively Centrist. Only one lady voted for the Communist party - in a local election - but she subsequently voted for the Liberal Democrats in the national election of 1983.

---

(104) One of these was a great-granfather who had been a priest at a prestigious shrine in Kyoto, another was a grandmother who had served as an attendant (miko-san) at the Ueno jingū (a prestigious large shrine) and the father of one Aoyama housewife had become a priest after his retirement from their family business in a village of Mie prefecture.

(105) These are what Dore (1958: 313) calls 'out and out Shintoists'.

(106) One principal exception to this was a man who wrote 'Shinto' on his questionnaire but in the interview gave the reason for this as "my family have a Butsudan (Buddhist altar) so therefore of course I am Shinto". When his wife corrected him, saying that possession of a Butsudan made him a Buddhist he realised his mistake and said that therefore he was a Buddhist and not a Shintoist. This also illustrates the hazards of using such labels in Japan, and in the following chapters they will generally be avoided.

(107) One of these simply wrote 'Conservative' without further specification; the other wrote 'New Liberal Club', an offshoot branch of the L.D.P.

Buddhists tend to belong to more centrist political parties, including the Sōka-Gakkai-supported Kōmeitō party. Two types of Buddhists can be discerned: (1) traditional Buddhists belonging to one of the older sects, often older people with responsibility to perform ancestral rites for deceased relatives, and (2) those belonging to 'new religions' such as the Sōka Gakkai who are often younger people but include also older ones who had been converted in younger life. These Buddhist 'new religions' have appealed in particular to the lower middle classes and less educated segments of Japanese society, partly because they have:

1) simplified Buddhist doctrines into easily memorised formulae requiring relatively little intellectual effort (Thomsen 1963: 20-22; White 1970: 31, 36),
2) stressed forms of worship requiring little intellectual effort to comprehend, such as the repeated chanting of the phrase "Namu Myōhō Renge Kyō" ("Glory be to the Lotus of the Supreme Law") by Sōka Gakkai adherents (Basabe 1968: 32),
3) provided fellowship, discussion and counselling groups ministering to practical problems of everyday life rather than abstract doctrine, though a certain amount of the latter is included in an easily understandable form illustrated by frequent anecdotes (Dale 1975: 120-145),
4) incorporated an emphasis on miracles such as healing (Dale 1975: 144-5; Davis 1980; Offner and Van Straelen 1963).

For such reasons, and others, the new religions appealed primarily to lesser educated lower middle class people, later spreading to some of the upper middle classes to a more limited extent (cf. Ikado 1968: 107-8; White 1970: 63-5; Offner and Van Straelen 1963: 104, 243-5; Dale 1975: 52-3, 55-6). In the Ueno sample it is not surprising, therefore, to find that 68.4% of the Buddhists had not received any university

education, as compared with 53.2% of the sample as a whole. Both of the two Nissei men in the shataku belonging to the Sōka Gakkai had been educated up to high school level only, while the Sōka Gakkai adherents in Aoyama also lack a university education and are employed in small firms, one man as a draftsman in a small metal company and the other as the foreman/manager of a garage, both the garage and his home in Aoyama being rented rather than personally owned.

These factors promoting the spread of some of the Buddhist or Shinto-based 'new religions' may be contrasted with the popular Japanese stereotype of Christianity as presented by some residents of Sakurano and Aoyama. They consider Christianity to be "difficult to understand" because of:

1) the intellectual efforts required to understand what is commonly regarded as a 'foreign religion' and a book which is considered to be couched in archaic language difficult to understand; the existence of modern translations into everyday Japanese is not generally known.
2) The use of classical language in hymn books, which is often unintelligible to those unused to church language.

In addition, two other factors reinforce the contrast with the Buddhist or Shinto 'new religions':

3) an appeal to the educated upper middle classes through their desire to learn English, and the common use of such methods by missionaries to gain contacts, and
4) the virtual absence of a charismatic movement in most mainline denominations of Japan, including not only the absence of charismatic gifts such as healing but also the openness to other people, freedom and informality in worship and other features which characterise many charismatic churches in other cultures and which are also found to some extent in the 'more charismatic' Japanese churches.

The correlation between Christianity and left-wing political ideas can be traced back to the early 20th century, when many founding members of the Social Democratic Party, the Japan Federation of Labour and the Japan Farmers' Union were active Christians (Cooper 1983: 309), but most of those who claim to be Christians are those who have been educated at a Christian university (which generally are well known to have high academic standards) and call themselves Christians simply because they have had more contact with Christianity than with any other religion. Few of them continue to have any contact with a church subsequently (after leaving the Christian school or university) and most of them participate in rites or practices theoretically antithetical to Christianity and associated with Shinto or Buddhism (such as New Year shrine visits, possession of safety charms and observance of ancestral rites); nevertheless they continue to call themselves 'Christian' on questionnaires[108]. This accounts for the phenomenon noted in other surveys whereby the percentage of 'Christians' is consistently higher than figures derived from church attendance or membership records (Basabe 1968: 53), and the same is true of the present survey[109]. Nevertheless, these Christians are still more liable to hold left-wing political views, which may be partly attributable to the consistency between Christian and Socialist ideals of social justice, including a concern for the underprivileged

---

(108) Two Aoyama families who are still involved with a church, in one case fairly regularly, in the other case infrequently, attend the local 'United Church of Japan' (Nihon Kirisuto Kyōdan), an established Lutheran to Presbyterian type of Protestant denomination, but they continue to keep Shinto safety charms and to observe a number of other practices inconsistent with orthodox Christianity - one lady frequently admitting, with embarrassment during the interview, that her views and practices were different from those of the Bible.

(109) Stoetzel (1955: 191) and Norbeck (1970: 79) seem to assume that all who call themselves Christians in Japan are also (active) church members but this assumption may not be a valid one when interpreting sociological statistics on profession of Christianity.

and the poor, and may be partly due to the higher educational level of most Japanese Christians. Correlating religious affiliation with education, it is found that 62.9% of the Christians, 52% of the Shintoists and 31.6% of the Buddhists had received some kind of university education in the areas of Ueno studied[110]. Although Christians accounted for only 5.7% of the total sample, they constituted 9.4% of those with some kind of university education[111].

Those claiming to have a religion are still in a minority, however. Out of the 667 questionnaire respondents, the majority (73.6%) denied having any religion at all. Only 176 claimed to belong to a religion, as follows:

Buddhists	104 people	=	15.6% of the sample
Shintoists	29 people	=	4.3% of the sample
Christians	38 people	=	5.7% of the sample
'Another religion'	5 people	=	0.7% of the sample

Those claiming to belong to 'another religion' were adherents of other 'new religions' such as Tenrikyō and Ōmotokyō; the Sōka Gakkai adherents classified themselves as Buddhists. The above percentages include some double counting, however, in that eight people claimed to have more than one religion: six of these were simultaneously Shintoists and Buddhists, one both Buddhist and Christian and one all three religions together. Similar results indicating overlap of religious categories and an increasing percentage who deny having any religion at all

(110) The percentage for the sample as a whole is 46.8% with university education, including those who attended 'short-term' colleges ('tanki daigaku') which are also called 'universities' (daigaku).

(111) Even if those who had attended a short-term specialist university are excluded from the sample, the Christians still constitute 6.7% of those with a full-time university education.

have been commonly reported in studies of Japanese religion (e.g. McFarland 1967: 18-2; Morioka 1975: 3-4; Ikado 1968: 101-102).

Therefore religious identity tends to be partly a reflection of educational backgrounds and political views rather than a reflection of deeply-held convictions about religious matters. A minority may indeed hold an 'active' belief in these religious tenets, but many seem to hold their religious identity as a consequence of their backgrounds rather than beliefs, while a majority are unwilling to commit themselves to any particular religious identification even though they may in fact practise many types of behaviour which may be labelled 'religious'. The more relevant question therefore, is not how people identify themselves but what they actually believe and practice. The following chapters will concentrate on the beliefs and practices of the sample as a whole, mostly people who claim to have 'no religion' at all (almost three-quarters of the respondents) and reference will only be made to religious identity when this appears to be a relevant influence upon the results (especially for Christians and Sōka Gakkai adherents whose views tend to be more extreme).

The Social Context and Religious Practice

The social context outlined in this chapter has a bearing upon some types of religious expressions more than others, as will be shown in the following chapters. For example, house ownership profoundly affects whether or not a person pays attention to geomancy and the ideas about a 'devil door' (kimon) regarding which certain taboos should be observed. House ownership and the space available in a house also influence the likelihood of a household possessing Shinto god-shelves or, to a lesser extent, Buddhist domestic altars, as will be shown in chapter 3, although these are also linked to life-cycle processes. Such differences in religious behaviour are understandable only by reference

to the social context of shataku residence versus house ownership. Another difference comes from the very fact of living in shataku and working for Nissei, which means that some of the shataku residents are expected to participate in religious rites at the shrines maintained by Nissei on the Sakurano hillside, rites in which Aoyama residents do not participate because they live in a separate neighbourhood. However, other types of religious activities, such as the widespread concern with 'calamitous years' (yakudoshi) have no observable relationship to residential patterns except indirectly through differences in the average age of residents in Sakurano and Aoyama. Such practices bear some relationship to the more general emphasis on a person's age which is found in Japanese society and does not appear to be affected markedly by the particular local conditions in Sakurano and Aoyama. Both these neighbourhoods are in the large catchment area for the Iwadani shrine a few miles away specialising in yakudoshi charms, so that a wider social context needs to be considered for such practices than is available on the micro-level. Local conditions therefore influence some of the expressions of religiosity, but others need to be considered in a considerably wider context, even, in some cases, the context of 'Japanese society' generally rather than the specific local conditions. However, 'Japanese society' itself is not a monolithic entity but contains regional and class differences as well as personal idiosyncracies, so that reference to a wider context of 'Japanese Society' is generally to widespread patterns of behaviour and 'motivations' more than to institutional arrangements, but even the latter nevertheless may reflect some of the underlying 'motivations'. In the following chapters some of these widespread 'motivations' will be revealed through a study of people's attitudes to religious phenomena, and although such motivations are sometimes conditioned or triggered off by particular local circumstances,

such as house ownership, in other cases they are more widespread than the local area and less directly affected by local conditions. The social context is important for an understanding of some phenomena, therefore, and in such cases Sakurano and Aoyama will be discussed separately, but in other cases they will be discussed together where there are no meaningful differences between the two areas in terms of behaviour and attitudes towards some religious phenomena.

PART II

MOTIVATIONS

CHAPTER 3

MEMORY

Prologue: Shinto and Buddhism

The distinction between Buddhism and Shinto in Japan is to some extent an arbitrary one, in so far as the two became dissolved from each other by political fiat in 1868, before which Shinto shrines were often found in the precincts of Buddhist temples, Buddhist images, scriptures and decorations were used in Shinto shrines and the same priests often officiated at both institutions[1] (Kitagawa 1966: 201-2; Anesaki 1963: 334-5; Norbeck 1970: 45, 49; Holtom 1938: 56-7). Even today, the distinction is blurred in the minds of many people, as evidenced by their replies to a question on how many times in the previous year they had visited a Buddhist temple (o-tera): most informants gave a figure which amalgamated temples and shrines without distinction, and only with some difficulty could they then classify the institutions as Shinto or Buddhist, sometimes with one spouse asking the other to help clarify whether a particular place was a shrine or a temple[2]. Such attitudes

---

(1) The usual teminology which uses 'temple' for Buddhist institutions and 'shrine' for Shinto ones is here adopted, although some of the semantic problems involved in such translations are similar to those encountered by Southwold (1983: Appendix 1) in his discussion of Buddhism in Sri Lanka.

(2) This question was asked in order to compare results with those obtained by Dore (1958: 301), but it is not unlikely that the same lack of distinction was also prevalent among Dore's informants. Moreover, many of those interviewed distinguished between a few visits for the purpose of worship, such as at New Year, and many other visits for the sake of "sightseeing" which they did not normally include in the initial figure given in reply, even though they admitted that they usually do pray when they visit for "sightseeing". These issues will be discussed further in chapter 11.
In one family interviewed it was clear that a confusion about religious afiliation was based upon the type of household altar possessed by the family: the man called himself a Shintoist on his questionnaire and when asked the reason for this in the interview he replied "because my family have a Butsudan", a Buddhist altar. After his wife pointed out that such possession would mean he is a Buddhist and not Shintoist, he realised his mistake and said, "In that case, I'm a Buddhist and not a Shintoist after all".

account for the plural religious affiliations of many Japanese as shown by the notoriously ambivalent official statistics derived from figures presented by various religious organisations to the Ministry of Education, the total numbers of Shintoists, Buddhists, Christians and others accounting for 1.7 times the national population in 1972 (Morioka 1975: 4)[3]. For such reasons Japanese religion is better viewed as a totality rather than trying to distinguish Shinto and Buddhism too precisely.

Nevertheless, some general 'division of labour' according to function is applicable to most Buddhist and Shinto rites, notwithstanding the fact that a minority of families who are exclusively Shinto or Buddhist do constitute exceptions to these general distinctions. For the majority of Japanese, Shinto rites are those concerned with rites of passage in the first half of the life-cycle, including weddings and rites for the dedication of children to the protection of a tutelary god, whereas Buddhist rites are more concerned with funerals and memorial rites, which, according to Ooms (1967: 289-291) and Namihira (1976: 358), constitute a parallel or 'mirror image' (Namihira 1976: 367) set of rites to

---

(3) Such figures are based on questionable source data in themselves, since official affiliations may not reflect actual participation, as is well known for some of the 'new religions' who include a whole household as adherents if one member of that household belongs to the religion. Many Buddhist temples have a good idea how many families employ the priest's services for memorial rites, but 'membership' figures for Shinto shrines are highly questionable. It is likely that some shrines (especially those in rural areas) report a membership figure equivalent to the population of the local community, whilst others may give an approximation based on the numbers visiting at New Year. However, the high priest of the largest shrine in Ueno was unable to say how many thousands visited his shrine at New Year and could only point out that their car park, with a capacity for 3,000 cars, was in constant use throughout the New Year period and that thousands of other visitors came by public transport. Since many visit more than one shrine at New Year, such estimates are very unreliable. McFarland (1967: 18) also considers that some of these official statistics are based on 'entirely arbitrary estimates'.

those generally monopolised by Shinto during a person's lifetime[4]. This association is a concomitant of a further linkage whereby Shinto rites tend to emphasise ritual purity whereas Buddhist rites cope with the pollution of death. Furthermore, many Shinto festivals (matsuri) involve the participation of the local community and may symbolise community identity of some kind, whereas Buddhist rites tend to be focussed on particular households and their deceased individuals. The year itself is divided likewise into two principal ritual periods: Shinto rites at New Year and Buddhist rites at Bon, which Yanagita (1970) argues were originally a structural parallel to New Year and occurred exactly six months later[5] by the traditional calendar but with the adoption of the Gregorian calendar now falls in mid August instead of the seventh month.

The concern in the present chapter is with these Buddhist rites for the departed, although some reference will be made also to parallel Shinto rites for the dead. Buddhism in Japan has become fused with the ancestral cult to such a degree that the duties of Buddhist priests are

---

(4) Ooms therefore views the Japanese religious rites as representing a kind of binary life-cycle in which the first half is dominated by Shinto rites and the second half, from death onwards, is dominated by Buddhist rites; the cycle is repeated if one incorporates ideas of reincarnation into the model.

(5) In the year, as in the life/death cycle, a Shinto phase precedes a Buddhist phase. Similarly, in the 'group model' of Japanese society advocated by Nakane (1970), the group or community is accorded precedence over the individual, paralleling the priority given to Shinto (emphasising community) over Buddhism and individualism.

largely taken up with performing such rites rather than with meditation or preaching. For example, an apparently fairly typical Nishiyama priest[6] of the Jōdo (Pure Land) sect of Buddhism gets up sometime between 6.00 a.m. and 7.00 a.m. each day, recites sutras alone in front of the statues in the temple for about 10 to 15 minutes, cleans the interior of the temple for about 10 to 20 minutes and then goes to have breakfast with his wife and children[7]. At about 9.00 a.m. or 10.00 a.m. he leaves to go to the home of a local family for one of their memorial rites, sometimes travelling to more distant parts of the city to visit families belonging to his temple who have moved elsewhere. Each rite takes about 30 to 40 minutes on average, and even if he stops to talk with the family afterwards over a cup of tea - generally about current events of interest rather than religious topics - he never stays more than an hour at most. Each day he visits an average of 2 or 3 homes, or 70 to 75 per month, receiving a fee of about 3,000 yen for each visit. His 'bonus' comes in the form of 4 or 5 funeral services each year, for each of which he receives a fee of 100,000 yen on average. The rest of his time is spent with his family, talking with friends, watching television or participating in other recreational activities. His religion does not forbid marriage, drinking

---

(6) His temple had been founded 400 years previously (after one of the battles in the Middle Ages) in order to care for the souls of the war dead, but had been rebuilt recently so appeared modern and prosperous. The priest may be relatively prosperous, as indicated by his recent foreign holidays to Germany, Hawaii and Australia, but his life style is apparently very similar to that of another local priest whose brother has a home in Aoyama and also to that of the priest in Hokkaido whose way of life is described by Pensrinukun (1984).

(7) This account is based on the priest's own description of his daily routine.

alcohol or smoking, all of which he does, and his household furnishings resemble those of most families in Sakurano or Aoyama.[8] He rarely gives a public sermon, because the occasions on which these might be presented are relatively rare, limited to special festivals at the temple, which accounts for why relatively few of Dore's sample (1958: 345), and hardly any of those interviewed in Ueno[9], had ever heard a formal Buddhist sermon. Religious teaching in Japan tends to be transmitted more through the family than through the clergy (cf. Benedict 1946: 271)[10], and in the family tends to be concerned more with practice than with doctrine[11]. In particular, the instruction about practice is focussed

---

(8) There are 'meditating monks' but these seem to be a minority, and none of them were interviewed in such detail about their life styles. Four such monks from Nanzenji (a Buddhist temple) in Kyoto were observed walking through an affluent area of Kyoto at 9.30 a.m. one August morning calling out in their characteristic style to ask for alms. One of them was asked how long they do this for and how much they collect; at first he refused to answer (by saying he could not speak English) but when the anthropologist persisted (in Japanese) he replied that they do it for about 2 hours (probably until the day becomes too hot) and collect about 10,000 yen between the four of them. They do it "when we have some free time", which on further questioning turned out to be 5 times per week, systematically covering each street of a wide area of Kyoto on their predetermined routes.

(9) The few exceptions are mainly Sōka Gakkai adherents.

(10) Some informal teaching may be communicated through friends, most commonly about matters such as fortune-telling, while more formal instruction on correct etiquette at funerals and weddings, or on various types of divination, is obtained through books (which often have a wide circulation). Many of the 'new religions' provide more formal instruction on doctrine through courses of lectures, discussion groups or publications (cf. Davis 1980: 30ff; Dale 1975; White 1970, ch. 5).

(11) This is more so in the case of Shinto rites, since there is no corpus of scriptures in Shinto, although mythological narratives such as those in the 'Kojiki' and 'Nihon Shoki' (texts dating from the 8th century A.D.) are a substitute for scriptures to some extent.
A detailed account of the daily life of a Shinto priest was not obtained from either of the two interviewed, largely because their work is less 'regular' than that of the Buddhist priest interviewed: Shinto priests are occupied with major festival occasions at fixed times in the year, and their other ritual functions mostly consist of rites for weddings, the dedication of children (hatsu-miyamairi) and the appeasement of local gods when a new building is erected (jichinsai). Many are also consulted as experts in fortune-telling, and some priests (both Shinto and Buddhist) also have part-time work of a non-religious nature,

Praying before a Butsudan.

The Suehara family's zushi.

on the observance of rites at household altars and ancestral graves. Household altars consist of two principal types - the Shinto god-shelf (Kamidana) and the Buddhist ancestral altar (Butsudan), of which the latter is more overtly connected with ancestral rites.

Part A: Practice

Butsudan rites

The Butsudan in urban areas often takes the form of a standing cabinet with double doors which are opened whenever rites are performed. Sometimes it appears from the outside to be merely a cupboard set into a wall, whereas in rural areas a large Butsudan can occupy a large proportion of the space in a room specially set aside for such ritual activity (see accompanying photographs). However, most urban residents, especially those living in apartment blocks, do not have the room to keep such a large Butsudan: one man living in such a flat in Sakurano had constructed his own very small Busudan which was kept on a shelf and tended by his wife, but most Butsudans are bought from specialist shops, some of the cheaper range costing 250,000 to 300,000 yen, or at least £800.

Inside the Butsudan memorial tablets (ihai) are stored, each inscribed with the posthumous name of a deceased ancestor. The Butsudan itself is often of a dark and highly polished wood, while the ihai might

---

(11) (continued)
usually as a teacher of some kind: often they teach calligraphy or other traditional arts, but the Ueno Jingū, the largest shrine in the city, has in its precincts a school for watch and clock technicians, with about 30 pupils. The priests at this shrine receive an income from their religious duties which, after tax, comes to between 187,000 and 241,000 yen for an average month (March 1982) while the female students who act as helpers at the shrine (miko-san), no longer having any Shamanistic functions as they did 1,000 years ago - cf. Blacker, (1975, ch. 6), receive on average about 71,000 to 73,000 yen per month for their part-time work (arubaito).

be simple wooden tablets or else of wood lacquered in black and trimmed with gold. Many Butsudans also contain statues or paintings of Buddhist divinities, offering dishes, a gong or bell to alert the ancestors of one's presence, and sometimes photographs of the deceased relatives. Either with the offering dishes or in a drawer underneath the Butsudan may be kept a rosary and a 'book of the past' (kakochō) containing a record of the dates of death of various family members, usually but not exclusively those to whom (or for whom) the rites are performed[12]. Sometimes important family documents are kept in this drawer too, symbolically protected by the ancestors.

Offerings at the Butsudan commonly consist of some permutation of fruit, cooked rice, incense, flowers, water or tea. Buddhist vegetarian principles theoretically prohibit the offering of meat at the Butsudan, but occasionally fish or fowl might be offered (cf. also Smith 1974: 91) or foods such as chocolate biscuits or sweets of which the ancestor was particularly fond. The details vary considerably between families, as illustrated by a few examples:

Mr. Tanaka, a 52 year old shataku resident, offers rice and tea at New Year and at the Bon festival in August, and suitable fruit at the equinoxes (Higan), but no other offerings throughout the year.

Mrs. Minami, a 46 year old Aoyama resident, offers daily a portion of the first rice to be cooked that day, changes the flowers every few days, gives the first fruits (hatsumono) of each kind of fruit or

(12) For example, the death date of a deceased sister who had married into another household might be recorded in the Kakochō of her natal house but the responsibility for her memorial rites rests not with her natal family but with the household into which she married.

vegetable as they come into season each year, and special gifts of favourite foods on the anniversaries of each ancestor's death.

Her neighbour, Mrs. Kawasaki, aged 33, offers fruit, rice cakes (mochi) and bean-jam buns (manju) on the 16th of each month (the date when her father-in-law died) and also at Bon, Higan and New Year.

Another Aoyama lady, 51-year old Mrs. Endo whose husband died 3 years previously, puts out special sweets that he liked on the 26th of each month (his death date), in addition to flowers from her garden, fruit and incense, and calls in a Buddhist priest to recite sutras for 15 to 20 minutes. On all other days she puts out tea in the morning and at New Year rice-cakes too.

A widow or widower normally looks after the family's Butsudan but on her or his death the eldest son (chōnan) traditionally assumes responsibility for the Butsudan and grave rites. While his elderly parents (or parent) are still alive, he has the responsibility for looking after them in their old age, often involving co-residence. The traditional priviledge or right associated with this responsibility was inheritance of the 'lion's share' of the family property, often all of it (Beardsley, Hall and Ward 1959: 236-240; Fukutake 1967: 42; T.C. Smith 1959: 45-6; Nakane 1967: 6-9), and this same principle of primogeniture remains strong nowadays as well (Matsumoto 1962: 66-68). Sometimes the other siblings formally sign away the rights to equal inheritance which the present Civil Code has granted them since 1948 (cf. Dore 1958: 119, 131; 1959: 264-5), so that the chōnan still inherits all or almost all of the property. In other cases the younger siblings might receive some monetary compensation in exchange for allowing the chōnan to inherit the parents' house. For example, one Aoyama family reported that the husband's

eldest brother legally owned the parental home in Nagano prefecture but it was unoccupied and all the siblings had a right of usufract as a holiday home. In another case the youngest son among 10 siblings inherited the property because he was deemed the "most suitable", while in other cases married sisters were excluded from the partition of the property on the grounds that they now belonged to another 'house' (ie), that of their husbands.

Many of those interviewed denied that their parents owned any property of value, or else used this as an excuse to avoid divulging such information. This denial was generally more valid for some families who had lost fields through the post-war changes in land ownership (cf. Dore 1959: 174-180, 367-371 etc.), for those whose property had suffered considerable damage during the war and for those whose ancestral property had been divided among many siblings. Such families were often those whose present members are aged 45 or over, born before the war, whereas those born after the war are normally members of much smaller families among whom property is more concentrated among fewer siblings. Although most families say that the scarcity of living space imposes a need to restrict family size to (generally) two or three children[13], this limitation may

(13) Those who have an unwanted pregnancy after the first two or three children usually resort to abortion rather than letting the child be born. Margaret Lock (personal communication) has found that the great majority of older women in her recent survey had undergone an abortion, and often attributed their problems with the menopause to this experience. The guilt feelings remaining from this may sometimes impel the women to attend masses for such children (mizuko kuyō), (Brooks 1981; Ohnuki-Tierney 1984: 78-80), bringing along offerings such as teddy bears and childrens' toys. At one such mass attended by the anthropologist only 2 out of 30 or more women present were teenagers (one of whom was accompanied by her boyfriend) and the overwhelming majority were women in their forties or fifties, a few perhaps in their later thirties. One such woman afterwards said that she had wanted to keep the child but her husband had forced her to have the abortion 3 years previously, and she had been prompted to attend this mass by seeing advertisements for it.

be seen also as a response to the changed inheritance laws, so that what family property there is remains more intact. The chōnan still tends to inherit a large share of the property, especially if he has no brothers, and in return he continues to assume responsibility in most families for the ancestral cult. When there are two or more sons in a family, the chōnan almost invariably inherits the Butsudan, except in cases where the chōnan's work or other circumstances have taken him away from the parental home area and ancestral graves but the younger brother has remained.

This Butsudan inheritance practice is the most conspicuous surviving feature of the traditional division between 'main' and 'branch' lineages. In theory the 'main' family (honke) consists of a lineage of eldest sons of eldest sons, while younger sons leave the parental home and form branch families (bunke). When the founder of a bunke dies, his eldest son buys a Butsudan and initiates ancestral rites for his father (and mother), the founding generation of that lineage and not for earlier generations, whereas succeeding sons in a honke line inherit the family Butsudan and perform rites for all the ancestors whose ihai are in that Butsudan. The same principles are repeated for each generation in both honke and bunke lineages, with further branch families breaking away from both the original honke and from the earlier bunke lineages which now become honke to these new branch families (cf. Nakane 1967: 91-93; Smith 1974: 90).

In practice, however, some families may have no children, or else daughters and no sons, or no "suitable" sons to continue the line. In such cases an adopted son, or 'adopted son-in-law' (yōshi), often a younger, non-inheriting son who marries one of the daughters, takes on the family's surname and all the rights and responsibilities of the

chōnan (cf. Nakane 1967: 5, 152; Fukutake 1967: 42; Beardsley, Hall and Ward 1959: 219-220, 237-240). Among those interviewed in Ueno, two men were yōshis, two others were the sons of yōshis, and one man was a 'de facto' yōshi even though he had not adopted another surname. This is Mr. Kaneda, whose genealogy is as follows:

Genealogy of the Kaneda family

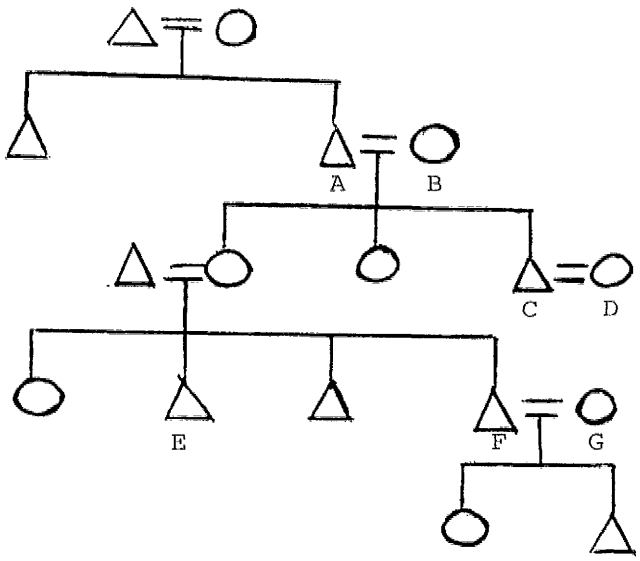

F = Informant, Mr. Kaneda (aged 35).

Mr. Kaneda (F) is not an adopted son (yōshi) for his maternal uncle, C, but inherited from C, who died childless, several rice fields and a small mountain about 20 miles from Ueno City, the sale of which enabled him to buy his present house. Otherwise it would have been impossible for him to live in Aoyama or to borrow enough money to buy such a house on the basis of his salary (about 175,000 yen per month net.) as a conductor for the national railways. F's eldest brother, E, has responsibility for the Kaneda family's ancestral rites but because F has been chosen as heir for his uncle's property he feels a responsibility to maintain the Butsudan worship. However, his irregular shifts mean that he is sometimes unable to pray daily at the Butsudan, as he

feels he ought, so his wife, G, does it on his behalf. Each evening she recites the phrase "Namu Amida Butsu" ("Glory to Amida Buddha") for one or two minutes and offers fresh water daily and rice if they cook it that day. Most days she burns incense and candles and when necessary she changes withering flowers for fresh ones. On the 29th day of the month (C's death day) she offers sweets at the Butsudan and similar offerings at the graves of A, B and C (near where the family land used to be), which F and G visit together with their two young children. They do not know the death dates of A and B so do not make any special offerings to them.

Mr. Kaneda is not a formal yōshi but has inherited property and responsibility for the ancestral cult from his uncle as if he were a yōshi. A similar case involving a formal adoption as yōshi is that of Mr. Hamano, a 38-year old shataku resident, who was adopted 10 years ago (2 years after marriage) by his uncle because the latter, 15 years his senior, had no children. Their genealogy is as follows:

Genealogy of the Hamano family

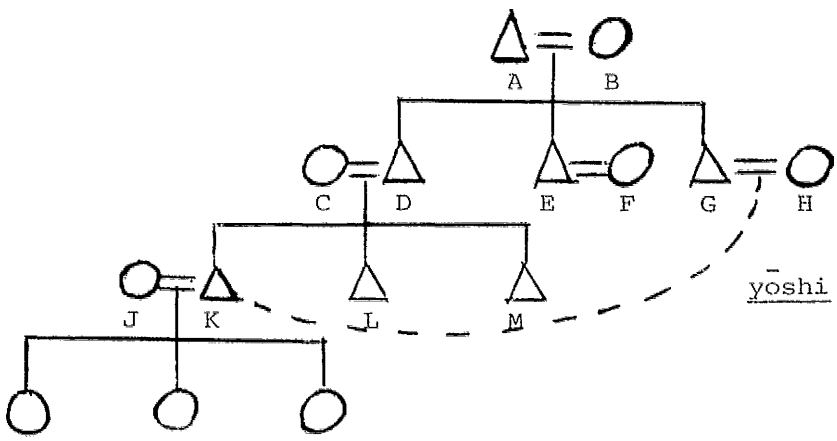

D, the eldest son of A and B, married the daughter of a wealthy factory owner (who had 3 sons and did not adopt D as a yōshi) and joined

his father-in-law's business. After many arguments between D's wife, C, and her mother-in-law, B, D moved away from the home area and maintained very little contact with his natal family until after A and B had died. Meanwhile his younger brother, E, had become a yōshi to another family who had 4 daughters and no sons, adopting his wife's surname of Hiramoto. In these circumstances the third son, G, a medical doctor who had become the favourite son of A and B, became heir to the family estate outside Osaka. The Hamano family are descendents of a distinguished family of the Edo period (1603 - 1868) who were the principal retainers of a feudal lord (daimyō) in the area; the Hamano estates were subsequently let to a factory from which the Hamanos receive a substantial income as rents. Since G has no children of his own but desires to preserve the ancestral lands intact rather than entering into the complications of trying to allot shares in the property, he adopted his nephew K as heir. This choice was partly governed by personal preference on the part of G but also by practical considerations that L is now living in distant Kyushu and would become an absentee landlord if he were to inherit the property, while M is the favourite son of C and D so will inherit most, if not all, of their property, as well as responsibility for their memorial rites. A further strategy involved was that adopting one of D's sons as yōshi has helped to restore relationships between D and his natal family after the deaths of C and B. At the time of his adoption it could not have been foreseen that K and J would have only daughters and no son, so it is likely that in the future one of their daughters will be encouraged to marry a man willing to become a yōshi, with the inheritance of the family house and lands making the prospect materially inviting. K and J live in the Nissei shataku at present while G and H live at the family home and are able to look after themselves. The religious motivations behind the adoption procedure should

not be overlooked either, in that G and H want to be remembered after they die and want the rites at the four family altars[14] to be continued: K and J are prepared to take on this responsibility when the time comes.

The third yōshi interviewed is a 52 year old man living with his wife and two adult sons in one of the 'A' type shataku apartments. He does not have a formal Butsudan but instead keeps the ihai of his real and adoptive fathers in a cupboard along with an assortment of other paraphernalia such as books, pens, correspondence, binoculars and his camera, some of which fall out when he opens the cupboard to find the ihai. Four times a year he sets up the ihai and makes offerings to them as described above (re. Mr. Tanaka). From his adoptive father who died 20 years ago Mr. Tanaka says he received virtually nothing as inheritance, as his adoptive father "had no property to pass on or divide" and from his real father he also received nothing because by common agreement among the 10 siblings all the inheritance went to the youngest child (sueko). Any financial gains expected by Mr. Tanaka through his being adopted into a smaller family were in fact not realised, whereas the material gains for the Kanedas and Hamanos are quite substantial.

Other individual family circumstances can result in a younger son taking over the heirship from a chōnan, as illustrated by the Kitamura family of Aoyama:

---

(14) They not only have a Butsudan and Kamidana but also make offerings to a statue of the kitchen god, Kōjin, and to a statue of Kōbō Daishi, the popular name for Kūkai (774-835 A.D.) who founded the Shingon sect of Buddhism (cf. Anesaki 1963: 123-133; Hakeda 1983: 304).

Genealogy of the Kitamura family

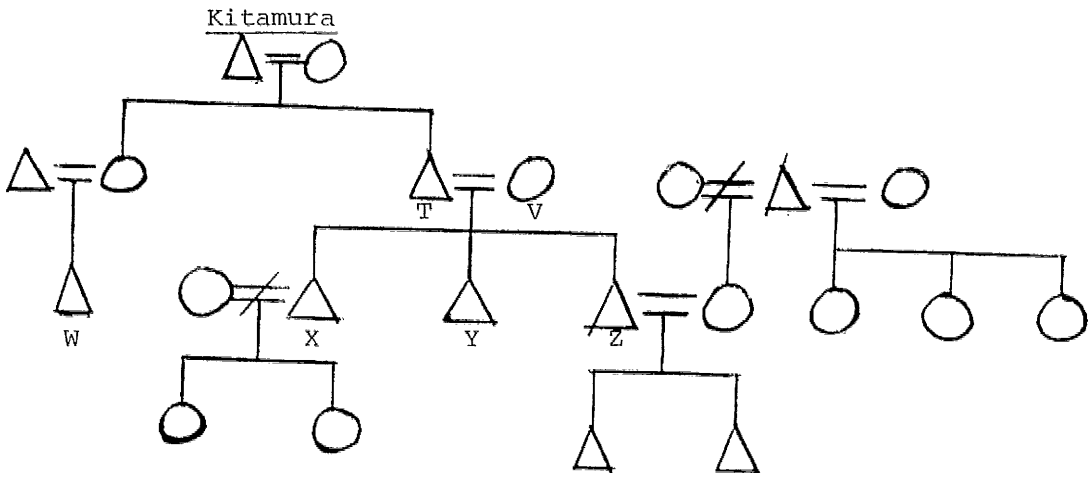

(Z is the Mr. Kitamura of Aoyama-chō in Ueno City).

Among the three Kitamura brothers, X, Y and Z, the eldest son (X) became addicted to gambling and lost large sums of money. As his debts began to pile up he was planning to sell his home (which was the collateral for his 'salary loan') in order to pay off his debts but was prevented from doing so by others in the family. They helped him to pay off the loan and his younger brother, Y, gave X a job in his restaurant in Kyushu[15]. By that time X and his wife had divorced and his wife had taken their two children to live with her parents in Tottori prefecture[16]. Since Y is well established financially, owning a kimono manufacturing firm and a snack bar in addition to the restaurant, his brother Z took over the family business (run by T) which manufactures gold and silver thread for the sashes (obi) of kimonos, an enterprise

(15) Apparently he feels resentment that he has to work for his younger brother and considers that he is not paid sufficiently well for what he does.

(16) Her parents reportedly feel ashamed that their daughter's marriage ended in divorce, but they also accept the responsibility to provide a home now for her and her children.

located in a village outside Ueno. T and V live there and care for the family Butsudan, for which Z and his wife expect to inherit responsibility. Through this series of family events heirship has passed from the first to the third son, both for the family business and for the Butsudan.

One final example illustrates the complexities in inheritance patterns imposed by demography. The family history is that of Mrs. Tsuchida of Sakurano (W in the genealogy):

Genealogy of the Tsuchida family

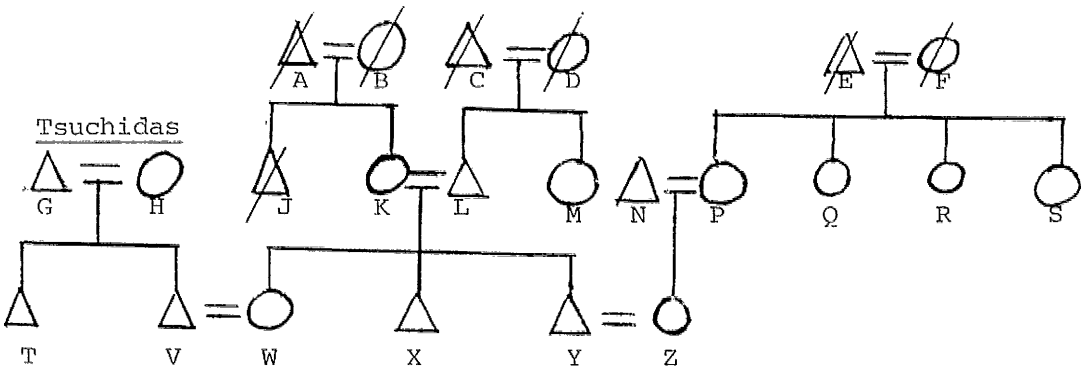

A and B had a son, J, who would have inherited the family's Butsudan (and property) but was killed in the war and left behind no children. His sister, K, had already married L, a chōnan who succeeded to the property and Butsudan of C and D. Since no-one else could look after the Butsudan containing J's ihai and those of A and B when they died, K took it over and continues to pray and make offerings before it. However, she keeps it separately from the Butsudan containing the ihai of C and D, and the two sets of ihai are not merged as has happened in some such cases reported by Smith (1974: 209). It is expected therefore that their eldest son, X, will inherit only the Butsudan containing the ihai of C and D, his paternal kin, in which case there is a dilemma concerning which child should continue the rites for A, B and J.

The initial candidate for the task is Y, the second son of K and L, but this is unlikely in the light of the family circumstances of his wife, Z. Her grandparents, E and F, were descendants of a family of feudal lords in the Edo period and were proud of their family surname which they wanted to preserve. Having four daughters and no sons, they adopted N as a yōshi and husband of their eldest daughter. However, N and P had only one child, a daughter, and so it is expected that if Y and Z have a son then Y will also become a yōshi and adopt the surname of his wife's family as well as taking on the responsibility for their Butsudan(17).

This only leaves W, the elder sister of X and Y, to inherit the Butsudan of A's family. Her husband, V, is a second son with no responsibilities for his own family's ancestral cult (which will be assumed by T), so this increases the likelihood that V and W will eventually assume responsibility for the Butsudan at present cared for by K.

The specific family circumstances of each household in Sakurano and Aoyama could not be obtained in such depth, but the overall pattern which emerges from the questionnaire is that the chōnan normally inherits or expects to inherit responsibility for the ancestral cult unless specific circumstances dictate otherwise. Since grave rites are also regarded as a responsibility of the heir in particular, a chōnan living a long way from his ancestral graves may leave the heirship to his younger brother. This is to some extent indicated by the areas of origin of the 8 chōnans

(17) If they do not have a son, then it is likely that N and P will adopt one of the children of Q, R or S, or one of their husbands, as yōshi if they have a male child already. The informant did not know the genealogical details about the children of Q, R and S.

in Sakurano who replied 'Don't know' to a question on whether or not they expect to assume responsibility for a Butsudan in the future, or else left the question blank. All 8 came from distant parts of Japan: four from Kyushu, one from Hokkaido, and one each from northern Honshu, Western Honshu and the Tokyo area[18]. A further 11 chōnans in Sakurano were definite that they would not inherit responsibility for a Butsudan, of whom 9 are from distant parts of Japan and the remaining 2 from Osaka, one of whom is 26 years old with parents who are still alive and who has perhaps not yet considered the issue. Of the remaining 77 chōnans, 10 already have a Butsudan, 64 expect to succeed to the guardianship of one in the future and 3 are Christians[19]. Therefore 77% (74 out of 96) of chōnans in Sakurano either possess or expect to possess a Butsudan and most of the remainder have circumstances in which proper maintenance of the ancestral cult would be difficult.

A very similar picture emerges in Aoyama. Here 30 of the 77 chōnans already possess a Butsudan, 34 others expect to inherit the responsibility for one in the future, 3 are Christians, another is married to a Christian wife who refuses to participate in the Butsudan cult, and one from the southern extremity of Kyushu does not know whether or not he will succeed to the guardianship of a Butsudan in the future. The remaining 8 are still unaccounted for, but it should be noted that one of these is a 25-year old schoolteacher living with his parents who has

---

(18) Nevertheless the one from Tokyo visits his ancestral graves at the equinoxes (Higan) and at the Bon festival in the summer, and two of those from Kyushu also perform grave rites at either Higan on Bon.

(19) One of these turned over two pages of his questionnaire together so did not call himself a Christian on the questionnaire but turned out to be a Roman Catholic when interviewed. There is therefore a slight discrepancy between these figures and those on the computer tape at the National Museum of Ethnology.

not yet had to consider the question seriously, 3 others perform grave rites at Higan and Bon so do participate in the ancestral cult to some degree, and the remaining 4 all possess Shinto god-shelves. (It will be shown in the following section how Kamidanas can sometimes substitute for Butsudans).

Conversely, there are 4 younger sons in Sakurano and 17 in Aoyama who possess a Butsudan, plus 18 in Sakurano and 26 in Aoyama who expect to become guardians of one in the future. These figures indicate that in virtually all families (except Christians and what Dore (1958: 313) calls 'out and out' Shintoists) someone, usually the chōnan, is expected to assume responsibility for the ancestral cult[20]. So long as there is someone to continue the cult, preferably a chōnan, the present incumbents of the post of 'guardian'[21] of the Butsudan feel they have discharged their obligations to the ancestors and can rest peacefully in their graves knowing their own souls will have rites performed on their behalf.

Those who do perform the rites are mainly women. Among the 18 different variants of persons responsible for the rites reported by 152 people possessing Butsudans in both Sakurano and Aoyama, the person (or persons) responsible for the Butsudan is the wife alone in 29% of the cases, the husband alone in 5% of cases, husband and wife together in 21% of cases, and someone else (or some other combination sometimes

---

(20) Dore (1958: 313-314) reported a similar finding in post-war Tokyo: 80% of those households which could have been expected to have a Butsudan did have one, while the remaining 20% (24 families) could be accounted for in a variety of ways.

(21) 'Guardian' is here used in order to indicate an idea of temporary discharging of a duty before passing on the rights and responsibilities to the following generation, although in Japanese the term 'successor' (keishōsha) would normally be used.

including the wife or husband) in the remaining 55% of cases. In 74 cases (49%) women only are responsible, including 24 cases of the husband's mother having sole responsibility, whereas men only are responsible in 12 cases (8% of the sample). Very similar patterns were also found by Smith (1974: 118-119). The above-mentioned 'someone else' is usually an elderly parent (or parents) living with an Aoyama family[22] who maintain rites for their parents or for a deceased spouse. Since many of these are widows rather than widowers, there is a tendency for the cult to be practised more by women among the elder generation, but this is also a continuation of a tendency found among the younger generations. Largely this is on account of the greater amount of time available to the women, as compared with the time expended by the men at work and while commuting (cf. chapter 2), but other factors include the presence of the women around the home for most of the day and their responsibility for cooking the meals, so that putting an offering of rice on the Butsudan before serving out portions to the rest of the family can become a regular habit. Similarly, the changing of older flowers for fresh ones on the Butsudan is not unlike their other domestic chores for keeping the home generally clean and tidy.

Cases in which a man alone is responsible for the upkeep of a domestic Butsudan are relatively rare. One such man is Mr Maruyama in

---

(22) In the one 3-generational household in Sakurano the widowed grandmother is a Christian and does not perform any Butsudan rites. Therefore all cases of an older relative being responsible for the rites are found among Aoyama residents. This also produces a higher proportion of Sakurano husbands having responsibility (48% vs. 30% of Aoyama husbands), and a similarly higher proportion of Sakurano wives (71% vs. 56%).

Sakurano, whose first wife (by a 'love marriage', ren'ai) was killed in a motor accident[23]. He was left with the care of two young children and married again not long afterwards, this time by a miai 'arranged' marriage. His Butsudan enshrines the ihai of his first wife, and he rather than his present wife takes the responsibility for the rites: as he says he does not have enough time in the mornings to perform the rites he does so each evening after he returns from work (sometimes quite late in the evening), when he normally offers rice cooked for their evening meal, plus fruit and vegetables in season. A few other men take seriously their responsibilities towards the ancestors, but they normally observe the rites in conjunction with their wives. Those who spend the most time chanting or praying before their Butsudans are adherents of the Sōka Gakkai: one such retired man living with his son and daughter-in-law in Aoyama claims (on his questionnaire) to spend 2 hours daily chanting before his Butsudan; a young man in Sakurano claims to spend 20-30 minutes each morning and 35-45 minutes in the evening, but another young Sōka Gakkai man (in Aoyama) tends to chant for only a few minutes each day except at the weekends or when his Sōka Gakkai parents-in-law visit, when he chants for a longer period. His wife chanted for well over an hour most days[24] until her first child was born, after which

(23) When the accident happened, the wife was driving because Mr. Maruyama had felt tired so had asked her to drive for a while. He now feels guilty that his wife had, in effect, died in his place because he thinks he ought to have been driving at the time. One of his principal motivations for performing the Butsudan rites is, he says, an effort to atone for his guilt feelings by performing the rites for her every day.

(24) Her chanting could be heard from where the anthropologist was living, so this timing is based on first-hand knowledge rather than her own claims. Her husband's chanting could also be heard, and seemed to be particularly loud when he knew the anthropologist was at home!

its duration and frequency declined very noticeably; the young wife of the Sakurano Sōka Gakkai man claims she spends about 2 hours daily chanting at their Butsudan, one of her prayers (two years after marriage) being that they would conceive a child[25].

One unusual experience which prompted an increased fervour or devotion to the Butsudan cult on the part of one man was reported by Mr. Kaneda, whose genealogy and circumstances are reported above. Ten days before he was interviewed he had a dream about his maternal uncle (C in the genealogy) whose property he had inherited. Though Mr. Kaneda could not remember his uncle's words to him in the dream, or if there had been any words at all, his strong feelings and thoughts when he awoke were that his uncle, who had died childless, was concerned about the extinction of his line and wanted Mr. Kaneda to do the ancestral rites and pray more fervently. This dream prompted the nephew to make the effort to pray more frequently and fervently for his uncle rather than leaving the rites more for his wife to perform.

The complex of beliefs, half-beliefs, attitudes and emotions involved in cases such as this are almost impossible to isolate systematically, but certainly one influencing factor appears to be the concept of muenbotoke, unattached spirits with no descendants to perform rites for them who are thereby condemned to wander in some kind of a limbo rather than finding a more permanent and settled place in the after life (cf. Ooms 1967: 251-6, 282-4; Smith 1974: 41-50). Such muenbotoke are often in rural areas identified with the 'hungry ghosts'

---

(25) The couple were first interviewed a few months after their marriage, when the wife claimed to pray for 2 hours daily and was not motivated by a desire to have a child. It was only in the second period of fieldwork that their desire for a child and months of disappointment were mentioned.

for whom special foods are laid out during the segaki festival around the time of Bon (cf. Smith 1974: 20, 41, 54, 100), in order to avert their potential maliciousness. Southwold (1973: 170) reports a similar motivation among Buddhists in Sri Lanka for conducting mortuary ceremonies at certain fixed intervals after a person's death, particularly the rite held on the seventh day. In Japan such rites are held most usually on the 7th, 35th and 49th days after a death, but according to Smith (1974: 95-6) only the 49th day ceremony seems to have been imported from continental Buddhism[26]; this is commonly regarded as the end of mourning and the lifting of pollution for closer kin[27].

The funeral rites themselves generally consist of a wake in the evening for relatives and closer friends, during which one or more Buddhist priests recite sutras and the relatives line up to light a candle or incense stick as a symbolic prayer to or for the deceased. The following day is the main funeral rite which a wider circle of friends and acquaintances may attend. As they arrive, dressed in black or at least wearing a symbolic black armband, they go first to a table covered with a white cloth, and often with a white awning above too,

---

(26) If, despite the parallel in Sri Lanka, the Japanese 7th day rite is from indigenous roots it is probably related to the idea that the soul remains in the vicinity of the house for 7 days after death (Smith 1974: 94) but elsewhere it is said that the soul leaves for the grave on the 49th day (Ooms 1967: 232).

(27) Informants differ a little in the degree to which they extend the limits of pollution genealogically, but most commonly it is restricted to the deceased's spouse, parents and children, and to a lesser extent to siblings, grandchildren or grandparents. Friends are usually regarded as no longer polluted or 'contaminated' by the soul (Hashimoto 1962: 39) after they have sprinkled salt over themselves on returning home after a funeral. There are also widespread ideas that some kind of pollution remains on the nuclear family of the deceased (sometimes on other kin too) for up to a year after the death, so that they should not visit a Shinto shrine at the next New Year and if possible should avoid participating in weddings or other auspicious family events which may be associated with Shinto institutions.

which has been specially erected outside the house where the funeral takes place. There they hand in a special type of envelope containing money (often about 5,000 yen) marked on the back with the amount and the name of the donor. These are recorded in a book by members of the deceased's family so that a return gift (not of money but of something like crockery or ornaments for the house) of a value roughly one half that of the monetary gift can be sent afterwards to the donor[28]. All visitors are also given a standard small gift, commonly a hand towel in a small box plus a sachet of salt for the ritual purification when the guests return to their homes.

In the Ueno area the names of those donors (including the local jichikai) who have given a substantial contribution of money before or during the wake are inscribed on large boards erected outside the house, sometimes two or three boards being erected to commemorate particularly generous donors. These remain up until after the funeral, sometimes until the following morning. Through this local custom it is clear to the whole neighbourhood that a funeral has taken place. Afterwards, until the 49th day, the ritual pollution of the home is indicated by the affixing of a sticker with the character 忌 ki or imi, pollution by death, above the door of the house: the 49th day is called the 'lifting of pollution' (ki-age, or, according to Smith (1974: 51, 95), imi-ake).

---

(28) Later, if there is a death in the donor's family, these records can be consulted in order to decide on the appropriate equivalent amount of money to be given to the other family. [Similar types of records for the same purposes are kept of gifts received at the birth of a child].

During the funeral itself[29] most of the visitors remain in the street outside the house while the priests chant sutras for half an hour or more. Those waiting are generally silent, but some men may light cigarettes or exchange occasional quiet comments among themselves. Towards the end of the ceremony the names of some of the principal mourners are announced, who go to burn incense and pray to the deceased. Then the wider group of friends and acquaintances file in to do the same (not in any fixed order except that of their proximity to the entrance of the house), burning a pinch of incense and bowing towards where the priests are chanting next to the covered coffin, most participants bowing their heads and putting their hands together in prayer for a few seconds. When asked about an hour or two later what they prayed or felt at that time, one informant replied that she just said "Sayōnara" ("Goodbye") to her friend who had died and another informant said he just reflected on what kind of person the deceased had been but did not offer any specific prayers to him. After burning the incense and praying, the mourners return to the street, some of the deceased's relatives offering a gift of a packet of cigarettes to any mourner who wanted them. Shortly after that the priests leave the house and are followed soon afterwards by those bearing the coffin, who put it in a hearse to be taken to the crematorium, after which the ashes are buried in a graveyard. Only the close kin of the deceased are present at this

---

(29) The anthropologist only attended one funeral during the course of the fieldwork and this was outside the fieldwork area itself (because none of his friends in Sakurano or Aoyama died while he was there). However, the general pattern is the same as that observed taking place in other parts of Ueno and is consistent with the reports of Ueno informants. Relatively similar accounts, differing only in local details, are given for rural areas by Beardsley, Hall and Ward (1969: 338-343), Embree (1939: 215-218), Norbeck (1954: 188-194) and Hendry (1981: 209-213).

final disposal of the body while most of the other visitors disperse to their homes.

The family gather together again on the 7th day following the funeral, at which time a priest recites sutras before the Butsudan. Similar observances are held by some families on each subsequent week up to and including the 49th day, but most observe only the 7th, 35th and 49th day rites plus the subsequent rites held on certain anniversaries of the person's death. These rites, called hōjis, again bring together the relatives (generally children, grandchildren and siblings) of the deceased who sit silently while the Buddhist priest chants sutras, but often it is also an occasion for a family reunion over a common meal, especially when the relatives are scattered geographically and rarely meet at other times. The periodic anniversaries of death (nenkis) at which hojis are held are the 1st, 3rd, 7th, 13th, 17th, 23rd, 27th, 33rd and 50th anniversaries of the death, and sometimes the 100th too (cf. Smith 1974: 95).

The hoji rites bring together wider kin at the nenkis, but special offerings or prayers may be made also at other anniversaries of death by the deceased's family who maintain his or her ihai in their Butsudan. This annual deathday (shōtsuki meinichi) would be, for example, on the 24th of May each year for a person who had died on that day, as distinguished from the monthly deathday (maitsuki meinichi) which falls on the 24th of each month. As indicated in some of the examples cited earlier, special offerings may be made, or a priest brought in to recite sutras, on a person's monthly deathday. This seems to be more common for people who have died in the recent past than for those whose deaths were in the more remote past, but some widows or widowers maintain these rites conscientiously for

many years. In addition, many families practise some kind of daily rites, sometimes in the morning, sometimes in the evening, occasionally twice a day, which are not usually so elaborate in their offerings as those on the (monthly or annual) meinichis, while offerings at the hōjis are often more elaborate still. To a large extent, these rites merge into one another: those who observe daily rites automatically perform rites on the other occasions, perhaps with more elaboration, and similarly those who observe the monthly deathday rites automatically perform rites when these fall on the annual deathday or nenkis.

The other occasions on which ancestral rites are commonly performed are New Year, Higan and Bon. Of these, Bon is especially important for ancestral rites, because this is the time when the ancestors are said to return temporarily to this world for a few days before being sent back to the other world. Bon dances (to welcome the ancestors) are held in many areas, and a few days later the souls of the ancestors may be symbolically escorted back to the other world through the lighting of bonfires or the floating of illuminated model boats out to sea or down a river (cf. Smith 1974: 101-3; Hashimoto 1962: 19-20). These practices do not occur in Ueno, but many residents go to Kyoto that evening to watch the lighting of huge bonfires in the shape of Chinese characters upon the hills around the city or the floating of illuminated boats down the river in the suburb of Arashiyama[30].

---

(30) These practices may to some extent account for the retention of Bon at the height of summer in August after the Gregorian calendar was adopted in 1872, whereas New Year and many other rites were shifted forward about a month or so in order to retain the same dating. If Bon had been shifted forward too so that it still fell on the 15th of the seventh month then it would have coincided with the last part of the 'rainy season' in most of southern and central Japan, which would have caused many problems for lighting the bonfires. Therefore Bon still falls at the height of summer but is now celebrated in the middle of the eighth month (August) rather than July.

Bon is also a time for visiting the ancestral graves, often located in rural areas, so that many take advantage of company or school holidays around this time[31] to visit their families' natal homes. The other times for visiting graves are at Higan (the Spring and Autumn equinoxes) and, for some, just before New Year as a part of the general clean-up of the home (and graves) which takes place at that time[32]. Each of these occasions are also times when the ancestors in the Butsudans may be presented with special offerings or prayers, or else may receive some kind of attention from those families who do not perform rites on any more frequent basis.

There are therefore many permutations among the possible occasions for ancestral rites at Butsudans, varying according to frequency between daily rites and occasional rites at nenkis, and varying in specificity between meinichi and nenki rites (which are directed towards a particular known ancestor) and more generalised rites at Bon or Higan which in theory are usually directed towards the collectivity of ancestors in the Butsudan. In practice, however, many informants say that their minds are focussed particularly upon known ancestors when they perform such rites, even if they consider their offerings or prayers to be presented to all the ancestors collectively. Such distinctions only apply when there are several generations of ancestors represented by the ihai in the Butsudan, since the collectivity becomes equivalent to specific known ancestors when there are only a few ihai, or only one as in the case of Mr. Maruyama's Butsudan containing the ihai of his first wife.

---

(31) The 15th of August is also a holiday for commemorating the end of the war, but as it is in the school holidays it is not uncommon for some families to pay visits to relatives at this time and to visit their ancestral graves while there.

(32) Cleaning up of the graves before New Year is only done by those living in close proximity to their family grave sites.

Smith (1974: 106-113) has shown how there are a great variety of permutations in times of Butsudan rites, and to Smith's list may be added 'times of joy' and 'times of distress', two further occasions when prayers of thanks or supplications for help may be offered to the ancestors. Adding these possibilities to those already detailed, and including also the categories 'when one thinks about it' and 'never at all', it was found that out of 144 respondents[33] in Ueno 79 different patterns of Butsudan worship were reported, of which only 25 occurred more than once. Virtually 60% of these 144 respondents perform rites on a daily basis, a percentage which is almost the same for both geograpical areas[34]. A further 11.8% of the sample (17 people) perform monthly rites on the meinichi of known ancestors. In all 103 people, 71.5% of the sample, perform rites at least once a month, mostly daily, but such statistics do not differentiate between the intensity of the man who prays for 2 hours daily and that of the housewife who each day spends a few minutes or less offering brief prayers for the safety of her children as they go to school and for other domestic affairs. A further 36 respondents (25% of the sample) perform rites less frequently than once a month, usually with some combination of seasonal rites (Bon or Higan) with occasional personal rites for individual ancestors (shōtsuki meinichi or nenki rites). However, 5 people reported that they perform rites only at New Year, Higan and Bon, and 3 reported rites only at New Year and Bon. Both of these combinations are included in

---

(33) Since husbands and wives may have different patterns of rites, both spouses' replies have been included. These 144 respondents are those who possess a Butsudan, but some other respondents who perform rites when they visit the home of a parent or on other occasions but who indicated the occasions on which they practise such rites have been excluded from these figures.

(34) i.e. 65% of the Sakurano respondents and 58.9% of those in Aoyama.

the 17 most common patterns found among this sample, the first of these ranking fourth equal in terms of the frequency of individual patterns, which stands in some contrast to Smith's finding (1974: 107) that none of his fourteen most frequent patterns involved only seasonal rites to the exclusion of any others.

The five remaining respondents reported that they never worship at a Butsudan even though there is one in their household, but in each of these families there is someone (an elderly co-residential relative or the respondent's wife) who does perform the rites. One of these five was interviewed, a 31 year old Sakurano man, who is a chōnan and expects to inherit the responsibility for his parents' Butsudan in the future. He says that out of respect for his parents he will recite prayers and give offerings at that Butsudan in the future - but "in form only" - but because his wife is an active member of Reiyūkai, a new religion similar to the Sōka Gakkai (35), he has constructed for her a small Butsudan which they keep in their flat but at which he himself never prays.

These patterns of rites show that the majority of respondents pray or present offerings at their Butsudans very frequently, usually daily or at least once a month, and that someone in each household with a Butsudan performs rites at it. Although the present work is not concerned with the question of secularisation to any great extent, largely because historical data for comparative study is lacking for many aspects of Japanese 'practical' religion, it should be pointed out that these figures on the frequencies of various patterns of rites do not provide any basis for judging whether or not the frequency of such

(35) Both are from the Nichiren sect of Buddhism.

rites has declined or increased over time. One can not assume without evidence that in the past everyone performed the rites on a daily basis and that some housholds have deviated from such an ideal owing to some assumed secularisation process[36]. If rural data is used for comparison on the assumption that secularisation has proceeded faster in urban than rural areas, the data is ambiguous. A sizeable proportion of rural households do not practise daily rites, there being 3 such households out of the 19 studied by Ooms (1967: 240-241 cf. p. 244), in Nagasawa. Two of the five patterns which Smith (1974: 107-111) found only in the village of Sone (and not at all in urban areas) involve no daily rites. Conversely, Smith found four patterns exclusively in urban areas and another which was almost entirely urban, four of these five patterns including daily observances. These few observations indicate that caution needs to be exercised before assuming that secularisation has been taking place in urban areas: on the contrary, what little evidence there is of time spent performing Butsudan rites shows that adherents of 'new religions' such as the Sōka Gakkai - largely concentrated in urban areas (cf. White 1970: 65-70; Norbeck 1970: 173; Agency for Cultural Affairs 1972: 91-2, 102-3) - spend considerably more time chanting at their Butsudans[37] than do most of their neighbours who spend at most just a few minutes each day. (cf. also Morioka 1968: 27).

---

(36) There is evidence to show that daily morning rites may have declined through the change from traditional breakfasts including rice to a more Western one of toast (cf. Smith 1974: 111) but many households still eat rice in the evenings and present it to the ancestors then, continuing the practice of some kind of daily rite.

(37) This statement is based on the reports of some Sōka Gakkai adherents in Ueno about their own times of prayer and chanting, which are confirmed by the anthropologist's own experience of hearing one of them, but another Sōka Gakkai woman admitted with embarrassment that she spends just "a few minutes" daily at her Butsudan, though even this is no less than the time expended each day by most non-Sōka Gakkai people with a Butsudan.

A father teaching his son to perform grave rites.

A Kamidana high up on the wall of an Aoyama home.

Kamidana rites

The Shinto god-shelf, Kamidana, often takes the form of a ledge or small shelf set fairly high up on one wall of a room, the choice of preferred room varying to some extent according to different regions of Japan (Nakamaki 1983: 72-4). Commonly among Ueno residents it is in the kitchen or living room, though one household without a formal Kamidana regards their image of Kōjin, a kitchen god, as the equivalent of a Kamidana[38]. Most Kamidanas contain at least one, sometimes several amulets or talismans (fuda) from a variety of Shinto shrines. There are many types of fuda but most commonly they consist of inscribed pieces of paper, sometimes wrapped around a wooden plaque, or else simply an inscribed wooden plaque by itself. The inscription contains the name of the shrine where the fuda was purchased and might also claim to confer some practical benefit such as safety from fire or safety in the home. Certain shrines are famous for particular specialities, one local example in the Nishiyama area of Ueno being the Iwadani shrine (a few miles from Aoyama and Sakurano) which specialises in charms against 'calamitous years' (yakudoshi)[39]. Other types of charms which might be kept in a Kamidana include mamori amulets for safety and chimaki charms which are hurled from the floats pulled along in the local Ueno festival and considered to bring good luck if one manages to catch one[40].

---

(38) On the questionnaire this family, the Ikedas, claimed to have a Kamidana but when interviewed they turned out to have been referring to their image of Kōjin, before which they place daily offerings.

(39) See chapter 4.

(40) See also Bownas (1963: 76-89) for a description of the Gion festival in Kyoto and the use of chimaki charms there. The Ueno festival is in many respects a smaller-scale version of the Gion matsuri in Kyoto.

They consist of a bundle of leaves carefully wrapped to resemble a kind of 'hand' of five tubular leaves joined at the base, those thrown from the floats being hollow inside[41].

The range of items offered to the gods (kami) at the Kamidana is not dissimilar to those offered at Butsudans, but with a few notable differences. Some of these are listed by Smith (1974: 91). Among Ueno informants many patterns correspond to Smith's list, but there are also differences such as the offering of flowers and rice (the latter only at New Year) before Kamidanas as well as Butsudans; some items are offered only at one and not the other, however, as indicated by table 3.1:

Table 3.1 Offerings peculiar to the Kamidana or Butsudan among Ueno informants

Kamidana	Butsudan
Salt	Bean-jam buns (manju)
Seaweed	Biscuits or Sweets (favourite foods of a particular ancestor)
Sakaki branches	Shikimi branches
New Year foods (o-sechiryōri)	
Spiced sake (rice-wine)	
Cuttlefish	

Sakaki is a tree sacred to Shinto and many informants mentioned branches of this tree among their list of offerings, but only one man (a Sōka Gakkai adherent) mentioned a Buddhist equivalent in the shikimi tree

(41) Some shops specialising in traditional sweets in Kyoto sell chimakis containing a sweet paste in each 'finger', these chimakis lacking any overt religious significance. Similarly, chimakis can be bought from shops in central Ueno at the time of the Ueno festival but those interviewed were generally of the attitude that such purchased chimakis were not as efficacious in their 'spiritual' luck-bringing properties as those chimakis thrown from the floats and caught.

saying it is "symbolic of eternity and the unchangeability of Ultimate Being", since (like sakaki) it is an evergreen[42]. Salt, symbolic of purification, was reported only as a Kamidana offering, as were cuttlefish and seaweed (both of which were mentioned by only one informant). Since Shinto rites are particularly prominent at New Year it is not surprising that New Year foods (o-sechiryōri) and spiced sake drunk at New Year, are mentioned only in relation to Kamidana rites; in one family almost the only offerings made at the Kamidana throughout the year consist of a New Year's dish of rice cakes and vegetables (zōni), next to which candles are lit at New Year.

As with the Butsudan cult, so also with the Kamidana there is a wide variation among families in both the items offered and the occasions for Kamidana worship. The principal differences lie in the paucity of Kamidana rites on the death days of particular ancestors, and in the practice among a few families of making offerings to the kami only on the first and fifteenth days of each month, a practice mentioned also by Ooms (1967: 241). Three households reported such practices and two others which perform daily rites put out special offerings (such as rice wine, sake, instead of water) on these days[43]. One informant stated that he occasionally makes his offerings on the 16th instead of the 15th of the month, but essentially these days mark the beginning and middle of the month and by the older lunar calendar would have occurred

---

(42) Sakaki has no English equivalent, so Kenkyusha's dictionary (1954: 1413) gives its Latin name as Cleyera ochnacea. Shikimi is an aniseed tree, Illicium religiosum.

(43) Of these five households, only two reported this pattern on the questionnaire by writing it in where an item for 'other occasions' was included on the form. The other three informants mentioned their rites on the 1st and 15th of the month during the course of their interviews. (No-one filled in the 'other' category regarding Butsudan rites).

regularly every 14 days[44]. In so far as the Kamidana cult is normally directed to the gods (kami) rather than to ancestors who died on a definite known date, the highlighting of the first and fifteenth days of the month is structurally equivalent to the special prayers and offerings made to ancestors once a month on their death dates (meinichi). One woman who offers rice at her Kamidana on the 1st and 15th of the month, but only water every other day, expressed the opinion that singling out these days for special offerings and prayers is "for the renewal of one's spirit" by marking a fresh beginning to each half of the month.

Among the 152 people possessing a Kamidana who reported the pattern of their rites, 27 worship at New Year only, and 10 at New Year and every morning (singling out New Year as a time when they presumably make extra offerings or special prayers); daily Kamidana rites are performed by 60 people, or 39.5% of the sample[45]. In all, 21 patterns occurred more than once, constituting 73% of all the 152 cases, while 41 patterns occurred only once each. Since Smith (1974) does not examine patterns of Kamidana worship, focussing only on Butsudan patterns,

---

(44) The rites would then coincide with the New and Full Moons, and may not have been unconnected with moon worship (which a few informants sometimes practise) or the less overtly religious practice of 'moon viewing' in which many Japanese participate (cf. Inokuchi 1983a).

(45) Dore (1958: 306) reports that 'less than half' of those with Kamidanas in Shitayama-chō, Tokyo, performed rites every day but there is no evidence to show that daily rites were more prevalent in earlier periods. On the contrary, the marking out of the 1st and 15th days of the month for special rites is likely to have been well established before the adoption of the Gregorian calendar (cf. footnote 44). Although a higher percentage of daily Butsudan rites are practised in Ueno (59.7% of the sample) this does not necessarily mean that Kamidana practices have 'declined' more than Butsudan rites but may simply reflect the stronger attachments felt by many people towards close kin who have died as compared to less personalised or more 'distant' kami.

these main patterns of Kamidana worship are presented in Table 3.2.

In this table, New Year stands out very conspicuously as a time when most informants practise Kamidana rites, 95.4% of the 152 respondents performing rites then (or else every day including New Year)[46]. The New Year period is very strongly associated with Shinto and is normally celebrated by visits to a Shinto shrine. Special New Year decorations are put up above or beside the front doors of many homes, and in chapter 6 it will be shown that this practice is especially prevalent among those who possess a Kamidana. These and other New Year practices[47] are closely associated with Shinto, so it is not surprising that many people practise special rites at their Kamidanas at this time.

What is initially more surprising, however, and in the present context very significant, is that 20 out of the 152 respondents claimed to perform Kamidana rites on the death days of ancestors - i.e. on a meinichi (of either type) or on nenkis. This data does not conform to the conventional stereotype that ancestors are revered at the Butsudan but Shinto gods (kami) at the Kamidana, and indicates that there is some overlap in the functions of Butsudans and Kamidanas in relation to ancestral rites.

---

(46) The four people who report rites every morning and evening and also at New Year are virtually equivalent to the three who report rites each morning and evening. The four who indicated New Year in addition to the daily rites either perform extra rites (such as giving some special offerings) at New Year or else just started at the top of the list by marking New Year and then, missing out Bon and Higan, indicated morning and evening rites. However, others doing the same also indicated 'times of joy' and 'times of distress' as occasions for particular prayers at the Kamidana.

(47) Another New Year custom is the setting up of rice-cakes (mochi) in most homes, which have a particular rounded shape resembling mirrors used in ancient Japan. The symbolism of these 'mirror rice-cakes' (kagami-mochi) is thought to be related to Shinto myths about the sun goddess being enticed out of a cave by seeing her reflection in a mirror (Herbert 1967: 119, 308), the mirror also having symbolic importance as one of the 3 imperial symbols and as the seat or symbol of the deity (shintai) in many Shinto shrines (cf. Holtom 1938: 11; Singer 1973: 25)

Table 3.2

Repeated Patterns of Kamidana Worship

No. of cases	New Year	Obon	Higan	Every Morning	Every Evening	Nenkis	Monthly Meinichi	Annual Meinichi	Times of Distress	Times of Joy	When thought about	Other
2	X	X	X	X	X	X	X	X				
2	X	X	X	X	X				X	X		
3	X	X	X	X								
3	X	X	X									
3	X	X										
4	X			X	X				X	X		
4	X			X	X							
2	X			X						X		
10	X			X								
2	X					X						
4	X						X					

(continued)

Table 3.2 (Continued)

No. of cases	New Year	Obon	Higan	Every Morning	Every Evening	Nenkis	Monthly Meinichi	Annual Meinichi	Times of Distress	Times of Joy	When thought about	Other
6	X								X	X	X	
6	X								X	X		
3	X								X		X	
5	X								X			
9	X										X	
2	X											X
27	X											
3				X	X							
8				X								
3											X	

However, in 10 of these 20 cases the informants also possess a Butsudan and it seems likely that they perform rites at both on the same days; some of them may have filled in the Kamidana section of the form identically without considering the details of their replies too closely. A further 3 informants indicated on their forms that a parent or parents not living in the same household were responsible for the rites, and these respondents seem to be reporting their parents' practice rather than their own. Nevertheless, if their information is accurate[48] this does not explain why their parents perform rites for the ancestors at their Kamidanas[49]. This still leaves six[50] respondents who do not possess Butsudans but who claim to perform rites at the Kamidanas to their ancestors. Their reported patterns of rites are as follows:

Table 3.3 Ancestral rites performed at Kamidanas

No. of cases	New Year	Every evening	Monthly meinichi	Nenkis
1		X		x
3	X		X	
2	X			X

(48) It is likely that some mistakes were made in filling out the questionnaire, a few such cases coming to light in the interviews, but one can assume that overall mistakes in one direction are likely to be cancelled out by mistakes in the opposite direction.

(49) It is not unlikely that the parents also possess Butsudans and therefore perform rites for both the Butsudan and Kamidana on the same day, perhaps with relatively little distinction in practice between the two.

(50) One informant left blank the question about Butsudan ownership but wrote 'Yes" for having a Kamidana. Most likely this meant that there was not a Butsudan in the house, and therefore this makes seven people without Butsudans who perform ancestral rites at a Kamidana. However, owing to the ambiguity of this one case only the other six are included in Table 3.3.

It was possible to interview two families in detail about ancestral rites at their Kamidanas[51]. One of these is Mrs. Yamamoto, a 45-year old resident of one of the Sakurano apartments. From childhood, she says, she had been taught to revere the ancestors, her parents possessing both a Butsudan and a Kamidana. She says that 'Kamisama' ('God') and 'Hotokesama' (Buddha or ancestors, the same term referring to both: cf. Dore 1958: 313, 457 footnote 257) are both the 'very old ancestors' who, together with the more recent ancestors, "are protecting the family so we can pass each day happily". Like most other informants, she does not distinguish between Kamisama, Hotokesama and the ancestors (go-senzosama) but specifically groups them together saying they all have this protective function - but "especially the ancestors". The recent ancestors, she says, "have much more influence, power and relevance", and for this reason she gives "thanks to the ancestors every evening" at her Kamidana. Since her parents are still alive, her most recent ancestors are her grandparents, and on the occasions of their nenki rites (when the family gathers together for a hōji) she also prays specifically to these ancestors at her Kamidana, when she makes special offerings of rice, sake and sakaki branches, these special items being the same as those she offers at New Year. Her feelings when she prays are primarily

(51) This material on ancestral rites at Kamidanas was not noticed until the analysis of the computer data after the first period of fieldwork. In the second fieldwork period an effort was made to interview these families but because of the long time which had elapsed since the original questionnaire these people were less willing to be interviewed and in indirect but clear ways they refused. (Most of the 30 interviewed in the second fieldwork period were in fact those with whom the anthropologist had some kind of prior contact in other contexts). However, one woman who refused did so by saying, in response to the anthropologist's request to interview her about rites at their Kamidana, that her husband is the one who knows more than her about his ancestors - a significant word in this context - but she thought he would be too busy to be interviewed about this. She was unwilling to commit herself or her husband to a specific time when they could be interviewed but it is evident from her words that some kind of ancestral rites are practised at their Kamidana.

of thanksgiving, giving thanks each night to the ancestors for keeping the family safe during the day, but she also includes petitions for safety and health, especially for her husband at work in the factory.

The other family practising ancestral rites at a Kamidana belong to the minority which Dore (1958: 313) calls 'out and out Shintoists'. They originally came from the Miyazaki area of Kyushu, where, they say, there is a local Shinto group who are not Buddhists but perform only Shinto memorial rites. Their genealogy is as follows:

Genealogy of the Yamashita family

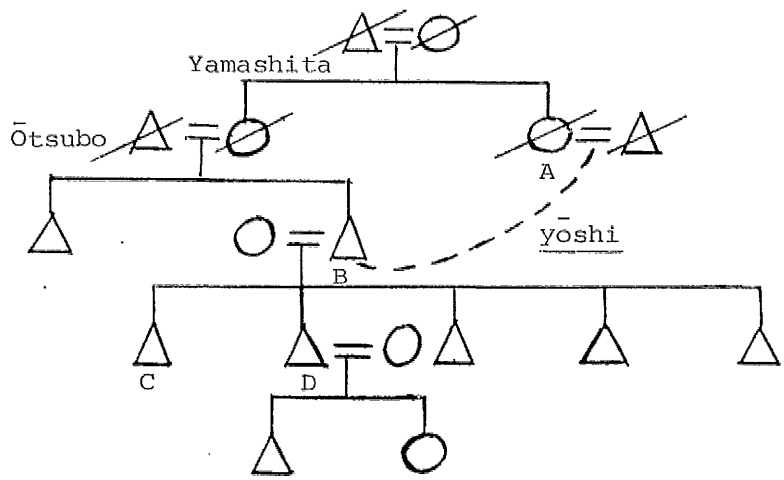

The informant's father, B, is now aged 90 but migrated to this area in search of work when he was 22 years of age. He is the second son of a Shinto family, the Ōtsubos, but as his mother's natal family, the Yamashitas, had no heir to continue the family line he was adopted as a yōshi by his mother's sister (A) and her husband (himself a yōshi to the Yamashita family) who were childless. In this way B changed his surname from Ōtsubo to Yamashita and later inherited the Yamashita Kamidana from his mother's younger sister (A) after she died in 1941. His reason is that "There were no other relatives to take care of it".

In this Kamidana there were ihai of the Yamashita ancestors who were revered at the Kamidana in the same way as other families pay their respects to their ancestors at Butsudans. There are now 10 ihai in the Kamidana, including those of A and her husband and of C, B's eldest son who died at the age of 20 on the 7th of January 1949.

B does not perform any ancestral rites for the earlier ancestors down to and including A and her husband, most of whom B never knew or else (for his aunt A and her husband) knew only to a limited extent. The only relative for (or to) whom he does perform specific rites is his eldest son C, whose monthly meinichi he observes. On the 7th of each month B makes an offering of sakaki at the Kamidana and performs the usual Shinto 'prayer' consisting of two bows, two handclaps and one more bow (nirei nihakushu ichirei). When other family members are present they join him in this. The same rite is performed also on the first of each month (but not the fifteenth) - and so automatically includes New Year - but this is not to a specific individual but to the collectivity of kami. These are the only rites performed at this Kamidana.

Therefore there is some overlap in practice between the functions of Butsudans and some Kamidanas, in so far as ancestors may be revered at both. This corresponds to the lack of distinctions made by most informants between Shinto shrines and Buddhist temples and also between the imputed functions of kami, hotoke and ancestors. All "protect" or "watch over" the living members of the family with very little distinction made in their functions except that some informants say the ancestors (go-senzosama) are "nearer" in some way, especially those who died within living memory.

This parallelism between Buddhist rites and those performed by 'out and out' Shinto families such as the Yamashitas extends also to the timing of memorial services for several weeks after a death. The correspondence is by no means exact, and Shinto has no equivalent to the 35 day rite of many 'Buddhist' families[52], but the Shinto rite on the 50th day is very close to the lifting of pollution rite held by Buddhists on the 49th day. The correspondences are as follows:

Table 3.4 Shinto and Buddhist rites after death

Shinto	Buddhism
10 days (tōkasai)	7 days (shōnanoka)
50 days (gojūnichisai)	35 days (gojūshichinichi or goshichiki)
1 year (ichinensai)	49 days (shijūkunichi or shichishichiki)[53]
	1 year (ichinenki)

There are no equivalent Shinto rites for the Buddhist hōjis after the first year. The different nomenclature reflects perhaps a slightly different emphasis between Shinto and Buddhism, in that each name is made up of the relevant number plus, for Shinto rites, the ending -sai 祭 ('festival' or, perhaps, 'Shinto rite') but for Buddhist rites the ending -ki 忌 ('pollution by death'); however, simply the number of days plus the word for 'day' (-nichi) is used commonly instead.

---

(52) 'Buddhist' is here used to refer to the majority of Japanese families who conform to Buddhist funerary rites even if they do not call themselves 'Buddhists'.

(53) Normally 49 is pronounced yonjūkyū but in this context the alternative readings for 'four' and 'nine' are preferred. It is noteworthy that the reading of 'four' in this case (shi) is a homonym for 'death' and that for 'nine' (ku) has connotations related to suffering through its association with words such as kurushii ('painful') or kurushimi ('suffering').

In Shinto as in Buddhist funeral ceremonies 'incense money' (kōden) is given in a special envelope, of which about a half is used for purchasing a return gift (o-kaeshi). According to B's son (B himself at the age of 90 being unavailable for interview), the Shinto priest nearest the Yamashita home at the time of C's death performed the funeral rites, because the virtual absence of sects in shrine Shinto[54] makes it possible for any Shinto priest to perform this function. The priest prayed to the informant's elder brother (C) by reciting norito (Shinto prayers) but without presenting any offerings of fruit or vegetables etc. As for a Buddhist hōji, all the relatives gather and remain silent while the Shinto priest performs the rites. In Shinto thought, the dead person has now become a spirit (tamashii) which lingers around the house for 49 days; eventually after 33 years it becomes a kami ('god')[55] - although there are a variety of Shinto attitudes to questions about the afterlife or the nature of man in terms of souls or spirits (cf. Spae 1972: 34-38; Matsudaira 1963: 182-4, 194).

Another parallel with Buddhist practice is the inscribing of a posthumous name on the ihai, but in Shinto this is virtually identical with the person's real name in life, just with the addition of the words

---

(54) There are about 79,000 Shinto shrines in Japan, served by about 22,000 priests because many shrines have no permanent priesthood for their one or two ceremonies per year, such as those on Sakurano hill (cf. ch. 12). Only about 1,250 shrines do not belong to the Association of Shinto shrines (Jinja Honchō): cf. Ono (1962: 17-18) and Norbeck (1970: 61-2). 'Sect Shinto' was a classification for the convenience of the Meiji government but now these groups (such as Tenrikyō or Konkōkyō) are normally classified as 'new' or 'other' religions (Norbeck 1970: 57-61; Agency for Cultural Affairs 1972: 30-32; Morioka 1975: 3; Thomsen 1973: 15, 33 ff., 69 ff.).

(55) 'Kami' ('god') has a variety of meanings and can be applied to a wide range of phenomena: cf. Spae 1972: 41-50; Iwata 1979; Ono 1962: 6-8; Holtom 1938: 22-25, 171-184.

. . . no mikoto の 命 ('the life of . . .') to the deceased's actual name. In Buddhism, however, the original practice of conferring an honorific title upon particularly devout people later became extended to anyone - at a price - with the more exalted titles costing considerably more financially (Hashimoto 1962: 12-14; Smith 1974: 82-84). In formulating these kaimyō (posthumous titles) a rank is conferred and a posthumous name is devised which usually contains at least one character used in writing the personal name of the deceased person, but such a practice is absent in Shinto ihai.

In these ways it can be seen that some Shinto Kamidanas become functionally equivalent to Butsudans, just as Shinto kami are conceived of as functionally equivalent to Buddhist hotoke or to the ancestors, and Shinto shrines are perceived as virtually synonymous with Buddhist temples for many people. Ancestral rites are normally performed at Butsudans but may also be performed at Kamidanas. The other common location for ancestral rites is the grave site, such sites being practised by both 'Buddhists' and by 'Shinto' families such as the Yamashitas.

Grave rites

The three principal occasions for visiting the ancestral graves are at Bon (15th August), the Spring equinox and the autumn equinox (both called Higan). Since one of the purposes of the visits is to clean up the grave site (by weeding or washing), those living near to the graves sometimes include them in the end of year general clean-up, at which time they usually present offerings and prayers too, so that, in effect, they visit the graves once in each season. Some families living near to their ancestral graves visit more often, once a month. Three such families were interviewed, one of them being the Kanedas, whose practices have already been described[56]. Another Aoyama family visit the wife's mother's grave elsewhere in Ueno each month, and a Sakurano

family go each month to the grave of their first child who died in infancy. The child's bones are in a charnel house in the centre of Ueno but the husband's parents live not far from Sakurano, where the husband's father constructed a special gravestone memorial 13 years ago, when the child died, to commemorate both the infant and the child's great-grandfather. Though this family, the Matsuis, do not have a Butsudan in the shataku apartment where they live, the husband's parents have one at which the whole family pray together each month[57] on the second Sunday of each month, a date near to the child's meinichi when the whole family can attend. They then clean up the grave and offer flowers, sakaki[58], incense and sometimes sweets or other foodstuffs, at the same time hiring a priest to read sutras for the dead child and for his great-grandfather. Significantly, the deceased infant is still referred to as the chōnan, and his two brothers born subsequently are taught to refer to the dead child as their elder brother. The two other boys are now aged 12 and 10 and throughout their lives have attended these rites with their parents. It is noteworthy also that the gravestone embellished with ornate lettering at which these rites take place is not the actual site of the dead bodies but is an example of a kind of 'double grave', such graves being found in certain rural areas of Japan (cf. Smith 1974: 75-78; Mogami 1963).

---

(56) Mr. Kaneda is the man who inherited his uncle's property without being a formal yōshi and whose recent dream about his uncle prompted a greater participation in ancestral rites.

(57) Mr. Matsui's mother looks after this Butsudan and she offers fresh rice daily.

(58) Sakaki is sometimes used for grave offerings but none of the Ueno informants mentioned it as a Butsudan offering. Commonly it is used as an offering at Kamidanas (cf. also Smith 1974: 91).

Another shataku family have three grave sites because their ancestors belonged to the Zen sect of Buddhism. The main temple of Zen, Eiheiji in Niigata prefecture, contains at least one piece of bone from the ashes of each deceased member of this Nagano family, of both main and branch members. This is "so that all the ancestors can be together and not be lonely". The other part of the ashes of Mr. Nagano's ancestors up to and including his paternal grandfather are in Tsuruga (on the Japan Sea coast) where the Nagano main line (honke) have lived for at least several generations. Mr. Nagano's father, however, was not a chōnan, so, not having any claim on the family property, migrated to Kyoto where he founded a branch lineage. He was buried in Kyoto but his son now lives in shataku accommodation in Ueno[59]. The son goes to his father's grave in Kyoto two or three times per year at Bon and Higan, and, if he has the time, on his father's annual meinichi too. He also visits Tsuruga every year but not at a fixed time for grave visits - only when they have a family holiday such as during 'Golden Week' in May when public holidays occur every other day ('stepping stone holidays') and the intervening days are sometimes taken as holidays too. He hardly ever goes to Eiheiji because it is too far, but if he has enough time off work at New Year the family sometimes visits Eiheiji, where Mr. Nagano reports to his father (rather than to the collectivity of ancestors buried there) about important family events, especially "happy occasions" such as the birth of their child.

---

(59) The widowed mother continues to live in the family home in Kyoto of which Mr. Nagano (the son in the shataku) is the legal owner through inheritance but he prefers to live in shataku rather than living with his mother in Kyoto. If his mother becomes too ill to live by herself the family may move into the Kyoto home, or else, they say, the wife and child might move to Kyoto while the husband remains in Ueno because of its convenience for his work.

A few other informants whose families belong to the Jōdo Shinshu sect of Buddhism also report a similar practice of 'double graves' whereby a portion of each ancestor's bones are kept at the sect's head temple, the Nishi Honganji in Kyoto. One 35-year old man from Niigata prefers to pray to his ancestors there rather than travelling back to Niigata, (having visited the Niigata graves only 3 times in his life so far), but most years he goes with his family to visit his wife's parents in Nagoya, where he prays at his wife's ancestral graves. In theory the wife becomes responsible for the rites directed towards her husband's ancestors (unless her husband is a yōshi) but this informant is not untypical of several men who are not yōshis but perform rites to their wives' ancestors. Usually they do this when both spouses come from the Kansai district or the wife is from the area and the husband from a more distant part of Japan. In such ways there is an increasing 'bilineal' trend in ancestral rites at graves whereby geographical proximity can take precedence over genealogical priority.

In other cases the wife may travel alone or with the children to visit her ancestral graves. Families reporting this practice normally attribute the husband's unwillingness to accompany the wife to his being "too busy". Not uncommonly the wife visits her ancestral graves around the Bon period when she may take the children to visit her parents for a week or so while the husband stays at home on account of business commitments. In a few other cases where the wife makes a day trip to the graves from her home in Ueno the graves are located in an area which involves a few hours' travelling each way and it is clear that the husband is not sufficiently motivated to accompany her.

Distance and transportation to the graves play an influential part in decisions about whether or not to visit the graves, but the limits

of accessibility vary according to individual attitudes and circumstances. For some in Ueno, the Osaka area is considered too far to bother visiting the graves (especially if one has to cross the city) but others visit graves there three times a year. Osaka can be reached in about an hour from Nishiyama station, and some Aoyama residents commute there each day; there are about 4 trains an hour on that route, more frequently in rush-hours. However, in the opposite direction some trains terminate after a few stops and other going further are less frequent. Those with their own cars can travel more easily in that direction but those who do visit graves there are mostly local people from villages or towns within an hour's drive from Nishiyama. Visits to more distant grave sites would require an overnight stay with relatives, and the cut-off points for such people seem to be Hiroshima to the West and Nagoya to the East for those who travel by car, and Tokyo for those who use the 'Bullet Train'. Though the 'Bullet Train' (Shinkansen) also extends to northern Kyushu and more recently to Sendai in north-east Japan, these areas are generally considered too far to visit every year, but some families do visit relatives in such areas every two or three years. Shikoku, normally reached by boat, is considered by some to be close enough to visit annually whereas Hokkaido and the central or southern parts of Kyushu could be reached in a shorter time by aeroplane but the extra expense involved means that most families consider these areas to be too far away for a short family trip. Men sent to these areas on business rarely have time to fit in a grave visit, even if the trip coincided with Higan or Bon, so graves in these areas are infrequently visited by Ueno residents. One woman from Hokkaido said she "really ought to make the effort to go" but regretted that distance made it impossible for her to visit more often; a woman from Kyushu instead sends money to her younger sister and brother-in-law in Kyushu

asking them to visit the graves on her behalf. The money is sufficient to cover the costs of their car journey to a relatively remote area of the island as well as to buy incense and offerings to put on the grave. Several other men and women regularly send money to the Buddhist priest of their home temple in rural areas for the priest to perform the rites vicariously on their behalf. In cases such as the woman who sends money to Kyushu these rites are outside the limits of what are strictly expected of some of these people according to theoretical principles of household allegiance, but their behaviour lies in the realm of 'personal attachments' which Smith (1974: 184-210) has shown to be important in the Butsudan cult but which are not so amenable to anthropological or sociological analysis as are those types of behaviour governed by formal rules.

In the same way the degree of personal attachment to a deceased relative might be inferred from the degree to which a person practises the memorial rites, but this is by no means a clear correlation because of a diversity of other factors. If two men in Ueno have fathers buried an equal distance from the city but one visits the grave more frequently than the other, his behaviour is not necessarily a result of a 'closer' attachment to his father but may be conditioned also by the amount of time he has off work, whether or not he believes his actions affect or influence his father's eternal destiny, the extent to which he may fear supernatural retribution if he does not go, the extent to which other relatives go to the grave, the time elapsed since his father died, and his own birth order in the family. Some of these other factors are not quantifiable, but some correlation can be perceived between grave visiting and birth order.

At Higan slightly more chōnans visit the ancestral graves than younger sons: 41.0% versus 35.6% - but at Bon the percentages are virtually

the same (57.2% and 57.5%). This statistic indicates that chōnans, who have the principal responsibility for the rites, attempt to fulfill their responsibilities at Higan whenever possible despite the fact that they have only one day's holiday from work at that time (both in spring and autumn). Around the Bon period more families may take a few days' holiday, enabling more to visit their ancestral graves, and this seems to account for the higher incidence of younger sons at that time. Overall, including both men and women, 63.5% of respondents visit the graves at Bon but only 45% at Higan.

The extent to which other relatives visit a grave and the time elapsed since a person's death are inter-related to some extent. A few informants said that in the year or two following a parent's death they made more effort to visit the grave than they do now, but they still try to go once or twice a year if possible. In the year or two after the death they are conscious of greater family expectations that they ought to visit the graves, though this awareness was only voiced by Christians who gave this as an excuse or justification for their attendance at the rites.

On the other hand, in most years it is felt that as long as someone looks after the graves personal responsibility for performing the rites is alleviated. Those living away from their natal homes but who have a parent or other relative still in the area consider that the local relative is usually a sufficient substitute for them, as is indicated by the case of the woman who sends money to her sister in Kyushu. However, ideally it is the chōnan who has responsibility for the rites and as he becomes older he is less likely to have a surviving relative who can perform the rites on his behalf, so is more likely to have to do them himself. This in turn is linked to genealogical closeness to the ancestors: as the 'ancestors' in the graves begin to include

their own parents, many sons (both chōnans and others) and daughters begin to feel greater obligations towards the deceased. Many of those interviewed say that they are conscious only of their parents or grandparents when they pray at the Butsudan or graves because these are the only relatives they themselves knew. More distant ancestors are perceived in a more nebulous and less personal manner.

Two examples of grave rites: Dr. Satō and Mr. Yamashita

The following ethnographic description is intended to show what takes place at a grave visit which in this case is relatively 'simple'. More 'complex' rites can include the hiring of a Buddhist priest (for about 5,000 yen) to chant sutras. (One family in Ueno, having tape recorded this once, on subsequent occasions play the tape when they visit the grave rather than paying for the priest's services again). Another aspect omitted by Dr. Satō is the presentation of verbal reports to the ancestors about significant events in the family's recent history, but only a few other families do this regularly. In most other aspects the following account is fairly typical of a grave rite held at a temple. Rites held at public graveyards differ in only a few details such as (sometimes) the absence of a curator or the necessity of weeding around the grave site.

Dr. Satō is a 52 year old biochemist living in Aoyama who teaches at a university in Kyoto. He is a second son whose father died 12 years previously and whose widowed mother lives with her eldest son in Tokyo. However, the Satō family graves lie in the precincts of a Kyoto temple with which the Satōs have been affiliated for several generations[60]. As Dr. Satō is the member of his natal family living nearest to the graves, he tries to visit them in person at least once a

(60) In the Edo period (1603-1868) all families had to register with a Buddhist temple, partly to identify Christians (who were subject to persecution) and partly to regulate population mobility. Therefore many families today still retain an official allegiance to a particular sect and often to a specific temple as a 'parishioner family' (danka) with rights of burial there.

year. In 1983 he had other appointments over the weekend nearest Bon (Saturday the 13th and Sunday the 14th) when most people visited their graves, and it was not until Tuesday the 16th that he was able to go himself. The following account is based on his visit that day accompanied by the anthropologist.

Entering the temple preceincts, Dr. Satō first visits the home of the priest in charge, where he enters a covered courtyard and calls out to announce his arrival. The priest's wife comes to the '*tatami*' room adjacent to the courtyard, kneels in formal position and exchanges polite greetings. She then fetches a small wooden plaque on which is inscribed the posthumous name (*kaimyō*) of Dr. Satō's father and, in smaller writing next to it, Dr. Satō's own (real) name. Taking this with him, and picking up from the courtyard a metal bucket and a long-handled wooden ladle, Dr. Satō goes to find his family graves. In the temple precincts are many graves of the Satō main and branch lineages but Dr. Satō has responsibility for only two: those of his father (who was a *yōshi* who adopted the surname of Satō), and of Dr. Satō's maternal grandfather who started a branch lineage.

After filling the bucket with water from a tap in the centre of the graveyard, Dr. Satō proceeds first to his father's gravestone which he douses from top to bottom by ladling water from the bucket. Already in a rack attached to the front of the gravestone are the plaques indicating that rites had already been performed by Dr. Satō's mother and elder brother, but in fact they had sent money to the priest for him to perform the rites vicariously on their behalf[61]. Branches of the

(61) Dr. Satō did not know how much they had sent but estimated it to be between 3,000 and 5,000 yen (or between £10 and £15).

evergreen shikimi tree had been vicariously offered too. Dr. Satō similarly places on the rack the plaque he had received from the priest's wife, breaks off a leaf of shikimi and places it upside down in a shallow 'drinking trough' a few inches long hollowed into the top of the wider base stone of the grave monument. He says that the leaf is "said to help the spirits drink the water" but he has no idea why it needs to be placed upside down. He then places his hands together and crouches silently in front of the tombstone for a few seconds as if in prayer.

Going on then to his grandfather's grave he repeats the same procedure, the only difference in this case being that a rice-cake (mochi) had already been placed as an offering on the grave by someone else, so Dr. Satō refrains from washing the top of the tombstone in order to keep the rice cake dry. Behind this grave are seven tall plaques, each about 6 feet high, on each of which is inscribed the grandfather's kaimyō: three of them were also behind Dr. Satō's father's grave. These tōba plaques are erected on one of the nenki anniversaries of death when a hōji takes place. They remain out in the open throughout the year whereas the smaller plaques on the racks in front of the graves are removed by the priest along with the rotting offerings a few days after Bon or Higan.

Before leaving the temple, Dr. Satō returns to the priest's house, bringing back the bucket and ladle. He sits on the step leading up to the tatami room and drinks a cup of tea which the priest's wife places on the tatami in front of him, along with a cake wrapped in paper. The two exchange a few minutes of polite conversation, then, having drunk his tea, Dr. Satō takes his leave. He has not touched his cake so the priest's wife wraps it in a napkin and gives it to him

to eat at home[62].

Dr. Satō's attitudes towards these rites will be discussed in a later section as will those of Mr. Yamashita, a man just one year younger than Dr. Satō, whose father's Kamidana rites have been described in a previous section. A brief description of Mr. Yamashita's visit to his brother's grave shows how the practices are virtually identical for this 'Shintoist' as for the 'Buddhist' rites of Dr. Satō.

The informant's brother (C in the genealogy given earlier) was cremated and his ashes then buried in a public graveyard about 10 kilometres away which his father (B), accompanied by the other family members available at the time, visit each year on the 7th of January (C's shōtsuki meinichi), and at Higan and Bon. The very timing of the Bon and Higan visits coincides with the customary 'Buddhist'[63] grave rites at such times. On the way from the local station to the cemetary they pass a few stonemasons' shops specialising in gravestone carving, one of which the Yamashitas visit each time they go the the grave. This shop keeps a small wooden vase[64] on which the Yamashita surname is inscribed in flowing calligraphy (brush sumi)[65]. The Yamashitas collect their vase and also buy flowers (also sold at the same shop) for

---

(62) Dr. Satō says that it would not have been polite to eat the cake there and then because the priest's house would have many visitors that day and he should not take up too much of their time. It is an "old Kyoto custom", he says, for the cake to be given to the guest to eat at home.

(63) 'Buddhist' is here used to designate the majority of Japanese people who perform 'Buddhist' rites irrespective of whether or not they themselves claim to be 'Buddhists'.

(64) Oke, translated by Kenkyusha's dictionary (1954:1280) as tub, pail or bucket.

(65) There are also tin and plastic vases used by some families similarly inscribed.

the grave. They give the shopkeeper an additional 5,000 yen in a special envelope marked o-rei ('honourable thanks') which is to pay for the upkeep of their grave site: the stonemason's family keep the Yamashita plot free of weeds and trim the small boxwood trees (each about 5 to 6 feet high) which surround the plot. Although the Yamashitas do not need to do these maintenance tasks, they do rinse the tombstone itself with water in the same manner as Dr. Satō. The tomb does not contain any tōba plaques or small plaques to show which family members had visited the tomb, and neither is there a groove for putting the leaf and water. They do not offer any food or incense but simply flowers or sakaki branches. Having done so, each family member in turn, starting with B, the eldest, crouch down in front of the tombstone with their hands together and eyes shut in an attitude of prayer for a few seconds (B taking rather longer), after which they leave the graveyard, return the bucket and ladle, and go home.

Differences between Sakurano and Aoyama

The variety of processes detailed above which affect the propensity to perform grave rites and the likelihood of possessing a Butsudan are closely linked to stages in the life-cycle which manifest themselves in a number of conspicuous differences between Sakurano and Aoyama. Four major features are that Aoyama has a greater number of Butsudans, Kamidanas and 'substitute Butsudans' (explained below) and a greater generational depth to its Butsudans than Sakurano. These differences are more quantitative than qualitative and reflect principally life-cycle processes of which the amount of living space is an important sub-process.

The pertinent figures[66] for Butsudan and Kamidana ownership are shown in Table 3.5:

Table 3.5 Distribution of Butsudans and Kamidanas by residence.

	Aoyama	Shataku houses	Shataku flats
Number of households in sample:	213	64	189
Households with a Butsudan:	69 = 32.4%	7 = 10.9%	14 = 7.4%
Households with a Kamidana:	70 = 32.9%	9 = 14.0%	18 = 9.5%
Households with both (also are included in the above figures)	30 = 14.1%	4 = 6.25%	1 = 0.5%

Some of the reasons for these differences are as follows:

a) Butsudan ownership

Most shataku apartment dwellers are younger families whose parents are still alive elsewhere. Even if one parent has died, the other normally looks after the memorial rites at their Butsudan and may live alone while the chōnan and his wife are still living in shataku accommodation. In a number of cases those now living in the Ueno shataku are hoping that the firm will transfer them back to the Tokyo area so are postponing house purchase until they (hopefully) are moved to another factory; in other cases a widowed parent may prefer to continue living in a city like Tokyo rather than moving to Ueno. Such preferences are governed to some extent by the small size of most shataku accommodation but their cumulative effect is to limit the number of 3-generational shataku households to just one out of 253. Therefore most shataku households do not have responsibility for the upkeep of a

(66) The chi-square significance value of these figures is very highly significant: less than 0.005, where any values less than 0.05 are significant.

Butsudan - and the one 3-generational household in Sakurano consists of Christians who do not possess a Butsudan anyway.

The shortage of living space in Sakurano also means that families are less willing to share their homes with elderly parents than are those in Aoyama. Aoyama residents, on the other hand, have rather less choice in the matter sometimes because by the time they have bought their own home their parents are less likely to be able to live by themselves and need more frequent care. Pressures of family size therefore converge from two directions at around the stage in the life-cycle when many families buy their own homes: the children are growing older and may need more space for themselves (including separate desks for their studies: cf. Vogel 1963: 11,47) and the parents are growing older and less able to fend for themselves. Therefore parents tend to move in to live with their children and bring with them the family Butsudan. The parents may continue to exercise the main responsibility for the rites - such observances being traditionally the task of the elder generation: cf. Norbeck 1953: 381; 1955: 116, but the presence of the Butsudan in the house means that the children and grandchildren tend to perform rites there more regularly than previously. Before living with the older generation, the younger generations had performed rites only when visiting the grandparents (at occasions such as Bon or New Year), but some overt or covert pressure to join in the rites is usually stronger when the generations are co-residential.

However, sometimes the older generation dies while still living separately so the younger generation assumes responsibility for their rites and installs a Butsudan in their home. Such a process has occurred among both Aoyama and Sakurano residents, but among those in Sakurano at least two of the three cases interviewed involve house-

holds living in the wooden houses where the husband is aged 45 or over. One of these households had lived previously with the husband's parents until they died. After that the family moved back into shataku accommodation, being blue-collar workers who could not afford to pay off the mortgage on the parents' house. Another case, involving a kachō, is that of a man who had bought his own home (by a company loan) but through transfer to Ueno decided to move back into shataku accommodation. In the meanwhile both his parents had died so he became responsible for the upkeep of their Butsudan. Similar processes probably account for the possession of Butsudans among other higher executives who were not interviewed, thereby producing the higher concentration of Butsudans among shataku residents of kachō and buchō rank.

b) Generational depth of Butsudans

These life-cycle processes mean that in cases where shataku apartment residents do possess a Butsudan the ihai are more commonly those of close kin who have died but are not necessarily 'ancestors' as such. Mr. Maruyama's wife is one such example. Another is a 3-month old child who died 14 years previously of a heart disease. His mother, Mrs. Fujii, still keeps an enlarged photograph of the baby on the wall of her flat, despite having had two subsequent children, and she prays daily to (or for) the dead child. This case is very similar to that of the Matsuis mentioned earlier who do not have a Butsudan but perform monthly grave rites for their dead child. Two other apartment dwellers interviewed possess Butsudans because of an allegiance to one of the 'new religions', one of which is a very small home-made one because of the shortage of space in their flat. Similarly, Mr. Tanaka keeps the ihai of his real and adoptive parents without a formal Butsudan, owing to considerations of space. The other apartment dwellers with a

Butsudan who were interviewed, the Fukuis, had inherited responsibility for a Butsudan 3 years previously when the husband's mother had died (his father having died 14 years previously). He is a fourth son so would not normally have taken on responsibility for a Butsudan but the first two sons died in infancy and childhood so the third son assumed responsibility for the Butsudan; however, Mr. Fukui, the fourth son, also received copies of the ihai of his parents[67] and continues to remember his parents at the Butsudan which he bought himself. These differences in generational depth are shown by Table 3.6:

Table 3.6 Reasons for possessing a Butsudan

Aoyama residents

Name	Generational depth of ihai	Reason for possession
Dr. Morita	11 generations.	He is chōnan.
Mr. Minami	10 ancestors: father is most important.	He is chōnan.
Mrs. Endō	Husband only.	She is widow.
Mr. Sakashita	Ihai of his parents.	He is chōnan.
Mr. Katō	Husband's paternal grandparents Husband's father (Husband's mother lives in adjoining house).	He is chōnan.
Mr. Yoshida	Paternal grandparents, Father, older brother.	He is second son but older brother died without offspring.
Mr. Shimizu	3 generations of paternal ancestors.	He is chōnan.
Mr. Nishihara	"Ancestors from long ago". His mother lives in same house.	He is chōnan.

(67) Smith (1974: 186-188) reports that such copies among siblings are not uncommon and represent the realm of 'personal attachments' which do not conform to formal rules for ancestral rites. In the Fukuis' case the chōnan died before Mr. Fukui was born and the second son not long afterwards so he does not have copies of their ihai as he never knew them.

Table 3.6 continued

Aoyama residents

Name	Generational depth of ihai	Reason for possession
Mr. Harada	Deceased father (who was a 2nd son) Brother who died young.	He is second son but brother died, so he took on the ancestral cult.
Mr. Itō	Paternal grandparents, mother, eldest sister, younger brother.	Father is still alive but could not cope with rites, so he took it over as chōna when he moved to the estate.
Mr. Ikeda	"Many ancestors"	Lives with his parents in 3-generational househol
Mr. Takeuchi	Mother's mother, father, mother.	He is chōnan.
Mr. Kaneda	Maternal uncle and grandparents.	Inheritance as 'quasi-yōshi'.
Mr. Suehara	Older sister only Photo's of grandparents.	Chōnan living with parents.
Mr. Asahara	None	Sōka Gakkai adherent.

Shataku residents

a) Apartment dwellers

Mr. Fukasawa	None	He is 3rd son but belongs to Sōka Gakkai.
Mr. Maruyama	First wife.	First wife died.
Mr. Matsumura	None	Wife belongs to Reiyūkai
Mr. Fujii	3-month old child	First child died at age of 3 months from heart disease, 14 years ago.
Mr. Tanaka	Ihai of real and adoptive parents.	He is yōshi.
Mr. Fukui	Father and mother	4th son with copies of ihai.

Table 3.6 continued

Shataku residents

Name	Generational depth of ihai	Reason for possessio
b) House dwellers		
Mr. Miyoshi	"All ancestors: many in a big kakocho but no ihai."	He is chōnan.
Mr. Mori	"Many ancestors" including parents and grandparents.	Chōnan who has inherited Butsudan.

(Names are those of the household head, official owner of the Butsudan but often another person was interviewed about the rites).

From this table it can be seen that shataku apartment dwellers have Butsudans with a low generational depth whereas those in houses are more likely to have Butsudans with a longer history. It was not always possible to follow Smith's (1974) procedure of asking families to inspect their ihai and provide an exhaustive list of members, but even from what they do know of the membership it is clear that the most recent ancestors are those who are considered the most important and are known whereas earlier generations are referred to in generalised, collective terms.

One final comment is a repetition of Plath's (1964) observation that the term 'ancestor worship' is a misnomer, firstly because some of those represented by the ihai are not strictly 'ancestors', as can be seen in the ihai of the Endō, Yoshida, Harada, Itō, Suehara, Maruyama and Fujii families, and secondly because the term 'worship' is not strictly applicable to the feelings reported by manny at their Butsudans, which are often more akin to concepts such as 'reverence', 'respect' or - as will be shown later - 'memory'. Nevertheless, Smith (1974: 143, 183,

218 etc.), although aware of these problems, continues to use the term with these qualifications in mind owing to the absence of a more fitting term to replace 'ancestor worship'.

c) 'Substitute Butsudans'

Two of the 'Butsudans' in table 3.6 are not 'Butsudans' in the strict sense of the term; these are the *ihai* of Mr. Tanaka kept in a cupboard with other unrelated paraphernalia and the *zushi* of Mr. Suehara kept in the *tokonoma* alcove of their living room[68] (see photograph). The nomenclature might differ but the functions are essentially the same.

The Suehara *zushi* deserves a little more explanation, however. Mr. Suehara's father was the eldest son of a Buddhist priest who grew up in a temple and was expected to follow the 'family business' by becoming a priest too. However, he became critical of some of the formality and life-styles of those in the temple and submitted proposals to simplify the management of the institution. Because his proposals were rejected Suehara-san was put in a position in which he felt unable to remain in the temple organisation. He left and became a teacher of Japanese history at a high school while one of his nephews took over his place in the temple.

The nephew also took over responsibility for the Suehara ancestral cult, which is why there are no *ihai* of Suehara-san's parents, only their photographs, and is one of the reasons why he does not like to call it a 'Butsudan' but prefers the technical term '*zushi*'. The *zushi* does contain one *ihai*, that of their dead daughter,

(68) See chapter 5 for further details on the significance of the *tokonoma*.

plus offering bowls. Mementoes of the parents and particularly of their deceased daughter are kept in the drawer underneath the zushi along with Suehara-san's rosary. He and his wife pray there every day, the wife putting fresh rice as an offering. She usually takes away and eats the old rice of the previous day, whereas many younger families throw away the old offerings(69).

Their co-residential son (aged 35) prays about once a week at the zushi "for a very short time", putting his hands together, bowing and saying "Namu Amida Butsu" ("Glory be to Amida Buddha"), or, more usually, "Man man chan", a children's version of the same phrase which he has been taught since childhood. His 29-year old wife prays each morning just for a few seconds saying "ohayō gozaimasu" ("good morning") and often prays for safety in the home (kanai anzen), or 'absence of illness, life without disasters'(70) and for peaceful relationships with her mother-in-law.

Besides the Tanakas and Sueharas, at least five other families, all living in Aoyama, possess some kind of a 'substitute Butsudan'. One man (not available for interview) wrote 'ihai' on his questionnaire next to the question about Butsudan possession, leaving the question blank because he was unsure of what to reply, but the other four made no indication at all about these practices which only came to light in

---

(69) This may be linked to an older superstition that it is unlucky to throw away even a single grain of rice, the staple food of virtually all families and the main crop of most farms. A few older people are still quite scrupulous about not wasting rice if at all possible.

(70) This is a more literal translation of a common expression mubyō sokusai which has the connotations of 'a perfect state of health' (Kenkyusha's dictionary 1954: 1146); the significance of such common expressions is discussed further in chapter 6.

the course of being interviewed about other topics[71]. It is likely that the prevalence of these 'substitute Butsudans' is higher than these few discovered almost by chance, and they do seem to be concentrated in Aoyama more than in the shataku. The reasons for this lie again in the older average age of Aoyama residents (so that they are less likely to have surviving parents) and in the greater availability of space in Aoyama houses so that room can be more easily made for such altars[72].

In the bedroom of Dr. and Mrs. Satō there is a table set by itself against one wall on which photographs of the deceased fathers of both Dr. Satō and his wife are displayed prominently, each in its own frame[73]. In front of the photographs is a small dish containing a few sweets as offerings, and next to the photos are fresh flowers, a fuda from a shrine and their daughter's recent graduation certificate[74]. Whenever the family is given any unusual delicacy ('mezurashii mono') it is first offered to this 'substitute Butsudan', Mrs. Satō saying some words such as "Look, father, Mr. X has brought this", accompanied by a bow towards the photographs. The food may be left there for a few days

---

(71) In fact one of these same families at the beginning of the field-work period intimated to the anthropologist that he was wasting his time because "very few Japanese people are religious and there are probably very few round here with a Butsudan or Kamidana". It was only 9 months later that the husband mentioned this 'substitute Butsudan' kept in a back room of his home.

(72) Compare in this regard the one example found in the shataku where the ihai are kept in a cupboard along with Mr. Tanaka's camera, binoculars, books and other articles.

(73) The widowed mothers of both spouses live in Tokyo.

(74) This may be not only to show to the ancestors but may be also an expression of the traditional custom of keeping important documents in the drawer underneath the Butsudan (cf. Smith 1974: 88-9).

before being eaten by the family. Every so often[75] Mrs. Satō changes the flowers and when she does so she claps her hands together and bows towards the photographs.

A similar practice is reported by the Kobayashis, a 3-generational family where the husband's father (like Mr. Satō) is also a second son. Living with their son, his wife and baby, they say they do not have enough space for a "proper" Butsudan or even for larger photographs, so instead they remember the husband's parents by offering water daily before two small photos. They do have a "proper" Kamidana, however, which Mr. Kobayashi (senior) inherited as a second son while his elder brother inherited responsibility for the family Butsudan and for the care of their widowed mother until she died.

Another Aoyama family similarly keep photographs of the deceased parents on a special shelf and change the flowers by the photographs regularly. This husband is a second son too, and they consider it "usual" to keep such photographs next to some flowers which are changed frequently for fresh ones. They do not place any food offerings there and deny bowing or praying to the photographs[76].

The final case of an Aoyama family with a 'substitute Butsudan' involves the Sakashita family, who on their questionnaire denied having a Butsudan but when interviewed said that they keep the ihai of the

---

(75) She is not very specific about the frequency with which she does this, saying "about every week or two" when pressed to be specific.

(76) The informant in this case is the wife, as the husband was unavailable for interview, but in a number of aspects the wife tends to be evasive and to avoid giving concrete or specific personal details.

husband's parents with them in the house. Their reason is that the parental home in Nagano prefecture is now unoccupied and "it would be bad if there were a fire and the ihai were destroyed" - a concept which not only reflects the idea that the ancestors actually live in the ihai (Hashimoto 1962: 10; cf. Smith 1974: 65-67) but also the corollary of this that the Butsudan is often the first item to be taken from a burning house(77). However, the Sakashitas also ensured that all was safe in this respect because when they moved to Ueno they asked the local temple in Nagano prefecture to perform a special ceremony to transfer the ancestors' souls from the ihai into the temple. Although Mr. Sakashita is the chōnan, he now considers there to be no need to perform rites, present offerings or pray to these ihai because they have become "just pieces of wood without a soul in them".

These cases show that the ancestral cult extends considerably beyond the formal limits of Butsudan ownership to include the possession of ihai and 'substitute Butsudans' as well as grave rites and rites directed to ancestors performed at Kamidanas(78). Not only are 'substitute Butsudans' more common among Aoyama than Sakurano residents, but so are Kamidanas, for similar reasons.

---

(77) Plath (1964: 314, footnote 10) records that 42 out of 59 households in some hamlets of Kyushu said that the first item they would take out of a burning house is the Butsudan, though Smith (1974: 84-5, 89) comments that it is not clear if all 59 households actually possessed Butsudans. It should also be remembered that often family documents are kept in the drawer underneath the Butsudan.

(78) Smith (1974) deals only with households who possess Butsudans and tends to ignore these other aspects. He also ignores households who do not possess a Butsudan but perform Butsudan rites when they visit a parental home at Bon, New Year or other occasions.

d) Kamidana possession

Whereas Butsudans are acquired by a generalised inheritance principle differentially applied according to demographic circumstances the acquisition of Kamidanas may be through one of three principal channels:

(i) Inheritance;

(ii) Purchase at marriage or moving into a house;

(iii) In response to a serious illness or medical problem.

The seventeen families with Kamidanas who were interviewed may be classified as follows:

Table 3.7 Reasons for Kamidana possession

(i)	a)	Inheritance by chōnan:	2 cases
	b)	Inheritance by yōshi:	1 case
	c)	Inheritance by second son:	1 case
	d)	Brought into chōnan's house by a co-residential parent and not yet formally inherited:	3 cases
(ii)	Purchase at marriage or moving into a house:		
	a)	by newlyweds themselves:	4 cases
	b)	by wife's parents:	3 cases
(iii)	As a result of a medical problem:		3 cases
		Total number of cases:	17 cases

There is some overlap between these categories, because the second son who inherited a Kamidana[79] did so when he married, and

(79) This is Mr. Kobayashi (senior), mentioned above.

one chōnan who inherited a Kamidana lived co-residentially with his parents from the time of marriage and reckoned his ownership from the time of marriage[80].

The categories of 'marriage' and 'house purchase' also overlap because for some couples the events took place simultaneously, though at least four of these couples initially lived in older, wooden style houses in Ueno or Kyoto prior to buying a house in Aoyama. In one case the couple bought the Kamidana when they moved to Aoyama and hired a Shinto priest to perform an installation rite, indicating a definite connection felt between house ownership and Kamidana possession. Four people (two men, two women) said they had always had a Kamidana in their natal homes and felt it was "proper to have one in the home" or was "a part of Japanese history so it is right to have one", the women in particular indicating that they saw it as a symbol of continuity in life-style and values between their natal and marital homes. These attitudes were expressed by those who had received the Kamidanas as part of their dowry from their parents, the Kamidana constituting part of the furniture bought for the house. All these families now live in Aoyama and all but one have lived in houses rather than apartments since they married, and therefore have missed out the '<u>shataku</u>' stage through which many others pass. The one exception is the family who bought their Kamidana not at marriage but on moving into their present house in Aoyama, the acquisition of the Kamidana being to some extent[81] a

---

(80) This is Mr. Miyoshi, one of the blue-collar workers who moved back into the <u>shataku</u> after his parents died.

(81) Considering that thanksgiving is a common attitude towards, or feeling expressed by, Kamidana worship, this may be another reason for their buying a Kamidana on moving into their own home.

symbol of their new status as home owners. Therefore Kamidana possession tends to be linked to some extent with home ownership and is more concentrated among the house owners of Aoyama than in the shataku.

Conversely, the only two Kamidana owners among the apartment dwellers interviewed had both bought their Kamidanas as a result of a serious medical problem in order to pray for healing: one of these men has a recurring problem with blood clotting and the other has a glandular problem causing fluid retention and putting on weight(82).

The other two cases of Kamidana ownership among shataku residents interviewed involve acquisition by inheritance and both of these are older men living in wooden housing. Each also has a Butsudan by inheritance, as detailed in a previous section, and so correspond to the general pattern whereby both Butsudans and Kamidanas tend to be acquired in the second half of a person's lifetime as part of a life-cycle process.

e) Grave visiting

Another difference between the two areas is that Aoyama residents tend to perform grave rites more frequently than Sakurano residents, as a result of two main factors:

i) The higher proportion of local people in Aoyama, often working in local or regionally-based small or medium-sized firms rather than in a nationally recruiting large firm such as Nissei.

ii) The older average age of Aoyama residents, and the higher proportion of those in the 'grandparental' generation, who are more likely to

(82) His wife is the one who 'gives thanks to the ancestors every evening' but also prays for her husband's health and safety at work.

practise grave rites for recently deceased or closer kin than are those in Sakurano.

These factors mean that among those who replied to the questionnaire in November 1981, the following percentages had performed grave rites:

Table 3.8 Grave rites by Aoyama and Sakurano residents in 1981

	Aoyama	Sakurano
Bon	68.1%	56.5%
Higan (either Spring or Autumn)	56.6%	28.3%

f) Butsudan or Kamidana rites at parental homes

Not infrequently informants lacking their own Butsudan or Kamidana reported that they perform such rites at New Year, Bon or other times when they visit their parents' homes. The overall frequencies of such rites are not available because of the absence of information about whether or not the parents possess a Butsudan or Kamidana, though on a priori grounds it can be assumed that many will possess a Butsudan, the exceptions being those who have started a branch family. Among those interviewed without a Butsudan or Kamidana the only ones who did not perform some such rite when visiting their parents are those whose parents were Christians, and even then a few practice what they consider to be rites equivalent to grave visits (such as visiting at New Year the church where a man's father was buried and regarding it as the equivalent of grave rites at Higan or Bon).

Therefore the frequency of such visits is likely to depend upon the distance involved in travel. It has been shown already (in chapter

2) that more Aoyama than Sakurano residents come from the local region, so it is to be expected that the frequency with which they visit their parents will be greater (unless the parents are dead or co-residential). This is borne out by the statistics:

Table 3.9 Frequency of visits to parents per year

No. of visits per year	Aoyama	Sakurano
None (when parents are co-residential or dead)	12 = 4.0%	1 = 0.4%
1 - 3 times	121 = 40.7%	157 = 61.1%
4 - 6 times	44 = 14.8%	41 = 16.0%
7 - 9 times	7 = 2.4%	5 = 1.9%
10 - 12 times	52 = 17.5%	24 = 9.3%
13 - 24 times	35 = 11.8%	14 = 5.4%
25 or more times	26 = 8.8%	15 = 5.8%
Total number of respondents	297	257

It can be assumed therefore that Aoyama residents are likely to practice ancestral rites more frequently at parental homes than Sakurano residents. The prime example of this is an Aoyama dentist who inherited his practice in the centre of Ueno from his father, who continues to live in a house behind the surgery. Going to the building each working day of the year he often sees his father and about once a week pays his respects at the Butsudan there. His wife picks him up from work each day in their car and prays at the Butsudan once a month (on the day just before or after her mother-in-law's meinichi but not on the same day so as "not to get in the way of my father-in-law"), and also at around the times of New Year, Higan and Bon. As this family have neither a Butsudan nor a Kamidana in Aoyama their rites to the ancestors would not be noticed if only those possessing such altars were to be interviewed.

Part B: Beliefs

The Afterlife

In the Introduction it was argued, following Southwold (1979: 637), that a verbal affirmation of a belief combined with practices implying that belief may constitute a 'hard core' of people to whom 'belief' may be attributed[83]; likewise the denial of a belief and the refusal to participate in practices implying this belief may be regarded as marks of disbelief. The preceding sections have focussed on the kinds of practices connected with 'ancestor worship' and it is necessary now to correlate these with verbal affirmations about these practices. However, the more interesting areas are often those in which 'professed belief' and 'practice' do not necessarily correspond. What appears to be consistent or contradictory may require further investigation, and it is in these areas that particular attention needs to be paid to people's own attitudes to the rites and their professed motivations when questioned in greater depth. These give some clue to other underlying 'motivations' (of the type discussed in the Introduction, following Geertz) which may not be apparent when examining only the 'hard core' of 'believers'. Similarly, it is necessary to correlate 'belief' not only with the principal practices assumed to be consistent with that belief but also with less obvious subsidiary practices: hence, if it is assumed that a belief in an afterlife is consistent with not only Butsudan rites but also grave rites, and possibly with some Kamidana rites, then the 'consistency of beliefs' needs to be correlated with all

---

(83) There are certain other modifications and conditions specified by Southwold, but these are assumed to be fulfilled in the theoretical connection between Butsudan or grave rites and a 'belief' in the existence of ancestral spirits.

three variables. However, among the relatively small sample size (100 people) who were interviewed about these matters a fine categorisation into all the permutations of actual belief and practice produces such small groupings that analysis is extremely problematic and no statistically significant results can be obtained[84]. For this reason the present analysis focusses mainly on those variables considered most likely to be important, namely Butsudan and Kamidana possession and regularity of grave visits, and correlates them with the variety of beliefs expressed. The 100 replies are from 50 men and 50 women but among this small sample no clear correlation by sex was observed. Among the questionnaire respondents, 18.4% of the men and 29.3% of the women replied "Yes" to a question asking if they believed in a life after death (literally 'a post-death world' shigo no sekai), and also 28.6% of the men and 40.2% of the women replied in the affirmative to a question about belief in a personal spirit which survives death, indicating some sexual difference which will be discussed further in chapter 10. However, it became clear during the interviews that such statistics tell one relatively little about the content of such 'beliefs'. For this reason the interview data will be analysed in detail rather than the questionnaire statistics[85].

In reply to a general question about what informants consider happens after death, three broad categories could be discerned. These

---

(84) For example, some of the variables of practice include possession of Butsudans and Kamidanas, frequency of rites at these, relationship to the deceased, frequency of grave visits, distance from the graves, birth order, age and co-residence with an elderly parent. There are also many permutations on the 'belief' side regarding whether or not a soul survives death and, if so, what happens to it or where it goes.

(85) The questionnaire statistics remain available on the computer tape at the National Museum of Ethnology if further details are required.

categories are as follows:

Table 3.10 Overall, general responses concerning the afterlife

1)	A soul or spirit survives	36 respondents
2)	"Don't know"	28 respondents
3)	Death is the end	36 respondents
	Total	100

However, following Dore (1958: 363 ff.) this question was followed up by a more specific one about the existence of a heaven or hell. This produced a wider spectrum of answers, as indicated in Table 3.11:

Table 3.11 Beliefs in a heaven or hell correlated with the responses in table 3.10

	Neither heaven nor hell	Both heaven and hell	Heaven but not hell	Don't know	Reincar-nation	Other
Something survives	7	13	6	4	5	1
"Don't know"	7	3	5	11	0	2
Death is the end	18	2	2	3	1	10
Totals	32	18	13	18	6	13

This table shows clearly how the interview responses provide more of an insight into people's attitudes than statistics on a questionnaire. Several comments can be made about the correlations in table 3.11:

i) Among those who initially say 'something survives' seven people subsequently denied any belief in a heaven or hell and did not suggest any alternative concept of the afterlife such as reincarnation.

ii) These people may be identified to some extent with those who affirmed a belief in a heaven but not a hell: in fact only three of those in this category expressed their belief in such terms, the other three saying that they conceived of an undifferentiated afterlife. This probably amounts to the same thing, since logically the concepts of heaven and hell imply a judgement or distinction which is incompatible with the idea of an undifferentiated afterlife[86]. One woman expressed clearly the reason for her views, saying "If I believed in a heaven or hell I would have worries (fuan) about where my father is, but the idea of an undifferentiated afterlife appeals because it gives me a feeling of relief or peace of heart (anshin)". This insight into her thought processes is very relevant when compared with the widespread use of words such as anshin or fuan in other religious contexts, as will be discussed in chapter 6.

iii) Among those who initially said that nothing survives[87] some seemed to have altered their minds when confronted by a more specific question on heaven and hell: two expressed such a belief,

---

(86) This insight that logically we cannot believe in a heaven without believing in a hell was made by an English lady interviewed on a Gallup Poll Survey on religious attitudes and quoted by Gordon Heald in his report on the survey results at the 6th annual 'Consultation on Implicit Religion' held at Ilkley in May 1983.

(87) "Nannimo nai" (Nothing at all) in response to a question worded "Do you think anything happens after death?" (Shinda ato nani ka okoru to omoimasu ka?)

two others said they believe in a heaven but not a hell, and one man decided that he believed in reincarnation.

iv) Five of the six who expressed a belief in reincarnation were from rural backgrounds, but the six were equally divided between men and women. Two of the women in this category gave interesting elaborations on the reincarnation idea, one of them saying that the spirits return to Mount Osore in Aomori prefecture (see Blacker 1975: 83, 159) before they are reborn in this world, the other saying that she thought souls were probably "recycled", using the same loan word from English as is used for recycled paper. When her husband then asked her where she got this idea from, she replied, "I just thought it up myself". The source for two others (one man and one woman) was definitely Sōka Gakkai doctrine, but for the rest seems to have been general ideas about rebirth circulating in Japanese society and, it seems, in rural areas especially.

Of these six who expressed a belief in reincarnation only three possess Butsudans at the moment, two of them the Sōka Gakkai adherents. However, four others (two men and two women) without Butsudans also expressed a belief in reincarnation when initially asked about their attitudes to life after death: three of these are from urban backgrounds. When asked about heaven or hell, two said they believe in an undifferentiated 'spirit world' one expressed a belief in both heaven and hell and the remaining man said "Don't know". These responses indicate that no more than 10% of those interviewed expressed any belief at all in Rebirth, and six of these ten are from rural backgrounds: this is in spite of the fact that all of these participate at some time or other in Butsudan or grave rites either at home or when they visit their parental homes.

v) Similar apparent inconsistencies in responses have been reported also by Dore (1958: 325-328), Ooms (1967: 292 ff.) and Smith (1974: 215-6), indicating that these results are not peculiar to these Ueno residents but that similar attitudes are quite widespread.

vi) Several answers fall into a miscellaneous 'other' category. Two of these (by respondents who at first said "a soul survives" and "Don't know") are "one becomes a star"[88] and "one becomes absorbed into the world of nature", both of which seem to reflect 'animistic' Shinto ideas. These two are both professional musicians and it appears that their musical sensitivity is linked to some extent with a sensitivity towards atmospheres, moods and religious expressions which are not so keenly felt by others. Such a hypothesis is borne out by the fact that the two men who commented in the interviews on differences in their attitudes towards Shinto shrines and Buddhist temples as distinct groups[89] were both musicians with the Kyoto Philharmonic Orchestra. One of them said that at Shinto shrines he feels a sense of "nature worship" and of "the importance of nature"[90], his attitude in prayer tending to be more of petition, whereas at Buddhist temples he feels "a restful and peaceful heart" and "a sense of my ancestors", his attitude in prayer being more one of thanksgiving than of petition. The other musician said that when he first goes to a temple he does not feel

---

(88) One other person mentioned this idea but without conviction, mainly saying "Don't know".

(89) Dr. Satō, a keen amateur musician, also drew a distinction, but only between the temple where his father is buried - where he feels "nostalgia" - and all other temples or shrines, where he feels "nothing".

(90) This is the man who said that after death one "becomes absorbed into the world of nature".

anything but after a while as he begins to pray for safety and for freedom from ill health he begins to have a feeling that the souls of dead people are watching him. At Shinto shrines, however, he has no such feelings but just prays for safety or other matters and puts his money in the collection box. Therefore these 'Shinto' attitudes are strongly expressed by musicians who feel a difference between Shinto shrines and Buddhist temples in contrast to the majority of informants who make no distinction in their feelings between the two types of institutions, though the feelings they do express differ from person to person, mainly consisting of feelings such as gratitude, solemnity, reverence, soothing of one's mood, quietness, seriousness just while praying, duty (to pray because others do so), the desire to make a petition or the absence of any particular feelings at all.

The other answers falling into this miscellaneous 'other' category in table 3.11 will be discussed fully in a later section.

vii) Almost all informants who professed a belief in heaven and hell said that the determining factor was one's own conduct: none mentioned the ritual conduct of one's own descendants and the only ones to mention "faith" professed to be Christians[91]. Two women mentioned a Buddhist concept of Emma-san, the Lord of hell, who decides where one goes and directs his boatmen to ferry the dead souls across the river accordingly: One of them said she "believes this" and the other seemed to have a fear of hell, as will be detailed later (cf. the text referred to in footnote

(91) One, a Protestant, was the only one to mention faith without qualification. The other two were Roman Catholics, one of whom said "faith and one's own conduct" while the other gave the opinion that 'faith' could be in any god, not only the Christian one.

99). Two men mentioned hopes of attaining Buddhahood (jōbutsu): one of these is a Sōka Gakkai adherent; the other[92] is a 'traditional' Buddhist in whose opinion Buddhahood is attained by "not resenting people or being a nuisance to them, helping people and avoiding carnal passion"[93]. The paucity of such references to formal Buddhist doctrine and the general affirmation that salvation is by works rather than faith (even among several whose official denominational allegience is to the Pure Land Sects which in theory stress salvation by faith rather than works)[94] is consistent with the findings of Dore (1958: 345) that a lack of acquaintance with Buddhist doctrine seems to be very widespread. In Ueno this extends in some cases to informants not being able to name the Buddhist sect to which their family officially belongs, although they know the location of the temple which had performed funerary rites for a grandfather: such knowledge is not important until one is confronted with the responsibility of finding a priest to perform the rites for a parent.

viii) The (in)consistency of replies may be explainable to some extent by reference to the distinction made in the Introduction between 'active' and 'passive' belief. To a large extent this is indicated by the comments made by many informants, when asked these

---

(92) Dr. Morita in table 3.6.

(93) It is unlikely that this list is intended as an exhaustive list, but it indicates the kinds of conduct Dr. Morita considers to be most important if one is to obtain Buddhahood (jōbutsu).

(94) At least five informants belong to the Jōdo or Jōdo Shinshū branches of the Pure Land Sects.

questions about life after death, that they had "never really thought about such things before". Having never given the matter serious thought, they often say the first ideas which come into their minds, based to an inascertainable degree on various snippets of information, doctrine, tradition, hearsay or 'superstitions' which they have encountered at various points in their lives. Otherwise, if they are more honest about themselves, they may simply say "Don't know". When then pressed to be more specific about some stem of belief such as heaven and hell - which is prevalent in the Japanese versions of Buddhism (cf. Dore 1958: 364-365) - they may respond in a similar way, assessing subjectively what they have heard of the doctrine from various sources and how plausible they consider it to be, a process which usually takes place in less than a few seconds while answering the anthropologist's question. Where thoughts and opinions on such doctrines are not systematically worked out already the response to such questions may largely depend on the form of the interviewer's questioning.

These questions therefore elicit 'passive' belief to some extent - that is, the willingness to profess a belief in a doctrine (such as that of heaven and hell) when asked directly, but in many cases it is not a 'belief' of such major importance in their lives that it becomes an 'active' belief. Such an 'active' belief may be inferred for the two men who expressed a desire for Buddhahood and indicated the paths they were taking to achieve it - by 'good works' in one case[95] and by

(95) However, this man also performs daily rites at his Butsudan and keeps a conscientious record of the 11 generations of ancestors represented in his kakochō ('book of the past') in order to perform rites to them on the appropriate days or anniversaries of death, at least for those who died within the past 50 years.

chanting for over an hour a day in the other[96] - but most informants do not make Buddhahood their explicit aim and neither practise Butsudan rites nor relate their ethical conduct explicitly to any Buddhist doctrine[97]. Therefore a further examination should be made of the replies given by those who possess a Butsudan, among whom one would expect to find a greater proportion of people professing a belief in the survival of a soul after death.

In fact, as table 3.12 shows, there is not such a clear correlation even among those who possess a Butsudan[98]:

Table 3.12 Attitudes to the afterlife among Butsudan owners

	Neither heaven nor hell	Both heaven and hell	Heaven but not hell	Don't know	Reincarnation	Other
Something survives	1	2	1	2	3	0
"Don't know"	2	1	0	2	0	0
Death is the end	5	0	1	0	0	1
Totals	8	3	2	4	3	1

(96) This is a Sōka Gakkai man mentioned who lives in Sakurano. The other Sōka Gakkai man interviewed, who performs rites for only a few minutes most days (and often was never heard at all during a day) did not mention a hope for Buddhahood but spoke of reincarnation and life continuing for eternity.

(97) Southwold (1983: 175-7) argues that ethics should be viewed to some extent as a part of Buddhist 'practice' and analogous to 'ritual'. Although in Japanese 'practical' Buddhism there is an awareness that Buddhism teaches 'good works', ethics are not normally related to Buddhist ideas except by some of the new religions. Rather, if anything, Confucian ethical ideas are widespread but not normally recognised as Confucian (cf. Moeran n.d.; Reinschauer 1977: 214) and the emphasis in 'Buddhism' is upon the proper performance of ancestral rites.

(98) Omitting those like Mr. Tanaka who possess an ihai and other families with 'substitute Butsudans'.

It should be pointed out that there is some overlap between the 'Reincarnation' and 'Both heaven and hell' categories, because all those who professed a belief in reincarnation also professed a belief in the existence of heaven and hell, but in table 3.12 these 5 people are distinguished according to whether or not they also profess a belief in Reincarnation.

It will be seen that the number of 'inconsistent' replies is far fewer, and amounts to only two possible inconsistencies in the form in which these are tabulated in table 3.12. This is largely a result of classification of survey data rather than inconsistencies in the minds of these informants, as is indicated by the form of words in which their replies were couched:

"I don't really know what happens after death but while I'm alive I try to do good works to avoid going to hell . . . Yes, I do believe in heaven and hell".

"Nothing in particular happens after death . . . I don't believe in hell but I'd like to go to heaven".

The first informant at first says "Don't know" but it is clear that her conduct is to some extent motivated by a fear of hell[99], whereas the second expresses more a 'hope' than a 'belief' in heaven. She is quite categorical about rejecting the concept of hell but is not so willing to reject the idea of heaven and is in fact quite attracted by the idea - this does not amount to a 'belief' as such but seems to be akin to a 'passive' 'belief' in the idea of heaven while rejecting the idea of hell. This is one of the advantages of interview material over

(99) She is one of the two who mentioned Emma-san.

questionnaire data, because such nuances of expression can be more easily recorded in a conversational interview than when one is trying to pigeon-hole replies for a survey. Dore's (1958) analyses of survey data which point out these apparent inconsistencies are based on such kinds of data, so he is left speculating about the apparent inconsistencies between 'belief' and 'practice' (pp. 326-8). The same was true of the first period of fieldwork conducted in Ueno but the second gave an opportunity to discuss matters further with informants and to elucidate their motivations at a deeper level when they initially seemed contradictory. Their replies will be reported in a later section.

Correlating Kamidana possession with professed beliefs about an afterlife, the following results are obtained:

Table 3.13 Attitudes to the afterlife among Kamidana owners

	Neither heaven nor hell	Both heaven and hell	Heaven but not hell	Don't know	Other
Something survives		4			
"Don't know"	2	2	1	2	
Death is the end	3			2	1
Totals	5	6	1	4	1

Since there is a less direct link between Kamidana possession and beliefs in an afterlife than that for Butsudan possession, one might have expected more 'inconsistent' results to be obtained in this sample. However, four of these also possess Butsudans and were included in table 3.12, among whom are the two women quoted above regarding apparently inconsistent views which are largely 'passive' belief or 'hope' rather than 'belief'. The other lady with a Kamidana who at first replied

"Don't know" but then affirmed a belief in heaven and hell was in fact less definite about the latter than is suggested by the table. Her actual words were that she "half believes" that her own ancestors are in heaven. This again is a 'passive' kind of belief in which she is prepared to accept the concept to some extent but unwilling to affirm it wholeheartedly.

What does appear striking about tables 3.11 and 3.12, however, is not so much the logical inconsistency of some replies but the fact that a substantial number of respondents claim that death is the end even while possessing a Butsudan or Kamidana. Moreover, of the 7 Butsudan owners who say this, five perform rites every day. Two of these perform rites to a deceased spouse, one to parents, and the other two to a father-in-law while sharing the rites with a co-residential mother-in-law. Why they should continue to perform these rites while denying a 'belief' in an afterlife is the problem which comes out of this data, a problem which also confronted Dore and Ooms.

Dore (1958: 317-324) and Ooms (1976: 75-79) provide lists of motivations for performing ancestral rites which were found among those people they interviewed. Very similar attitudes and motivations were found among some of the Ueno sample too, and these will now be discussed briefly. In order to do so, a wider sample of informants needs to be included, namely the 70 people who in the first set of interviews were asked systematically about their attitudes and beliefs concerning grave rites. These can be divided into two groups: group A consists of fifty people who try to visit the graves every year if possible but might occasionally skip a visit owing to family circumstances or even wet weather conditions, whereas group B consists of twenty people who very seldom or never visit their ancestral graves on account of distance

or lack of necessity because their parents are alive or someone else has responsibility for the graves.

Dore's first category, worship as an act primarily for the benefit of the spirits of the dead, was most explicitly stated among Ueno residents by adherents of the Sōka Gakkai and was only implicitly present in the replies of some of those belonging to other (more 'orthodox') sects of Buddhism. Both of them view the Butsudan rites as more important than the grave rites and neither of them visit their graves regularly. The Sakurano Sōka Gakkai man goes about once every two years to the graves of his father and paternal grandparents in Niigata, saying it is too far to go more often, and he does not know why he goes except that he says "it is according to Buddhist teaching but I am studying to find out why". The Aoyama man (who is less conscientious about Butsudan rites) rarely goes to his grandparents' grave in southern Kyushu, only for the occasion of a hōji.

Another explanation for ancestral rites concerns ideas that the dead could be malignant or vindictive; this is especially the case for muenbotoke, those who have died without offspring to perform the rites on their behalf. However, only one informant explicitly mentioned the possibility of some kind of supernatural punishment (bachi) if one did not perform the rites, such punishment being manifested in the form of illness or disasters affecting the household, but several others in different contexts acknowledged a 'belief' of some kind in the idea of bachi as a result of doing something bad to living people (rather than to the dead)[100]. This confirms Dore's view that 'the extent and

(100) In the questionnaire 55% of 656 respondents said they thought bachi would occur if one did something bad, but when interviewed were often very vague about how this might happen. Some saw it as a 'cause and effect' relationship, one saw it as primarily a threat to children in the same category as "a ghost will get you if you do that", but the majority seemed to view the concept in a generalised way as suggesting that there is some kind of moral principle

importance of . . . beliefs concerning the possible malignancy of the dead should not . . . be exaggerated. They seem to form merely an undercurrent activated only in the nervous and excitable' (1958: 320).

However, in the course of systematically asking 70 people whether they thought the ancestors would be 'angry or sad' if they did not visit the graves, and correlating their replies with their frequency of grave visits, the following pattern emerged:

Table 3.14 Attitudes towards the non-observance of grave rites

	People who regularly visit the graves	People who seldom or never visit
Yes: Ancestors are both angry and sad	7 = 14%	1 = 5%
No: Ancestors are neither	16 = 32%	18 = 90%
Ancestors are not angry but are sad	13 = 26%	
Ancestors are not angry but are lonely	4 = 8%	
"I would feel guilty inside about it"	6 = 12%	1 = 5%
"I can't say because I go anyway"	2 = 4%	
"Don't know"	2 = 4%	
Totals	50	20

These figures indicate that to some extent the professed beliefs are a rationalisation of practice: those who do not go deny that the ancestors would be angry or sad, except for one man whose father (a third son) and mother are still alive so that his responsibilities to perform grave rites will only become operative when one of them dies. The lady who expressed guilt feelings about not going would have to travel to rural Hokkaido to perform the rites.

(100) continued
in the universe which corrects moral injustices. Few would give this moral principle a name such as 'God' but their ideas are consistent with the finding that 63% of respondents affirmed a belief in some kind of a 'Being above man and nature'.

Among those who do perform the rites with some degree of regularity, the question about their imagined results if they were not to visit the graves is of course hypothetical, but it does reveal some of their motivations for the rites or feelings about them. Those who do say the ancestors would be both angry and sad did not refer to such attitudes when first asked in a general question why they go to the graves. Their replies had been:

"I go to pray for my family's health, to clean up the graves and to take offerings" (one person).

"It's a tradition from of old; you do it on definite days" (2 people).

"It's a custom" (one person), and

"Because the ancestors come back then" (three people).

Only four out of these seven made any explicit reference to the ancestors in their initial replies, the other three all calling it a custom or tradition, further confirming the view that the rites are not often motivated by a fear of possible malignancy from the dead.

The other attitudes indicated in table 3.14 also shed light on attitudes to the rites. The ancestors may be thought to be sad or even "lonely" - a word used spontaneously by four people without being prompted by any reference to the idea in the question. This relates to common expressions in Japanese said to a person about to move to a distant place that "(one) will become lonely" (sabishiku narimasu), the subject of the sentence being indeterminate between the one who goes and the one who stays: both become "lonely" to some degree. Similar emphases on 'partings' constitute major themes in Japanese traditional theatrical plays (Patrick McElligott, personal communication), where a distinction

is made between a parting between living persons who may rarely, if ever, see each other again (iki-wakare) and parting through death (shini-wakare). The latter, however, produces the initiation of grave rites for the departed which have no specific counterpart among those who have parted while still alive, largely because partings at death are inevitable and "can't be helped" ("shikata ga nai" or "shō ga nai") whereas in life there is a hope for reunions. In fact, such reunions do take place among those who attended the same school or university, those of approximately similar ages getting together for reunions at intervals of 5 or 10 years. These may be seen in a sense as structurally equivalent to hōjis for which the whole family meets together to 'meet with' the deceased at a kind of family reunion - which is often a reunion for the living members as well as a 'reunion' with the dead. In the same way, the departure of one member from an existing, continuing group is often accompanied by farewell parties (sōbetsukai), the giving of gifts to the departing member, tearfulness (especially by women) and the whole group going to the station or airport to see off the departing person. All these features are similar to practices at funerals except that the latter is a shini-wakare rather than an iki-wakare (cf. also Plath 1964: 311).

Another motivation for grave rites revealed by table 3.14 is guilt - guilt of a kind produced by the non-observance of ancestral rites. These people answered the question not by imagining the feelings of the ancestors but by imagining their own feelings; similarly the two who could not reply to the question because they go anyway were unable to conjecture on the feelings of the ancestors if they were to cease the rites. Guilt as a motivation for ancestral rites is not reported by either Dore or Ooms, partly because these replies in table 3.14 are conjectural rather than actual feelings. However, even the fact that

guilt may be a 'negative' sanction against ceasing the rites rather than a 'positive' motivation adduced for doing the rites is still a significant motivating force in producing the continuation of ritual practices. Only one man admitted to guilt as a 'positive' impelling force behind his Butsudan worship, and that was the man who felt he ought to have been driving the car when his wife was killed in an accident and who sought to appease his conscience by the performance of rites on her behalf as conscientiously as he could (cf. also Smith 1974: 130).

Other 'positive' motivations are less amenable to simple classification or quantification because of multiple replies by the same person. For example, the reasons given by Dr. Satō for performing the rites are:

"I go because it is a custom; it is also a good time to go as the graves need to be tidied up sometime or other[101] and I suppose I'd feel ashamed if I didn't do it".

Other multiple answers include:

"We received our education from our ancestors so we should remember them; it's a Japanese tradition" (from a 53-year old man),

"Because we have ancestors we should worship them and I want my children to do the same for me. I am the chōnan and inherited property from my ancestors so I should esteem them" (a 43-year old man),

"That's a difficult question. It's a kind of ceremony perhaps, but I can't find any reason not to do it, so I conform to the custom" (a

(101) However, when he did perform a grave rite accompanied by the anthropologist he did not need to 'tidy up' the grave. He washed it symbolically and not out of 'necessity'.

41-year old man),

"It's a Japanes custom and also a national holiday" (a 39-year old woman).

Therefore certain themes can be isolated but not easily quantified; these themes are similar or identical to those discussed by Dore and Ooms and include:

i) The expression of thanks for favours received from the ancestors, either in terms of spiritual protection or in terms of their contributions to the household in the past. Ooms (1976: 79) and Dore (1958: 321) relate this to traditional or feudal emphases on loyalty to superiors and to the way in which the favours received are impossible to repay, resulting in an eternally asymmetric debt relationship.

ii) A result of this is that worship can be seen as a 'form of pledge to the ancestors to conform to certain moral standards' (Dore 1958: 322), an ethical view of ancestor worship which was clearly articulated by Mr. Tanaka, the shataku resident who keeps the ihai of his real and adoptive fathers. He goes to visit their graves in the Tokyo region every other year ("because it is cheaper on train fares than going every year"). When asked what he thinks happens after death he replied that "the mental (seishinteki) presence of the person stays close to those the person was close to, while the dead person goes back to being nothing - however, I'm not too sure as I haven't actually done it and those who have haven't told me!". When asked why he performs ancestral rites then, he replied,

"When in front of my ihai or at a grave it has never entered my head to consider what happens when I die. It is just a matter of ethical values for the living to remember the deceased and to learn self-control through practising the rites."

His views are similar to Confucian values which stress the 'ethical' value of ancestral rites as something good for public morality even if the ancestors are not considered to exist in actuality (see Dore 1958: 322, 326-8). In Southwold's terminology (1979: 631, 635-641) the ancestors are 'symbolically' real rather than 'factually true'. Dore (1958: 328) discusses these ideas at some length and sees in them a solution to his dilemma of how people can practise ancestral cults while denying the existence of any afterlife. However, he considers that such a view could not become prevalent in a society without the rites themselves declining, since (quoting a Chinese proverb) the performance of ancestral rites when the actor denies the actual existence of ancestors is 'like making fish-nets when there are no fish'.

iii) In fact, only Mr. Tanaka expressed this 'ethical' view of ancestor worship among those interviewed, and he himself is hardly representative of most Japanese people: he called himself a 'Christian' on the questionnaire because 20 years previously he had become a Roman Catholic for one year and then a Protestant for three, after which he ceased having any contacts with Christianity[102]. However, several others who perform ancestral rites and do not profess any belief in the survival of a soul do not express such 'ethical' views. One of these is also an exceptional individual, Mr. Takahama, who, like Mr. Tanaka, lives in one of the 'A' type shataku. He was trained as an engineer but later became interested in philosophy through his brother-in-law. On the bookshelves of his flat are books by Kant, Wittgenstein and Fromm, and more general books on Buddhism and Nirvana. He is also very interested in the ideas of

(102) His wife has been a member of Ametsuchikyō, one of the smaller new religions, for about 15 years.

Shinran, the thirteenth century reformer who founded the Pure Land sect and stressed salvation by faith rather than works. Mr. Takahama's views are difficult to summarise but essentially he feels that Paradise or Hell are both extensions of this life. He is interested in the question "what kind of a person is man?" and in particular the concept of ku - a 'vacuum in one's heart' expressed by Buddhism: "phenomena are 'matters of the heart' or mental constructs, whereas materialism is opposed to this and says that reality is what is perceived by the senses."(103) He says this is "not nihilism, but everything in life now and afterwards is a vacuum and empty so does not differ in that way". This one instance is the nearest equivalent among those interviewed to any concept of the 'realm of not-self' mentioned by one of Dore's (1958: 322) informants, but the two philosophical concepts differ in that the 'realm of not-self' is seen as a condition to be reached by Butsudan worship whereas Mr. Takahama's views are much more 'intellectual' and is a questioning of the existence of reality as it is normally perceived. Again, Mr. Takahama's views are those of an unusual individual rather than of the majority.

iv) The mystical experience of 'entering the realm of not-self' therefore finds no counterpart among the Ueno respondents; the idea of 'spiritual training' also finds no direct equivalent but the nearest to this are the views of Mr. Tanaka quoted above and the attitudes of Sōka Gakkai adherents who see their Butsudan rites as conducive to attaining some 'inner peace' as well as the claim by another (non-Sōka Gakkai) man that his Butsudan worship contributes in some way to the attainment of "world peace".

---

(103) See Southwold (1983:86-7) for a fuller explanation and summary of some of these philosophical issues in Buddhist thought.

v) The much more common attitudes to the rites in Ueno, as among the communities studied by Dore and Ooms, involve ideas of respect for the ancestors: these feelings are often mixed with feelings of gratitude to the ancestors and constitute one of the reasons why the term 'worship' seems inappropriate in reference to the ancestor cult (Plath 1964: 306; Smith 1974, 150).

vi) Finally, the ancestors are sometimes seen as 'external arbiters' (Dore 1958: 322) who are said to be 'always watching' (cf. also Ooms 1967: 299). These ideas relate to the concept of hotoke, kami and ancestors as being those who "watch over" and protect the household, such attitudes often being reported by Ueno informants. Some say to their children that they should not do bad things because the ancestors/kami/hotoke are "always watching", and this seems to be a milder version of the use of bachi ('divine punishment') as a threat to discipline children. However, for many adults the concept of the ancestors "always watching" appears to be an internalised sanction which encourages their proper performance of ritual behaviour (and might influence to some extent their ethical practices) in the same way as the neighbours are considered to be "always watching" their social conduct (cf. Benedict 1946: 151, 222-4, 272; cf. p. 173; Kasahara 1974: 402) and thereby influence their attitudes to neighbourhood relationships and fears of local gossip or scandal about themselves[104].

---

(104) In the questionnaire 6 people (0.9% of the sample) mentioned 'neighbourhood relationships' as something about which they have particular anxiety or unease (fuan), related perhaps to the ideas of 'face' (cf. Lebra 1976: 121-8, 182-3) or of shame, as emphasised by Benedict (1946), which place great importance on one's external conduct in the opinion of others. During the first period of fieldwork a family in Fujino committed a group suicide in the hills outside Ueno. The local version of events as rumoured around Aoyama and Sakurano (in the same school catchment zone) is that the son had been caught shoplifting and this fact was known among the Fujino neighbours. The father in anger hit his son so hard (because the family reputation had been let down) that he accidentally killed

vii) Among those who rarely or never perform ancestral rites of any kind there may be rationalisations for non-participation which are also based upon a presupposition that the ancestors do 'exist' in some (symbolic or factual) sense of the term. One man aged 41 says "the spirits are with you always wherever you are so you don't need to go to the graves" so when he travels in an aeroplane he prays to his dead father's spirit at take-off and landing. Another man, aged 42, says he does not know what happens after death but when pressed thinks there is a heaven and hell which one attains by one's own works. He very rarely visits his ancestral graves in Iwate prefecture (north-east Japan), though he sometimes accompanies his wife to visit her ancestral graves in Tokyo. In these ways he is not antagonistic to ancestral rites but when asked about the imputed feelings of his own ancestors regarding his lack of visitation he replied, "Dead people feel nothing".

viii) Among others who rarely perform such rites there may be valid reasons for non-performance which do not imply a lack of 'belief' in the spiritual realm. Taking the 18 people in group B of table 3.14 who denied any concept of ancestral wrath or sadness, two are the men described in point (vii) above, six do not visit because of the long distances involved, four have no responsibility for the rites because another relative does it instead, six had no need

---

(104) continued
the son. The accumulated shame from the family's loss of face in the neighbourhood and not being able to face the social consequences of these events meant that the parents drove to their second home in the hills, there murdered their younger child, a girl, and committed a double suicide, by hanging, in each other's arms.

because of Christian connections[105] and only two showed any marked antagonism or 'disbelief' regarding ancestral rites which would seem to put them into the category of 'non-believers' by the criteria outlined in the Introduction.

Both of these had personal experiences which seem to have predisposed them to become critical of ancestral rites or of 'religion' generally. One 26-year old Nissei blue-collar worker showed a very cynical attitude to all ancestral rites. Towards the end of the interview he said that his parents had separated only a few weeks after he was born, divorcing sometime after that, a fact which seems to have influenced his views on ancestral rites.

The other man, Eiji Yasuda, is now in his late fifties but at the age of 12 found out from a maid that the man he thought was his father was actually his elder brother and that his 'grandfather' was really his father through another maid he had never known[106]. At that time the family business of supplying cloth to Kyoto geisha businesses was declining and not long afterwards the 'grandfather', Eiji's real father, committed suicide by jumping off a bridge and drowning in a river because he was unable to pay off his debts. Shortly afterwards, at the age of 14, Eiji joined a Buddhist youth movement and volunteered to go abroad, along with a number of other volunteers, as a 'missionary' to convert foreigners to

---

(105) Not all of these are Christians themselves but three of them had Christian parents so regard themselves as free of any responsibility to perform Buddhist rites for a Christian. One of these visits the church in Tokyo where his father was buried "if New Year falls on a Sunday" as a kind of substitute grave visit but has no other connections with any church.

(106) A similar practice by another Ueno family involves the eldest daughter's illegitimate child being brought up by her grandparents as if she were their child.

Buddhism. They went on the understanding that they would be supported by a temple in Kyoto but no support came, so the volunteers were stranded in various parts of South and South-east Asia and the Middle East. Eiji managed to find a job cleaning shoes and doing other menial tasks at the Japanese Embassy in Kabul until at the outbreak of war he returned to Japan with the Embassy staff, by then "completely disillusioned with all religion", feeling that all religion eventually leads to a 'dead end' because that was his experience with Buddhism.

A similar case of disillusionment was also reported by Dr. Morita about his wife who went to a Roman Catholic school and was so put off religion that she refuses to discuss such matters with him. He requested that the interview be held at the anthropologist's home rather than at his own, and because of his wife's attitudes he has a very small Butsudan with a kakochō ('book of the past') as a record of the death dates of his ancestors rather than the original 29 ihai which are kept in a larger Butsudan in the house in the country where his parents used to live and is now occupied by Dr. Morita's younger brother's family.

Resolution of the problem

All the above motivations for ancestral rites account for the majority of respondents but fail to account for all of them. There still remain over 17 people who deny the existence of any afterlife but who nevertheless practise some ancestral rites. Five of these perform Butsudan rites, four of them daily and one weekly[107]. Another nine perform grave rites regularly each year, one of them each month. Of the remaining three, one (Mr. Yamashita the younger) performs Kamidana and

(107) This is the younger Mr. Suehara at his father's zushi, here counted as a Butsudan.

grave rites to his older brother if he is at home when his father performs the rites, another occasionally performs grave rites at hōjis and the third performs Butsudan rites when he visits his parents and as chōnan will inherit the responsibility for continuing the rites. All these people say that death is the end and in table 3.11 are classified in either the 'other' or 'neither heaven nor hell' columns.

It has been shown already that only one man explicitly affirmed the 'ethical' interpretation of ancestral rites which Dore (1958: 327-8) uses to account for the discrepancy between practice and belief which he found when analysing his data, but none of the 17 or more remaining 'problematic' individuals in Ueno adopted such a view of ancestral rites. It appears as if Dore was unable to return to his area of Tokyo in order to discuss more fully with his informants why there seemed to be this discrepancy. This opportunity was afforded the present researcher in Ueno during his second period of fieldwork, when some of those interviewed in the first period were questioned in greater depth and a further 30 people were interviewed in a less structured manner which allowed the researcher to investigate these matters further[108].

Apart from the 'ethical' hypothesis advanced by Dore, there is the view of Ooms (1967: 303-318) that a minority of his informants seem to be 'true believers' and that others had less serious attitudes to the ancestral rites but continued the practices even if they no longer 'believed' in an assumed 'original meaning'. Just as it was argued earlier that there is no historical evidence to show that Butsudan (or Kamidana) rites

(108) This was made possible by an increased facility in the Japanese language, whereas during the first fieldwork period language limitations tended to make the interviews more rigidly structured.

have declined from an assumed daily pattern, so also there is no historical evidence to show whether the degree of "belief" was in fact greater in the past as Ooms assumes. When he writes of rites remaining like fossils from an earlier time (1967: 315 f., re. 'survivals') and of the sphere of 'religion' becoming that of 'play' he appears to be adopting, perhaps unconsciously, an ethnocentric view which ascribes priority to belief over practice (cf. Southwold 1983: 135) whereas even what his own data shows is that the practice is constant but the beliefs associated with it differ to the extent that, following Robertson Smith (1927), one would be led to argue for the priority of practice. There is no reason to suppose that in the past there were not people who questioned or doubted the existence of an afterlife but, like today, such doubts would be rarely if ever voiced in public so that the practice would continue throughout the generations regardless of the degree of 'belief' in small rural communities (cf. Southwold 1983: 93-95). Even if belief preceded practice when people in the village first adopted Buddhism many centuries ago, this does not follow the same pattern for succeeding generations who grew up in households where the practices and related beliefs were taken for granted so they acted as if they believed and perpetuated the pattern (cf. Southwold 1983: 47-48).

Smith's (1974) excellent analysis of ancestral rites nevertheless avoids this question of doubt and of the consistency of practice and professed belief or disbelief. He is content to assert that in the ancestral cult it does not matter particularly whether local variants conceive of the ancestors as in the <u>ihai</u>, out at sea, in the mountains, in the graveyard or wherever as long as they are <u>somewhere</u> (1974: 66; cf. also pp. 215-6), but in Ueno one finds people who practise ancestral rites but say the ancestors are nowhere. This dilemma is best resolved

by simply asking the informants what they themselves think about the matter.

The unanimous answer is that what is important for them is not the existence of the ancestor but the memory of that person. They expressed this in a variety of ways. Seven (five of them women) stressed the importance of feelings (kimochi), saying "the ancestors are in one's own feelings (kimochi)" or "I do the rites in order to esteem the ancestors properly in my own feelings (kimochi)", whereas others (mainly men) tend to stress the importance of memory or recollection, using terms such as omoide ('reminiscence'), natsukashii ('nostalgic') or kinen ('commemoration'). Some case studies will illustrate these attitudes.

Dr. Satō's grave visiting practices have been described in detail earlier but he denies any belief in the survival of a soul after death on the grounds that this cannot be proved scientifically(109). When asked about his attitudes and thoughts when he bows before his father's grave for a few seconds, he says that he has "a feeling of nostalgia" but that is all(110).

Mr. Yamazaki is a 41 year old schoolteacher who as chōnan will inherit his parents' Butsudan. Each summer holiday he visits them for about 10 days or so, when he prays each day at their Butsudan, which he says gives him a "feeling of security" but he never prays at his parents' Kamidana. Once a year at Bon he visits the graves of his paternal grandparents and great grandparents and that of his father's brother who was

---

(109) Nevertheless, at one point in the conversation he admitted to a "feeling" that "there is something beyond our knowledge" but when asked to elaborate he returned to his 'scientific' scepticism.

(110) He has this feeling only at this particular temple and not elsewhere (cf. footnote 89).

killed in the war while still unmarried. At the graves Mr. Yamazaki reports to the deceased about any major family events and gives thanks to the ancestors for his family's health during the previous year. He also lights candles and incense sticks and places fresh flowers as offerings, whereas at the Butsudan he offers rice daily ("to help my mother when she does it") and changes the flowers every few days.

However, he says that "nothing at all" happens after death and that there is no heaven or hell. When then asked where his ancestors might be, he replied, "In my imagination" and again denied the existence of any spirits which survive death. He then went on to explain about his attitudes to the rites:

"I pray and make reports at the Butsudan and graves in order to reflect on my life and to watch my steps in future. As the ancestors are supposed to be enshrined (matsurarete iru) in the Butsudan, I imagine in my mind that they will come and listen to me". Although at present he claims that he puts the offerings on the Butsudan in order to help his parents "and that's as far as it goes", he admits that he will most likely continue to offer the rice, water and incense on a daily basis when he inherits responsibility for the Butsudan. Although he, like all others asked[111], does not think the offerings are 'eaten' by the ancestors or benefit them in any tangible way, he says that the performance of these ritual acts "evokes a nostalgic feeling (natsukashii kimochi) and nostalgic thoughts (natsukashii omoide) in memory of my forebears", assisted by the presence of their photographs in the same

---

(111) Several people were asked about this and all denied that the offerings actually benefit the ancestors materially, each seeing them as "a custom" which they think is important to continue "for the sake of one's feelings (kimochi)".

room. As there are many varieties of memories he is unable to specify exactly what kinds are evoked, but the ritual serves as a reminder to recall thoughts of his ancestors, and in the future more specifically of his parents ("ryōshin o omoidasu yosuga to suru tame ni Butsuzen de oinori shimasu").

Mr. Fukui is the fourth son who has copies of his parents' ihai to which he and his wife burn incense and offer tea daily, sometimes also fresh rice or flowers. At Bon and sometimes at Higan they visit the graves of his parents in Osaka and put offerings of fruit, flowers, sake and sweets. They also take with them photographs of events during the previous year (such as the birth of their second child and their first child's entering kindergarten or celebrating a Shinto rite[112] and Mrs. Fukui holds up these photos in front of the grave to show to the husband's parents. Afterwards they take the photographs home again with them while they leave the other offerings.

Although Mrs. Fukui does think that a spirit remains after death, her husband says that "nothing" remains. However, he too feels it is important to remember one's parents and this symbolism does assist him to do that to a limited extent. "Everyone has some dear feelings towards their parents and may wish sometimes that they were still alive. The parents might scold him or cheer him up; if they were alive they would share in his sadness when depressed or share in his happiness when things go well, or try to help him in whatever ways they can. So thinking about these kinds of thoughts I remember my parents at the Butsudan and graves."

Gratitude for property received and the desire to preserve old

---

(112) The 7-5-3 ceremony to be discussed at the end of this chapter and also in chapter 4.

family traditions are elements in Mr. Hamano's attitudes about the importance of memory. As described earlier, he has been adopted as heir to the family estate so he considers that he should continue the rites at the Butsudan, Kamidana and images of Kōjin and Kōbō Daishi to at least some extent once he inherits the family house, although at the moment he never prays at any of these. He states categorically that "death is the end, for man and animals alike, and no soul survives" and denies any belief in a heaven or hell; however, he also says that he "cannot neglect the ancestors" partly because he is the 11th generation in an old distinguished family line, and partly because he will inherit considerable property from them. His intention to perform ancestral rites at the Butsudan in the future, however, is based on his feeling that "it is important to preserve the memory (kiroku) of the household, especially for an old lineage like mine." He says that hōjis and other rites "have no meaning: they are just customs, but have the useful function of bringing together widely scattered relatives for a family reunion when we can talk about old times".

His wife similarly denies any belief in spirits, souls, heaven or hell, and for her the "ancestors are a mental construct, symbolised by the Butsudan; the rites are just for commemoration (kinen) or memory (omoide, kiroku). Any form of commemoration would be sufficient", "but it is easier to preserve the traditional forms of candles, rice and reading sutras because it would be difficult to introduce new forms". While she regards such rites as "customs" she also feels it is important that her name be entered eventually in the family's death register (kakochō) so that her memory will continue to her children and grandchildren.

A similar case involving both property and its transmission to non-lineal kin is that of the Kanedas. During the interview with her husband, Mrs. Kaneda was present and gave some comments too, including nodding her head in assent when her husband said they perform the rites "to comfort the ancestors"[113]. However, shortly afterwards Mr. Kaneda left the room to answer the telephone so his wife was asked more about her views, and it was then that she expressed the opinion that "nothing survives death and the body just dies naturally", going on to say that "although I do not believe in a life after death it is my responsibility to my husband's mother to perform these rites. Having possession of the Butsudan means that I have to do the rituals to fulfill my responsibilities as wife and as daughter-in-law. It is not exactly an obligation (giri) to my husband's maternal uncle (C in the genealogy given earlier) because I never knew him, as he died 10 years before we were married, but if my husband were to die before me I would do these rites as giri to him".

Although her words do not refer to the concept of memory as such, it is plainly implied that the responsibility for the rites not only depends upon status (as wife or daughter-in-law) rather than upon 'belief' for Mrs. Kaneda, but also that her feelings of obligation (giri) are conditioned to some extent by personal acquaintance with the deceased: she does not have an obligation directly to the departed but only indirectly through her husband and mother-in-law, an attitude which is not dissimilar to that of many informants who say that they do not pray to the collectivity of ancestors so much as to those they personally

---

(113) It was he who not long previously had been motivated to perform more frequent or conscientious ancestral rites by a dream concerning his maternal uncle.

knew (cf. also Dore 1958: 143, 323; Smith 1974: 145-6). A comparable case is that of the younger Sueharas. The son denies any belief in an afterlife or in a heaven or hell[114] but he prays weekly at the zushi. He says its "only meaning is to remember my elder sister, but not in a very concrete form - just a feeling related to her". His wife, however, who does say she believes in a soul and in heaven and hell, never knew her husband's sister so her feeling is the same as that at a shrine or temple, which she expresses as "a wish for safety and peace etc. - particularly peaceful relationships with my mother-in-law".

Among younger people with less specific memories of their ancestors the few remaining memories can still be motivating forces. A 22 year old student sharing a rented house in Aoyama with 3 of his friends says that his parents have a Butsudan but he never prays at it and he has never yet visited the graves of his grandparents and other ancestors in Kyushu. In his questionnaire he expressed a belief in a soul or spirit which survives death but not in a 'post-death world' (an expression used for 'life after death'). When interviewed he again confirmed these ideas and more clearly expressed his views that death is the end and that there is no heaven or hell. He explained his belief in a 'spirit which survives death' as follows:

"Even if my grandfather is dead, he is alive in my heart. The memory of him makes me want to work hard (ganbaru), to go the right way

---

(114) 'Like Dr. Satō, Dr. Suehara is a natural scientist (a theoretical physicist) and denies any belief in an afterlife because of his belief in science - both men explicitly giving this reason - but Dr. Suehara is more willing than Dr. Satō to entertain the idea of a supreme being, which he calls a "unifying law" ruling life and nature which he does not personify but says he does "not exclude a sincere attitude to the Maker" by his comments, because he sees the goal of his science as uncovering the laws of the universe.

and avoid the wrong way. When I am in trouble or difficulty - although such times are not frequent - I sometimes shut my eyes and think about my grandfather who died at the age of 60 when I was 6 years old. I can still remember him telling me to do my best (ganbatte) and so when I think of him I also whisper to myself 'ganbatte'".

Miss Takeuchi, an unmarried woman of 30 living with her parents in Aoyama performs rites daily at their Butsudan and Kamidana but says she does not know where the ancestors are, but thinks that if they are anywhere they are "not in heaven or in the graves or the temple but in my own heart (kokoro)". Very similar attitudes were expressed by a 42-year old kachō living in Sakurano, Mr. Mori, who prays daily at his Butsudan and Kamidana but does not know about an afterlife, saying "it is difficult to specify where the ancestors are, because the Butsudan and grave rites and prayers are a matter from the heart (kokoro) and really the ancestors are in my own heart (jibun no kokoro no naka ni) and have their existence together with me (jibun to issho ni sonzai suru to omotte imasu). The rites are to honour the ancestors (senzo o taisetsu ni suru) because if it had not been for them he would not have any existence himself.

These last two cases are among several which are not so clearly related to memory and which constitute the additional members of the '17 or more' mentioned earlier. Among others in this group are Mr. Tanaka, whose reference to a "mental presence of the deceased person" staying "close to those he was close to" seems to be the same as these other concepts of a memory remaining while the body perishes and no soul remains.

At least two other men speak of the ancestral rites as "customs" which they say have "no real religious meaning" but they want to preserve a traditional custom which is to "remember the ancestors" (senzo no koto o omoidasu tame ni). These are the words of a chōnan who does ancestral rites at his parents' home, and a similar idea of 'custom' is expressed by the younger Mr. Yamashita who denies any belief in an afterlife or heaven and hell but says that the Kamidana rites on his brother's meinichi are "a custom with no meaning". Formally his brother is a kami (god), he says, but when Mr. Yamashita puts his hands together with hand claps and bows at the Kamidana he "merely remembers" his brother while the latter was alive "without a sense of worship". However, if he does not know a person he does say he has a "sense of worship, as to my ancestors", referring to the others whose ihais are also contained in the family Kamidana. However, he defines "worship" as "natural feelings" which he says he is "unable to explain well"(115).

The idea that a practice is a "custom" rather than being "religious" often arose in interviews in relation to many different topics, and seems to correspond partly to the distinctions drawn by Southwold (1983: 150-152) between 'believe in' and 'believe that'. In Japanese, to 'believe in' a religion (shūkyō o shinjiru) is different from to 'hold' or 'preserve' a religion (shūkyō o mamoru), which many would claim to do while not 'believing in' it. However, to preserve or hold a religion does not even mean to 'believe that' the doctrines are 'true'

(115) He did not supply the Japanese idioms because he spoke fluent English. He did not want to use Japanese terms because he asked for the interview to be conducted at his place of work (where other employees in the open plan office could overhear the conversation).

in any 'factual' sense and it is rather stretching the idea of 'truth' to say that those quoted who deny any belief at all in an afterlife 'believe that' a soul survives in a 'symbolically true' sense (cf. Southwold 1983: 76, 143-152 etc. and 1979: 635-9). Moreover, the terms 'believe in' and 'believe that' in the sense of a distinction between 'faith' (in) and 'belief' (that), as used by Evans-Pritchard (1956: 9 ; cf. Southwold 1983: 152), can be used of personalised beings but not so much of abstract doctrines; for such reasons the terms 'active' and 'passive' belief are preferred in the present context. It seems that most of those informants cited in the preceding pages did not even have a 'passive' belief in the doctrine of an afterlife but rejected it completely: these constitute the 17 definite cases of such people who nevertheless perform ancestral rites for reasons they themselves state as relating to 'memory'. However, a few more who are rather less specific about their rejection of an afterlife (e.g. Miss Takeuchi and Mr. Mori) and the 'ethical' view of Mr. Tanaka put the numbers up to at least 20. At least three more people who practise regular ancestral rites but deny any belief in an afterlife are probably to be included in this category too but they were interviewed in less depth (during the first fieldwork period) and it was not possible to interview them again more thoroughly.

Therefore at least 20% of the 100 interviewed stress the importance of 'memory', of which 17 people explicitly deny a belief in an afterlife. All of these practise ancestral rites at least occasionally. There were in addition three others interviewed who sometimes perform ancestral rites, who also denied any belief in an afterlife, and who when questioned about this paradox seemed at a loss for words and admitted that there was a "contradiction" (mujun) which they were unable to

explain. (In at least one case the informant seemed to have participated in the rites simply to accompany his parents). Whether or not the recourse to 'memory' is a rationalisation for behaviour which would otherwise appear to be contradictory can be tested to some extent by whether or not 'memory' as a 'motivation' (in the sense used by Geertz) can be traced in other areas of Japanese social life.

It can certainly be found in other areas of the ancestral cult apart from the 17 people who deny a belief in an afterlife. Apart from Mr. Tanaka and Mrs. Hamano two others expressed a desire for their children to remember them through the performance of ancestral rites, of whom one is a man who also denies any belief in the afterlife[116]. Many more said how their attitudes to the ancestors were largely focussed on those within their own living memory (cf. Smith 1974: 145, 149; Dore 1958: 143,323; Plath 1964: 302, 308-9); a few quotes will suffice to illustrate this:

"There are 7 ihai in the Butsudan - those of my great grandparents, my grandparents and of my father's 3 brothers who were killed in the war, but my grandmother was the only one I knew when she was alive so when I pray at the Butsudan I can visualise only her. That's why I pray to all the ancestors but only give thanks to my grandmother" (a woman aged 38).

"In the Butsudan are the ihai of my father's parents, my mother, my elder sister and my younger brother. I pray to the ancestors (go-senzosama), to my dead mother in particular, because they are closer

(116) He is one of the three interviewed in the first fieldwork period who was unavailable for interview again (because he had moved out of the shataku to another area).

than the Buddhas (Hotokesama)[117]" (a 43-year old man).

"When I was a child I lived with my mother's parents because my mother was working, so when I go to the graves it is a good chance to meet my grandfather again" (a 23-year old man).

"I don't go to the graves every year because I don't know all my ancestors - only my grandfather, whose grave is near Kobe. If we lived nearer there, I'd probably go at least once a year, on his annual deathday, but in fact the last time I went was 3 years ago when the whole family gathered for his 13 years' hōji. Then I put flowers and incense on his grave because I have many memories of him, but I do not bother with such events for my grandmother or other deceased relatives" (a 37-year old woman).

There is therefore a cognitive and emotional emphasis on those who have died within living memory, called by Plath (1964: 301-4) 'the departed', as compared to the more distant ancestors who eventually are no longer distinguished individually by meinichi rites but are merged into the collectivity of the ancestors (Plath 1964: 303; Smith 1974: 146, 183) and become Hotoke (Buddhas) rather than hotoke (ancestors) in Dore's distinction (1958: 457). Smith (1974: 56) gives the following stages in the regular progression of the souls of the dead:

shirei	:	spirits of the newly dead
nii-botoke	:	new buddhas
hotoke	:	buddhas
senzo	:	ancestors
kami	:	gods.

(117) This reply was given in response to a question similar to that of Dore's (1956: 457), who distinguished between 'ancestor - hotoke' and 'Buddha - Hotoke'; the latter he wrote capitalised.

It seems that some informants in Ueno would place senzo ('ancestors') as nearer than the Buddhas (Hotoke in Dore's terminology), while many others would not distinguish between Hotoke (Buddhas) and kami (gods), so their conceptualisation of the progression may be a little different from that in Smith's schemes. Their conceptualisation seems to be:

shirei nii-botoke senzo or hotoke	'the departed' of Plath's terminology.
Hotoke or kami	

In addition, those influenced by Shinto ideas of the dead may identify 'the departed' as tamashii (spirits) which eventually become kami (gods) or may identify the shirei (or shiryō) as 'raging spirits' (those who died in a negative frame of mind such as resentment or jealousy) which are not dissimilar in their effects to muenbotoke or gaki (wandering or hungry ghosts): Matsudaira 1963: 185-6; cf. Smith 1974: 41. However, despite the variations in terminology one strand is constant, namely a clear conceptual difference between the recently departed and the more distant ancestors, and this distinction is made on the basis of whether or not the departed still 'survives' in the memory of a living person. It is 'memory' which provides the dividing line, and which may also serve as a reason for choosing to honour a recently departed person who is not strictly an 'ancestor' but who is someone whom the living wish to remember (cf. Plath 1964: 301).

The variety of words used for 'memory' also indicates that the concept has cultural importance as a 'key theme' analogous to Moeran's (1984) stress on 'key words' which indicate culturally important 'core

areas'[118]. Some of the 'key words' relating to the theme of 'memory' in Japanese are as follows:

Omoide	('reminiscences', 'recollections' 'fond thoughts').
Natsukashii	('nostalgic')
Kinen	('commemoration')
Kiroku	('a record')
Kyōshū	('nostalgia'; 'homesickness for one's native place')
Kaikyō	('nostalgia', 'nostalgic reminiscence', especially for one's native place)
Kaisō	('retrospection', 'reflection', 'reminiscence')
Tsuisō	('retrospection', 'reminiscence')
Yosuga	('a reminder')

There are also related verbs such as omoidasu ('to recollect'), furikaeru ('to look back upon'), or mune (or kokoro) ni ukabu ('to float into one's mind'), but all these words tend to express memories directed to personal experiences (of a person or place) as distinct from the memorisation of facts in a school, for which other words for 'memory' (anki or kioku) are used.

For these reasons, 'memory' does appear to be an important motivating force behind many expressions of the ancestral cult which are directed to memorial rites for a specific, remembered person. It is seen most clearly among the 17% to 20% of those interviewed who perform such rites without any professed belief in an afterlife, but may also be an underlying 'motivation' among those who do profess a belief in an afterlife. If the term 'ancestor worship' is a misnomer (Plath 1964), then the term 'memorial rites' may be much more applicable than is apparent at first sight. Even though the Japanese terms for

(118) Compare also the discussion on this in chapter 1, regarding the use of 'key words' to indicate 'key themes' in a culture.

such rites (such as hōji) bear no reference to 'memory' in their semantics or their written forms in the Chinese characters, the underlying motivations and attitudes are full of references to memory, especially among those who perform the rites but deny the existence of an afterlife.

If 'memory' is a strong 'motivation' in Japanese society of the type described by Geertz, then it ought to be present in a number of other contexts which lie outside the 'religious' realm, but even in these 'non-religious' realms should be conspicuously present in Japan. The remainder of this chapter will highlight a few details in some of these diverse areas.

The sphere of 'memory'

a) Preservation of a child's umbilical cord

All hospitals in Japan give to mothers after childbirth the tip of the child's umbilical cord which was attached to the infant's navel area before the cord was cut. This fragment of umbilical cord is kept in a special preserving powder and presented to the mother in a special box, often decorated or else made of polished wood. All mothers keep this[119], and, when asked why, they invariably say either "because the hospital gave it to me, and as it was a part of both myself and the child I cannot throw it out" or "I keep it as a kinen (souvenir or commemoration)", some adding that they regarded it as a "proof" (shōmei) that the mother and child were once connected.

(119) Eleven mothers were asked about this and all replied that they kept the child's umbilical cord, usually in a chest of drawers (tansu) or another cupboard around the home.

One commented that her 5-year old child was fascinated by being shown her umbilical cord and since then often pointed to her navel in the bath, saying "That's where I was attached to my mummy"[120].

Two women took this idea further into a 'religious' sphere, one of them saying that the umbilical cord indicates one's "connection with the ancestors", and another saying that she had recently heard that the umbilical cords of the children should be put in a mother's coffin when she died, so that the cord would also go into the afterlife and would remain as a link between the deceased mother and her children. However, none of the other mothers mentioned any such idea, a few of them saying they would receive their own umbilical cords when their mothers died. Moreover, the woman who mentioned the idea of putting the child's cord in the mother's coffin had received her own umbilical cord from her mother and it was only after she had heard this idea from another woman that she then considered returning her cord to her own mother; she had not yet done so at the time of interview.

This practice of keeping umbilical cords was investigated only in the second period of fieldwork so information on it was derived from only a small sample of 21 informants, 10 of them women. All the women

---

(120) There are undoubtedly connections between the preservation of umbilical cords (heso no o, literally 'navel string') and the emphasis on the navel (heso or hozo) in many other contexts, from meditation to medication, which are related to ideas about the stomach as the seat of one's emotions (cf. Lock 1980: 86-88; Ohnuki-Tierney 1984: 56-60). In the Mount Ikoma region between Osaka and Nara there is even a kind of diviner who tells people's fortunes according to the shape of their navels (Eisei Kurimoto, personal communication). A concern with the navel is indicated also by specialist terms such as debeso, the word for a 'protruding or protuberant navel, hikkonda heso, a sunken or deep navel, and the term hesokuri or hesokurigane (literally 'money wound round the navel'), meaning 'secret savings' (cf. Lebra 1976: 61).

possess the cords of their children, and three of them had been given their own cords by their mothers whereas none of the men possessed their own umbilical cords. Although the sample is very small, the evidence is consistent with a pattern noted by Dr. Halldor Stefansson (personal communication), who found that it is women rather than men who are given their own cords by their mothers, especially at marriage[121]. In Ueno it seems that men are less likely even to know about the existence or location of their own cords, in spite of the fact that hospitals give the cords to the mothers regardless of the sex of the infant. This pattern is further indicated by the replies of a few mothers who have asked whether or not they are likely to give the cord to their child or children in the future: three said they would give the cord to a daughter but not a son, one said she would give it to her children of both sexes and another mother with only a male child said "not unless he asks for it". Another woman with two sons said she would give it to their wives (o-yome-san) when the sons married, not to the sons themselves. Still another mother said she did not know what she would do with it but the question was not asked of all mothers because it is speculative and future behaviour may be different from present attitudes. Even so, it is clear that women are somewhat more likely to receive their own cords than men.

This usually takes place at or around the time of marriage; such was the case for two of the three who possess their own cords, the other woman not being able to recall exactly when she had received hers, saying it was sometime during her twenties[122]. Similarly, two of those who said

---

(121) Dr. Stefansson has conducted fieldwork in a village of Shizuoka prefecture, where he investigated these practices.

(122) She married at the age of 22.

they would give the umbilical cords to their daughters specified that the occasion of the giving would be the daughter's marriage, as did the woman who said she would give her sons' cords to their wives at marriage. However, the prevalent attitude is that the daughters would receive their own umbilical cords when leaving home for marriage into another household (and the adoption of a new surname and set of responsibilities to the husband's family). It therefore symbolises a continuing link with their natal homes. The umbilical cord is a symbol of her own ancestors and of her own background and family even when she formally becomes a member of another household[(123)]. Therefore daughters receive their own umbilical cords but sons rarely do, perhaps because they remain in the same descent group or household (ie) and at some point in their lives may live again with their parents in a 3-generational household. There does not appear to be any difference according to birth order of sons in the small sample represented here, in so far as younger sons forming branch households are not given their own cords in the same way as daughters marrying out; the difference whereby 8 out of 10 women but only 5 out of 11 men had seen their own umbilical cords might not be significant, in so far as a parent showing a cord to one child normally finds those of the other children at the same time so all siblings are shown their own cords simultaneously[(124)].

---

(123) I am indebted to Dr. Halldor Stefansson for this insight.

(124) In one family the normal practice for a daughter to be given her cord but not the son may have been reversed: according to one female informant who did not possess her own cord or seen it, her parents gave her elder brother, the chōnan, his umbilical cord at some time in the past which she could not clearly remember. This is hearsay evidence, the details of which could not be ascertained at first hand during the fieldwork period.

What is important for the present purposes, however, is the attitude expressed by all informants, regardless of sex, that the umbilical cord is a kind of kinen (commemorative object), and is kept simply for the sake of memory (omoide). It is a symbolic reminder of a child's origins and a souvenir of where the infant once was and to whom he or she was once attached. As a reminder to a woman of her natal home it assumes especial importance at the time of marriage and symbolises the continuing biological link even when social links become more attenuated[125], and for a minority this symbolism of memory may be extended beyond the grave.

b) Other kinen of birth

While the umbilical cord is the most widespread kinen of birth, other 'souvenirs' or memorabilia are also common. Most hospitals not only give the mother the child's umbilical cord but also impressions of the infant's hand and foot prints at birth. These are usually inserted into the appropriate spaces in the photo album which in many families is a gift from one of the grandparents; otherwise it is bought by the parents themselves. One family among those interviewed had paid about 20,000 yen each time for a brass casting to be made of the hand and foot prints of both their children which they hung conspicuously, each in a large frame, on the wall of their living room. A few families continue to take impressions of the hand and foot prints of their children on their successive birthdays, at least for a few years, but most are content with only the impressions made at birth.

---

(125) It is relevant in this regard that a woman often returns to her natal home in order to give birth to her children (cf. chapter 4), the matrilocal childbirth reinforcing the matrifocal attitudes of memory involved in the preservation of umbilical cords.

A few families keep the hair from a child's first hair cut, or a few strands of it, and one of these had used the hair to make a calligraphy brush because the hair tapers to a fine point at the end rather than having the flat or jagged tip which is produced when the hair is cut. Some other families which had not had this done knew of the practice, but many others had never heard of this custom, suggesting that it might be limited to the Ueno or Kansai areas.

c) Diaries of a child's development (ikujinikki)

Six out of eleven mothers interviewed kept a diary of a child's development (ikujinikki) in which they wrote down details of their child's height and weight at birth, when he or she first begins to crawl, walk or talk etc. and also a day by day or week by week account of the infant's activities. A typical page from one mother's diary begins 'Today you went to the park and you enjoyed looking at the ducks . . .' and continues in the same vein. How long this persists varies from case to case: one mother kept such a diary for 3 months, after which the photographs taken each month for the first year of the child's life were used as substitutes for the diary; another kept a diary for both her children up to their first birthdays, while another kept a daily account (sometimes a few days written up at the same time) for the first year and then let it become a summary of the week's or, later, month's activities. One mother with children aged 11 and 8 continues to write a combined diary for them both, but especially intended for the elder child, her chōnan, in which she expresses her thoughts about life, comments on newspaper articles which interest her (and are stuck into the diary), hopes and fears and notes on principal events in their family life. She does not write it systematically but only when she feels the need to express herself to her son in this way; however, it is not for her son to read now but is intended for some time in the future, when he is

an adult, when she will give him the diary "in order that he can understand what sort of a person his mother was (or is)".

Others are not so conscientious, but all of the five who said they did not write an ikujinikki reported that they kept some kind of a record of their child's development. Three of them filled in periodic details of the child's height and weight, dates of vaccinations etc. in a booklet given free of charge to all mothers by the town hall (shiyakusho), in which the child's hand and foot prints were also kept. Some who had kept an ikujinikki for the first child could no longer spare the time to do the same once their second child was born so they simply filled in the booklet for the second child. One mother with just one child does not keep an ikujinikki but marks on her calendar when the child first begins to walk etc., while another mother records the same information in the front pages of her son's photograph album. Therefore all keep some kind of a record, but some more conscientiously than others and for varying amounts of time.

d) Personal diaries (nikki)

The keeping of diaries recording events in one's own life is a similar kind of memory-evoking activity, and, like the keeping of ikujinikkis, seems to be more often done by women. All eight men asked about diary keeping practices said they have an appointments diary for work but only three keep a personal diary as a record of recent events. One was a man who writes a kind of ikujinikki for his three school-age children all together in the same volume rather than keeping separate diaries for each child, along with a record of what he himself did on the same days. Though he says he had begun to write his childrens' ikujinikkis even before his first wife's death in a car accident, it appears as if his motivation to continue until now may have been influ-

enced by the fact that she is no longer alive. One of the other men recently began to keep a record with his wife of what they had done during the day but mainly as a "practical" record of their use of time "so that when we think we've been wasting a lot of time we can look back at the diary and see how the time has actually been used". An auxiliary "practical" purpose is as a record of when bills were paid, the car serviced and so on. The other man who keeps a personal diary began it only recently because he thought it would be a good idea to keep a record of family activities: he bought an expensive three-year diary for himself and his wife to write together but in practice his wife now does more of the writing.

Six out of eleven mothers keep a personal diary, two of whom did not write an ikujinikki. In addition, two of those who had filled in the booklet from the town hall instead of writing an ikujinikki said they had kept a diary earlier in life, in their student days or up until marriage, but since having children had discontinued the diaries. Three of those who do keep diaries say they have done so for "many years", and one woman in her early sixties says she has done so for 5 to 6 years, since she retired from her previous employment. For her, the diaries are a means of expressing her inner feelings and thoughts, but because they contain her real thoughts (honne) and "tell no lies" she does not want any others to see the diaries and she wants them to be burnt with her when she dies. She often consults the volumes for the previous years and calls them a "wonderful record" (subarashii kiroku) of past events. Similarly, a younger woman keeps all her old diaries and once a year, at New Year, she looks back at them and thinks about the past. For such women the diaries are private records of past memories consulted at periodic intervals, and can also be a form

of self-expression denied to many women in their regular lives because of various social inhibitions about expressing one's own inner thoughts publicly (cf. Lebra 1976: 29-30, 125)[126]. The woman mentioned earlier who writes a diary to be given one day to her son has developed a kind of literary form which is a cross between an ikujinikki, a personal diary and a commentary on daily life and events in her family circle, local neighbourhood and society at large.

In this she is following in a tradition of female diaryists begun in the same part of Japan some ten centuries previously by one of the ladies-in-waiting at the Imperial Palace in Kyoto, Lady Murasaki Shikibu. Her 'Tale of Genji' is sometimes considered to be the oldest novel in the world (Keene 1971: 33), but her diary reveals many of her more private opinions and thoughts. Even this, like the earlier Kagurō Nikki (an autobiographical diary covering the period from 954 to 974, written by the wife of the Prime Minister of the time) is principally concerned with the personal feelings of the author rather than with the political life of her husband, but such diaries written by women of the Heian era set a literary pattern which persisted through the following centuries and has many descendants today among the ordinary people of Japan. Men also wrote famous diaries, starting with the Tosa Diary of 935 or 936 and continuing into the Edo period with the travelogue diaries of the poets Matsuo Bashō (1644-1694) and Kobayashi Issa (1763-1827) (Yuasa 1983; Ueda 1983; Keene 1971: 31 ff.; Janeira 1970: 75, 81-3; Kimura 1983). Their modern counterparts include not only literary diaries but also the 'I' novels which came into vogue during the

---

(126) Lebra (1976: 124) notes also that diaries, or parts of them, may be sent to someone else as messages, so that 'diary exchange is not an unusual form of courtship'. It can also be used in some psychotherapy (ibid. p. 229).

twentieth century (Nakamura 1969: 11, 66-8, 130-131). More important anthropologically, but less obvious in the historical materials, are the many diaries and account books kept by ordinary farmers from the Edo period onwards (T.C. Smith 1959: 84-5, 88-92; 95, 119, 158 note a, 159 note c, 178-9 etc.); similarly, the diaries of some Aoyama and Sakurano housewives developed out of the keeping of household account books (kakeibo).

Nevertheless, it is still the female diaryists of the tenth to fourteenth centuries, especially the more famous tenth and eleventh century diaryists, who provide the closest parallel stylistically to some of the diaries written by women today, in so far as they 'wrote for themselves, or, at most, for . . . the court, their friends, and their living critics. They followed the general custom of diary-writing' and 'never imagined that we would read or write about them today'. They seem to have written mainly for their own pleasure, sometimes as a means for consolation when their husbands are unfaithful (Janeira 1970: 88). Even if the Japanese diaries differ from Western ones in terms of the former not disclosing some facts of their intimate lives (ibid.), in a society where women are often unable to express their inner feelings verbally the written form of a personal diary provides such an outlet for personal expression.

The form adopted nevertheless is that of reminiscence, memory and reflection on one's inner thoughts chronicled at a later point in time (cf. Kimura 1983). As such the diary as a literary genre fits closely with the importance attached to memories and omoide. Janeira remarks that 'the diary is so much to Japanese taste that their number today is

uncountable' (1970: 75)[127], and Benedict (1946: 274) calls diary writing a 'Japanese obsession'. Such an 'obsession' is perhaps particularly suited to a culture where 'memory' in a manifold number of forms appears to be an underlying motivation for a variety of behaviours, though various social constraints on expression and other circumstances[128] have led to the genre being favoured particularly by women.

e) Photographs

The image of the camera-clicking Japanese tourist has become so familiar that the cultural significance of photographs tends to become overlooked. Several Japanese men say they normally use up a roll of film in about six to eight weeks on 'normal' household activities, partly because they take photographs of occasions when they invite special guests to their homes or do other activities with such visitors, often taking two or three virtually identical snaps in order to give their visitor a copy afterwards. The photographs are given or sent to the guest later as a 'memento' (kinen) of the occasion, even if it was little more than a meal together at home, when the snap may be of the group eating together - a memento of commensality and its significance for social relationships.

Outings as a group involve rather formal photographs of the members standing fairly stiffly in a row (or rows) and the background

---

(127) One of these, a diary written by a journalist working as a temporary worker for Toyota, has recently been translated into English under the title 'Japan in the passing lane' (Kamata 1982).

(128) These 'other circumstances' are largely connected with the prestige given to the Chinese language during the Heian era, so that men tended to write imitations of Chinese literature which left the field of literary expression in the vernacular more open to women at the court who were not expected to learn Chinese (Keene 1971: 28-9).

is not usually the beautiful countryside which they visited but more often the name board of the station where they alighted or the door and name plaque of the hotel where they stayed. These 'markers' are symbolic of the whole trip and are not intended so much to evoke memories of the scenery but rather of what it felt like to arrive at the place and to be there as a group with these people[129]. Such photographs can stir emotions more than pictures of the scenery because they evoke sentiments related to the people rather than the place (cf. also Graburn 1983: 49-50)[130].

Photograph albums are kept of family events (often beginning with photographs showing a newborn infant feeding at the mother's breast or having a bath with his or her grandmother), which many families say they look at together at least once a year (at New Year), not uncommonly four to six times a year or "when relatives come (from distant areas such as Kyushu)". At such times all the albums are looked at, not only the ones of recent events.

In this context it is relevant to note the attitudes of many people to the 7-5-3 ceremony held at Shinto shrines in November when girls aged 7 or 3 and boys aged 5 are (usually) dressed up in special kimono (for the girls) or smart clothes (for the boys) and taken to a Shinto shrine. There they sit with their parents while a priest recites prayers and performs a ritual purification over them, many of the younger children becoming quite restless while the older children are more interested to see what is happening. Afterwards all families take photographs

---

(129) I am grateful to Patrick McElligott (personal communication) for his insights on these matters.

(130) With the making of personal video films becoming an increasingly popular hobby, it remains to be seen what kinds of emphases come out on these.

of the children in the precincts of the shrine.

Those with children who had been through this rite were asked whether they thought it had any influence on the children and how important they considered the ceremony to be[131]. Answers to these two questions were usually almost identical for any particular informant and fell into the following categories:

Table 3. Attitudes to the 7-5-3 ceremony

It has "some" religious meaning, if only because it takes place in a shrine:	5 people
Important for its own sake to preserve the custom for the next generation:	3 people
Not important at all:	16 people
The only importance is in the taking of photographs:	17 people
Important "only as a memory":	1 person

These references to the taking of commemorative photographs (kinen shashin) all came spontaneously without any prompting, and, coupled with the man who referred to "memory" rather than photographs 'per se' account for 18 of the 42 people questioned on the matter. It is not unlikely that the 16 who replied "not important at all", thinking in 'religious' terms, may have also said that only the photographs were important for them if they had been questioned more closely. In either case, the many spontaneous references to photographs given by a substantial number of people testifies to their importance on a 'practical' level.

(131) These replies are all from the first period of fieldwork; the questions were not normally asked in the second set of interviews.

The reasons for the photographs' importance were given as "evoking nostalgia" by three people - in one case the parent's nostalgia for her native village and in the other cases the children's nostalgia for the event when they grow older and see the pictures. Three compared the event to birthday celebrations and one said it gave the children a "sense of identity". However, the majority saw it as primarily for the benefit of the children's memories and often saw the photographs as "proof" to the children of their parents' love for them. This idea was expressed in similar words by a variety of parents, especially mothers: "One day my children will say 'My parents did this for me' and will be glad it was done for them", "the photos are to show the children they are loved very much", or "the photographs provide some proof which the children can see of how much we love them". The 'proof' comes not only through the parents buying the expensive clothes for the children and paying 5,000 yen or so to have the ceremony performed but more particularly through the ritual 'replay' of the memories year by year when the children look through the photograph albums: - such ritual 'replay' or 're-enactment' of an event in order to evoke memories in Japan takes the form of looking at photos but in other cultures may involve rituals acted out in tangible forms[132].

---

(132) Parallels to this in the religious life of other cultures include the Jewish Passover feast (Exodus 13: 1-16, especially verses 9, 14 and 16) and, growing out of this, the Christian Communion service (or Lord's Supper etc.): cf. 1 Corinthians 11: 24-25, and the meaning of this as a 'proof' of love in 1 John 4: 9, 10. The rite serves to evoke memories not only of the death of Christ but also of His Resurrection (the wine also symbolising joy as well as its usual interpretation): cf. Matthew 26: 29; Luke 24: 28-35; Acts 10: 40-41; John 6: 26-67, expecially verses 35-40, 43-51 and 53-58. Note also the words 'until He comes' in 1 Cor. 11: 26.

f) Miscellaneous memories

The importance attached to 'memory' manifests itself in many other forms which are often individualistic in their character even if the sentiments are very widespread. Some examples include:

i) The safety charm given to a Japanese anthropology student by his mother when he came to study in England: it consisted of an embroidered pouch containing sand from the grave of the student's father (rather than the standard type of charms bought at shrines) and the student treasured it because of its evocation of memories of his father.

ii) Several of those interviewed in Ueno said that various other types of charms around the house were kept more as mementoes of the person from whom they received the charms than for the sake of the charms themselves. This extended in some cases to items which are normally peripheral to the charm, such as one family keeping the paper wrapping in which a charm had been wrapped even after the charm itself had been returned to a shrine after use[133], because the wrapper reminded the man of his mother who had given them the charm but had died while they had the charm in their possession.

iii) A Nissei kachō living in Sakurano keeps with him in his wallet wherever he goes a photograph of his deceased father because, he says, "it means my father is with me all the time". It is not dissimilar to a safety charm but he feels he has no need for a formal safety charm because he prays each day at his Kamidana and Butsudan, sometimes also in the morning going to pray at the company's shrine on Sakurano hill. He says he would not worry if

(133) They are often said to be 'valid' for one year only, after which they need to be returned to the shrine and replaced by a new charm.

he were to lose the photo of his father - "it would be just a great pity" - and he has a similar attitude to his watch which his father-in-law gave to him: both are mementoes of these people.

iv) The widespread practice of giving 'souvenirs' (o-miyage) is related to this. Japanese tourists are well known for buying souvenirs for family and friends when they go abroad, and even within Japan they may buy local specialist products as such souvenirs (Graburn 1983: 47-8). Often they are useful or unusual goods to bring as visiting gifts, for which the identical term o-miyage is used, but many people do keep the souvenirs as souvenirs in their own homes, younger people often in their bedrooms and older people in their living rooms: for example, one shataku apartment has a glass cabinet in its living room full of statues and batik-work from Indonesia, which the husband had often sent home to his wife during the three years he was posted there. Outside many houses in Ueno there are stylised pottery models of badgers/raccoons (tanuki) which have been bought by those going to a pottery village in Shiga prefecture either for themselves or as gifts for others; bowls, mugs and other items from this village are also popular presents(134). Very often the 'souvenirs' brought back by those going to other parts of Japan consist of local types of charms such as stone frogs or Daruma

(134) These badgers are very popular in this region of Japan and have contributed greatly to the prosperity of this pottery village. Moeran, who studied a pottery village in Kyushu, seems unaware of the economic potential of badger production when he records a conversation between an urban dealer and a local potter, the dealer urging the potter to begin the manufacture of badgers in Kyushu too (1984: 265, note 4); it might be that Moeran's interpretation of the conversation would have been different if he had appreciated the popularity of pottery badgers in the Kansai region.

dolls[135], the purchase of which combines the themes of 'memory' and of 'safety', (another 'key theme' in Japan, as will be discussed in chapter 6).

v) Other items which are not bought as 'souvenirs' may be kept as 'mementoes' (kinen). Among Ueno residents items described as being kept for their 'memento' value include the sash (hara-obi) worn during the second half of pregnancy (kept by a woman with 3 children who is not planning to have any more), the safe childbirth (anzan) talisman (fuda) used when a child was born 5 years previously, a piece of calligraphy done by a former prefectural governor, now dead, who was a friend of the informant's father, and pens or notebooks given by the local city council to all those aged 20 in the city who attend a meeting at the town hall on 'Adult's Day' (15th January), these mementoes sometimes being kept for many years afterwards.

vi) Two girls who graduated from the same university in Kyoto and who both now work at the same place in Osaka had to go to Kyoto for an afternoon appointment: they decided to spend the morning in the city not at one of the many places of interest but rather walking around their old university campus (not going to greet any of the staff) and having lunch at a café they frequented in their student days - all for the sake of omoide (memory).

---

(135) These are armless and legless dolls supposed to represent the founder of Zen Buddhism in China (Bodhidharma, known in Japanese as Bodai Daruma or Daruma). The dolls are used now as charms for the fulfillment of some special wish or request (cf. Inokuchi 1983b).

vii) 'When the World War II survivor, Sergeant Yokoi, was rescued from the Philippine jungle in 1973, he was reduced literally to a handful of possessions, and the umbilical cord that was given him by his mother on his departure for the war was one of them' (Lock 1980: 73). When this quotation was shown to Dr. Satō of Aoyama, his immediate reaction and comment to his wife was "mamori mitai" - the umbilical cord in this case is "like a safety charm". Whatever its functions to Sergeant Yokoi, it is significant that he should have kept this as a treasured possession.

viii) The reasons Dr. Satō gives for choosing to live in Aoyama include both 'practical' ones, such as the cost of building land being cheaper than in Kyoto, and 'aesthetic' ones concerning the frogs in the rice valley below and how he loves watching the fire-flies in the valley from the vantage of his house on a summer's evening. The second reason appears at first to be a minor consideration, even when one knows that in Japan frogs are said to 'sing' rather than 'croak', until Dr. Satō explains how as a child he enjoyed going to a house his father had rented on the outskirts of Kyoto where for the first time in his life he heard the croaking of frogs and watched the rice being planted. His choice of a house site now is therefore consistent with the feelings of nostalgia and 'memory' which are widespread in other aspects of Japanese life, and this wider context makes his second reason not as trivial as it may seem.

ix) The idea of one's 'native village' (furusato - often used to mean one's 'place of origin', whether rural or urban) normally tends to evoke fond, nostalgic memories, as mentioned earlier in connection with the taking of photographs of the 7-5-3 ceremony. Spae (1971: 76)

writes that 'the Japanese grow very attached to the places where they were born and have lived, to the countryside, and to their native soil . . . .', and from the frequency with which the word furusato appears to be used in conversation and literature, this perhaps should be added to the list of key words. A synonym for furusato (故里) is kokyō (故郷), used less frequently because it is rather more literary than furusato. One of the words for 'nostalgia', kaikyō, is used particularly for feelings related to one's furusato. Similarly, another synonym for nostalgia, kyōshū, is formed of the character for 'rural area' 郷 (136) plus one for 'nostalgic gloomy thoughts' 愁 (137) (meaning the same as natsukashii or omoide), the compound indicating that the nostalgia or memories is directed particularly to the rural area (which one came from). The difference between kyōshū and natsukashii is summarised by Graburn (1983: 63), who writes 'Japan enjoys a special concept of nostalgia, kyōshū, a nostalgic dreaming of the homeland, or natsukashii, a somewhat sad longing for an ideal harmonious context, often placed in the personal or historic past'.

g) The common roots of Shinto and Buddhism

Spae (1971: 76) continues his comments on the importance of the furusato and the Japanese attachment to their native soil by noting that 'all these familiar things and places become personified. Through a projection of one's affections, nature seems to return one's love. A profound and beneficial empathy sets in between man and his surroundings . . . . These surroundings take on the shape of the numinous; they are

---

(136) The same kyō as in kokyō, native place.

(137) The character is formed from the character for 'autumn' placed over the one for 'heart', the combination itself suggesting nostalgic thoughts.

worshipped and . . . . by a mysterious osmosis they put him in touch with the divine'.

If these observations (or intuitions perhaps) are valid, they suggest that the concepts of furusato, memory, nostalgia and omoide take on a new meaning or are transformed into what is normally thought of as 'Shinto'. The personification of natural features such as mountains, trees or rocks is associated with Shinto rather than Buddhist thought, but this investigation into the spheres of memory, nostalgia and their related concepts like those of furusato began with an examination of the ancestral cult which is normally associated with Buddhism. On the way reference has been made to customs such as the keeping of umbilical cords which also point back to the past, to the ancestors, to one's 'roots', by 'demonstrating'(138) the connection between the generations in a tangible way. At the end one returns to the village, to the native soil to which the Japanese themselves ritually return at Bon and Higan to meet the ancestors who return to the place they have known throughout life(139). There the generations meet together in a 'reunion', in the place of the ancestors and also the place where the trees and hills 'take on the shape of the numinous', 'are worshipped' and put the inhabitants 'in touch with the divine'. At the furusato Shinto and Buddhism merge. Both may be seen as in some sense manifestations of the sense of attachment to one's native soil and of the

---

(138) See the comments quoted earlier that the umbilical cord is a "proof" that the mother and child were once connected. Similarly, the photographs of 7-5-3 ceremonies are sometimes said to 'demonstrate' or 'prove' the parents' love and so continue the record of the past begun at birth and the keeping of the umbilical cord and writing of ikujinikkis.

(139) They are normally said to return at Bon, but one informant applied the idea to Higan too.

underlying 'motivation' of 'memory' and 'nostalgia'. We have come full circle to where we started, seeing that Shinto and Buddhism are two sides of the same coin, a coin minted with an alloy containing at least some elements of 'memory'.

Conclusions

Ancestral rites in Japan are manifested in a wide variety of forms, including both 'classical ancestor worship' and the use of 'substitute Butsudans' in what Morioka (1984: 201, 208) calls 'modified ancestor worship'. A minority of families worship in Shinto forms but many do not possess any household altars because they do not yet have a need to do so. Those who do perform ancestral rites do so thinking primarily of those they had known personally - 'the departed' - and this group may also include kin not normally considered to be 'ancestors' (Plath 1964: 301; Morioka 1984: 206). It is the concept of 'memory' which identifies 'the departed' as a special group, and it is the 'motivation' of memory which is involved, according to the participants themselves, in the rites performed as if to 'ancestors' by the 17% to 20% of the sample who perform the rites while denying any belief in an afterlife. The importance attached to memorialism in Japan is indicated also by a wide range of other, non-religious practices such as the keeping of diaries, taking of photographs or preservation of a child's umbilical cord. In all these ways 'memory' emerges as an underlying 'motivation' for many diverse kinds of behaviour, which encompasses both Buddhism and some aspects of Shinto (such as attitudes to the 7.5.3 rite). However, for the most part 'memory' is linked with Buddhist rites whereas another 'key theme' complementary to that of 'memory', namely the theme of 'age', is found manifested in many Shinto rites.

CHAPTER 4

Age

The structure of the human life-cycle inevitably imposes distinctions by age in every culture: one generation teaches, encourages, disciplines and guides the next, who in turn do the same for the following generation while their own parents reach retirement age. Sex, age and generation may be taken as three criteria for social distinctions which are inevitable in any society(1), but the latter can merge into each other to some extent, depending upon the social and demographic structure of a society(2).

Social structure, by which is meant in the present context principally the division of labour in the economic, political and kinship fields, is likely to be affected by and to affect the types of 'motivations' stressed by a particular social group, but in the present context two assumptions are made about the nature of this relationship:

a) 'Motivations' are longer-lasting than 'moods' both on an individual and a societal level, by which it is assumed that basic 'motivations' (which here overlap with concepts such as 'cultural values' or even 'culture') change much less rapidly than surface changes in the 'moods' of society and of social institutions.

(1) By 'inevitable' is meant the fact that adults do assume certain responsibilities vis-à-vis children which children are unable to perform for themselves, and it is still the women who bear and breastfeed the children.

(2) 'Age' and 'generation' are likely to be more distinguished in societies with institutions such as age-grades or kinship terminology which is applied to all members of a particular generation or age-group, than in those societies lacking such institutions.

b) If 'motivations' are to be revealed, however imperfectly, through a study of attitudes, and thereby of 'values' to at least some extent (in seeking to determine what values are highly regarded in a society and become 'motivators' for behaviour) then some 'motivations' are likely to be manifested in 'religious' forms by some kinds of beliefs or attitudes which emphasise these basic values.

The problem then arises of discerning those values which are 'motivations' and those which are generated by the particula 'moods' of a society at any one time, and the test of this is probably that of time where historical evidence is available. On this basis values and attitudes associated with sexual roles in Japan seem to be more mutable than those relating to age (or generational) hierarchies; in traditional rural Japan women did enjoy considerable freedoms concerning the choice of marriage partner, their ability to work as wage labourers or engage in other economic pursuits, choices about family size and even, in earlier periods, their influence in political activity, as manifested especially in shamanesses called miko (Hanley and Yamamura 1977: 111, 187, 233-252, 254-5; Hendry 1981: 23-4; Befu 1971: 48-9; T.C. Smith 1959: 166; Blacker 1975: 104, 110f. and also D.C. Lewis 1980, chapter 6). The subsequent erosion of some of those freedoms came largely as a result of a 'samurization' process in the nineteenth century whereby elitist practices such as 'arranged marriages' became more popular (cf. Befu 1971: 50; Hendry 1981: 24-5). On a religious level, taboos concerning women appear to be predominantly a result of purity and pollution concepts regarding the polluting character of blood, so that women were often prohibited from entering

Shinto shrines at the time of menstruation or childbirth (cf. Segawa 1963; Bownas 1963: 61), a taboo which is rarely even known about among Japanese women today. Since purity and pollution concepts are more widely diffused in Japanese society (even if some of their manifestations may alter, as in the above example) and have a long, deep-rooted history in Japan, it is feasible to assume that they can be regarded as on the level of 'motivations' while sexual differentiation lies at a level closer to the 'surface' of society. For these reasons the chapter on sexual differences is assigned to Part 3 of the present work, but, by contrast, 'age' appears to be a more deeply rooted value which is probably a 'motivation'. The same two arguments can be used to justify this:

a) Status differences based on age appear to have had a long history in Japan, as formalised through age grading and related practices, and even if some of these formal age groups are no longer viable in many villages (often through demographic pressures from younger people migrating to the cities) a general association between age and status still remains strong, as manifested in various behavioural and linguistic forms (cf. Norbeck 1953, 382-3) although formal status still takes precedence over age (Nakane 1970: 32 and footnote).

b) In the 'religious' sphere there are widespread beliefs regarding certain ages in the life-cycle - 'calamitous years' (yakudoshi) when misfortune is thought to be more likely to afflict someone - and these (unlike religious ideas connected with women) do not appear to be directly attributable to other 'motivations' such as purity and pollution or memory. Rather, 'age' itself is emphasised culturally in both 'religious' and 'non-religious' forms. The latter will be

dealt with first, although considerations of space necessitate the discussion to be partly a summary of the findings of others (since the Japanese use of age hierarchies is widely recognised) supplemented by local data from Ueno before going on to present more fully some of the data on the 'religious' manifestations of this concern with age which were obtained from fieldwork in Ueno. At this level there is rather less 'local colour' than in the analysis of memorial rites because the concern with 'calamitous years' shows no major differences between Sakurano and Aoyama except in so far as the Sakurano population is generally younger so fewer have experienced a major 'calamitous year' personally. The discussion is therefore more widely on 'age' in 'Japanese society' generally, a usage which does not assume that 'Japanese society' itself is undifferentiated (or that some of the models of it such as that of Nakane (1970) are valid in all areas), but which does assume that the underlying 'motivations' connected with age are more generally constant than class, regional or occupational differences.

The emphasis on age in non-religious contexts.

Studies of rural Japan show how systems of age-grading have been widespread up until the recent past and have often survived to the present in a more attenuated form (cf. Beardsley, Hall and Ward 1959: 288-290, 311-312; Norbeck 1953: 373-384). Although such age grades are less conspicuous, or formally absent, in urban areas, relative age has continued to exert a considerable influence upon status hierarchies. In the local middle school in Nishiyama, the behavioural patterns required of those of only one year's difference in

age (or school year) can be clearly observed when the girls play tennis: the first years can only stand around the edge and watch, but the second years are allowed to pick up any ball which leaves the court and, after bowing to one of the players, can throw it back to her; the third years play tennis (cf. also Nakane 1970: 34).

Such behaviour is one illustration of a more general age ranking into seniors (senpai) and juniors (kōhai) in Japanese society at large (Nakane 1970: 26, 59, 129), plus a relatively small residual category of 'equals' (dōryō). Although senpai-kōhai terms may be used in a general sense for all those older or younger than oneself in an organisation, usually they refer to people of the same sex with whom one has continuing, frequent interaction. In the Nissei factory such relations are found among men of the same section (or department), the kachō (or buchō) often being an institutionalised senpai who in theory may bestow favours on kōhai in return for their loyalty to him, but in practice such relationships tend to be stronger in certain sections or departments than in others(3) and to be cross-cut by other senpai-kōhai relationships formed through links such as graduation from the same school or college. In each case the senpai is an older person who may help out or encourage the younger person with little direct reward expected, although there are indirect rewards from the building up of a loyal cohort of kōhai if, for example, the senpai has hopes for nomination to a union post or similar position.

Senpai-kōhai relations between a kachō and his staff within the same section are reinforced at periodic intervals

(3) It appears as if there is greater scope for favours from above and loyalty from below in the production departments (where certain production targets need to be met) than in administrative departments.

by recreational activities such as going for a drink together after work or going on a weekend trip together. Nissei owns or has permanent contracts with several traditional style hotels (ryōkan), mostly scattered throughout the region between Tokyo and Kyoto, where Nissei families can enjoy subsidised accommodation for their holidays, and where the men of a particular section can spend a weekend together, without their families, engaging in sports such as ski-ing, hiking, fishing or swimming. Such trips occur about once every three months for each section, one for each season of the year. Some kachō also organise other activities for their section, such as one man who each year on the 2nd or 3rd of January invites all the eleven men under him to spend the day playing mah-jong together at the kachō's home, his wife providing the meals and drinks for the men from lunchtime until they leave late at night(4).

On a more general level and outside of Nissei, there is a generalised sense of propriety or etiquette which inhibits juniors from expressing directly an opinion at variance with a senior in the latter's presence. Either they remain silent or else voice their opinions in a circuitous manner. This can lead to quite different types of behaviour in different circumstances, as illustrated by a man who is normally very relaxed and informal, readily responding to jokes, when visiting the anthropologist's home but who becomes very quiet and formal if his boss at work visits at the same time so that the older man is left to do most of the talking (cf. also Nakane 1970: 35-7).

(4) Rohlen (1974: 128) notes how in the firm he studied a senpai's marriage may suffer if he continues to promote relations with kōhai, and this seems to be the case with this man, who is often away from home for 14 to 16 hours daily and spends many weekends playing baseball for his firm.

Among neighbours in Aoyama[5] a woman in her twenties or thirties accepts graciously the unsolicited advice of a woman in her fifties and thanks the latter politely for the advice even if it is none of the latter's business; whether or not the younger woman acts upon the other's advice is another matter. If she thinks the older woman is too interfering she may cease to invite the latter into her home and begin to talk with her only in the entrance way (genkan) or in the street.

These distinctions apply when there is a clearly noticeable difference in age, of at least ten years, so that the difference approaches that of a generational difference. In these same contexts more formal language is used by the junior to the seniors, involving differences in vocabulary and grammatical forms as compared to 'standard' speech. Such formal, honorific language (keigo) may be used with strangers of a similar age to oneself when first introduced, after which it might be dropped as the two become better acquainted[6].

However, all old people of the grandparental generation, including those with no genealogical relationship at all to the speaker, are addressed by the terms of respect o-jiisan ('grandfather') for males and o-baasan ('grandmother') for females, indicative of their being viewed still as a distinctive age group in which generalized kinship terminology is appropriate.

---

(5) To a lesser extent in Sakurano because age differences among neighbours, especially in the same apartment block, are much less marked.

(6) However, if the two do not see each other for several months or more and meet again they may begin again using keigo because they are no longer so 'close' as before. Among very close friends who have known each other for several years personal names might be adopted instead of surnames, but such friendships are relatively rare.

In some firms juniors give their senpai gifts at the end of the year (seibo) or at Bon (chūgen), often consisting of special presentation packs containing food (ten tins of meat, for example), drinks or, more recently, soap. Gifts of a personalized nature relating to an individual's hobbies or tastes are not normally given (cf. Befu 1974: 211). It is Nissei policy for such gifts to be forbidden within the firm, but shataku residents still give such presents to people such as their children's piano teacher or those who give private coaching after school. In Aoyama, doctors, dentists and University teachers receive such gifts from patients or students, the latter including some former graduate students who continue to feel a debt or obligation to their former teacher. The clients of doctors and dentists express their gratitude through such gifts and hope for preferential treatment in the future(7). Such gift-giving originated in rural areas as gifts from socially lower to socially higher individuals (such as a tenant farmer to a landlord, according to Befu (1974: 214-5) but in the cities often has a kind of 'social insurance' function whereby attention to proper etiquette facilitates the likelihood of being able to receive help from one's neighbours if necessary (Dore 1958: 258-262). However, in

(7) Among both Aoyama and Sakurano residents combined, 10% of 543 respondents reckon they give at least 10% (sometimes up to 30%) of their income on gifts to acquaintances outside the family as seibo, chūgen or ndyage ('souvenirs') etc. The majority give between 1% and 10%, while 10.6% use ½% or less of their income for such payments. By contrast, 48.6% of respondents say they give nothing at all to charitable causes; 68.8% give no more than 0.1% of their income to charity. (Gifts to religious bodies are also included in these percentages for charitable donations.)

almost all cases the gifts are given by younger people to older people: this is normally the case in the pupil-teacher relations and in the junior-senior relations in factories where such practices continue. Exceptions to this generalisation are gifts to doctors or dentists who may be younger than the donor, but as skill in the other situations is normally commensurate with age, the doctor's skill is being regarded as if it were that of an older person by the more general principles. In Japan "sensei" - 'teacher' - is a general term of respect for any teacher but is often applied to professional people too (Nakane 1970: 27). Traditional styles of teaching involve an experienced older person teaching a younger person arts such as flower-arranging, the tea ceremony, judo and so on, so greater age is still normally implied by the term "sensei". The other exceptional cases are those in which a parent gives a gift to a child's piano teacher or to the warden of a hostel where the donor's daughter has been living while at university, the warden or landlady in such cases often acting as an unofficial chaperone or guardian. In such cases an older person may give a gift to a younger one, but these are in effect vicarious gifts on behalf of the person's child and as such correspond to the general principle that these gifts are given 'upwards' from junior to senior, from the younger to the older generation. As such they manifest an implicit recognition of the age differences as well as of the more explicit status and skill differences.

In organisations such as Nissei age gradations are usually absorbed into the hierarchy based on length of service, both these factors being taken into account in the assessment of

wages (cf. Cole 1971: 76, 78, 84-88; Dore 1973: 98ff.; Clark 1979: 114-119). At Hitachi a person's year of entry into the firm is indicated by his or her uniform number (Dore 1973: 24), and though this is not the case at Nissei all Nissei employees have a badge indicating their section and status in the company, one component in the attainment of their ranks being age, or length of service. Their speed of promotion and their likelihood of reaching managerial positions depends largely on education and partly on personality or suitability, but the educational component is differentiated according to the prestige of the university: all five at buchō level sampled by the questionnaire had been to one of the two top universities in Japan (Tokyo or Kyoto), as had another buchō questioned independently(9); graduates from there and other prestigious universities also account for a considerable proportion of the kachō class at Nissei(9).

When an age cohort enters the company they receive their training and orientation together as a group (cf. Dore 1973: 46-53, 60-67; Rohlen 1974: 63-73, 192-207) but in large firms like Nissei may then be dispersed among several factories. However, in both larger and smaller firms those who underwent training together continue to relate to each other as a clearly defined group and are seen as such by others (cf. Cole 1971: 149-150). At Nissei there is an expectancy that each age

(8) Mr. Ōkura, the General Affairs Manager, who was very helpful regarding the research on company rites described in chapter 12.

(9) Many simply wrote 'university' without specifying the name but all those who did supply the name (about one third of the kachōs)had all been to prestigious universities.

cohort will be promoted to a particular rank after a certain length of service: no one is promoted significantly ahead of the expected time but others may be promoted later than average or given positions with rank but little responsibility or power[10] (cf. Clark 1979: 119-125). In this general way age or length of service continues to be a major determinant of status ranking in the factory, but gradually differences in education and ability manifest themselves in the speed and direction of promotions for certain individuals, leading to a weakening of the correlation between age and rank at the higher managerial levels of the firm[11].

At the neighbourhood level there is also a clear awareness of age, in both relative and absolute terms, among friends and neighbours. Sakurano residents discussing other Nissei employees often refer to the person's age in quite specific terms, saying, for example, "He's now 42, so most likely he'll be moving out of the shataku before too long" or "Mr. Kurimoto is three years older than my husband so his income would be a little more"[12].

Aoyama men have rather less social interaction with each other, except for those employed by the same firm, so are

---

(10) Dore calls this 'kicking upstairs' - cf. Dore 1973: 68-9, 102 .

(11) Men tend to follow a career pattern within a general sphere such as 'production/technical' or 'finance/administrative' and one of the reasons for their being moved from plant to plant is the availability of posts in various plants when men are due for promotion. They are given two weeks' notice about their transfer, the announcements being made on or around the 1st and 15th of each month regarding who will be transferred in two weeks' time.

(12) It is clear from the content of such comments that small differences in rank or income can become foci of jealousies or friction among shataku households.

generally content to assess another's age by appearance alone. Their wives, however, use appearance as a general criterion to determine whether and to what extent they should continue to adopt respectful forms of language and behaviour, but when more specific information is desired they can resort to a variety of devices to obtain the information. Although some are less apt than others to refer to the age of other people in general conversation (as contrasted with the shataku comments cited above), they are able to supply the anthropologist with details of the ages of their friends which when checked against these people's ages reported on the questionnaire turn out to be accurate to within a year or two at most. Such information is most accurate for those born within a decade of each other because it is among such people that smaller age differences may become more important whereas the ages of those more than ten years older or younger than the informant are known in more approximate terms (within five years) because their relative ages are well established already from appearances. Some of the means for estimating such approximate ages come from clues in conversation such as comments about what kind of school they were attending during the war period, what kinds of popular songs the other can remember (which can be dated to the 'fifties' or 'sixties'[13] eras when they were in vogue) or, to some extent, styles of dress, particularly if they are observed at New Year or other formal occasions wearing a kimono, the colouring and style of which should in theory be suited to the woman's age (Lebra 1976: 79).

---

(13) The Japanese equivalent terms are in fact 'the twenties', 'thirties' or 'forties' because they normally speak in terms of the year of the Emperor's reign, the present reign beginning in 1926 as 'Shōwa one', so that 1984 is 'Shōwa 59', Shōwa being the era-title of the present Emperor's reign.

When more specific information is desired, however, it is impolite to ask the person directly. For a few individuals, such as representatives of the local jichikai that year, the person's age is printed in the local bulletin detailing the officers and their responsibilities. Similarly, those who have been interviewed in the press usually have their ages published at the end of the article, the reporter asking the person's age directly if by the end of the interview he has been unable to ascertain it by other means, so that the ages of well-known local people are widely known.

Another much more common but indirect means of ascertaining another person's age is by asking him or her which year of the Chinese twelve-year cycle he or she was born in (14): "(Anata wa) nani dosni umare desu ka?" From the other's reply that she or he was born in the year of the tiger, monkey, dog or whatever, the questioner can deduce the other's age, knowing from observation of the other's approximate age in which of the twelve-year cycles the birth year would have occurred. However, the overt purpose of the question is to find out about the other person's character, there being a widespread idea that a person takes after the character of the animal for his or her birth year. The questioner then makes a polite comment about one of the good traits in that animal, such as the sheep being gentle and good-tempered (otonashii), the mouse being 'economical' by hoarding things or the wild boar keeping straight on its path without turning

(14) This is the principal method used but it is inapplicable to foreigners, so often foreigners are asked directly how old they are, whereas such a direct question is rarely used among Japanese except out of necessity by journalists or by some people when talking to children (but even then usually asking the child's school year rather than age.

aside. Although the questioner may say, for example, "In that case you must be a very patient or persevering (nebaritsuyoi) person" to someone born in the year of the cow, stressing the 'good' qualities, she also knows the 'bad' qualities of that animal, such as the cow being stubborn and refusing to move if it sits down on the road - but such 'bad' qualities are not mentioned in conversation with the relevant person.

Among the small number of people questioned in the second period of fieldwork about their attitudes to this belief, it was found that five out of nine men expressed a belief, four of them giving specific examples of people they thought 'fitted' their animal years of birth, whereas only two out of nine women expressed a belief, neither of them with specific examples, while five women expressed a disbelief, all of them giving examples of how the correlation did not fit specific people. It might be that women are more sceptical about the correlation between animal years and personality even though it appears that they use the ideas to elucidate another's age more frequently than do men. However, any such trend (which requires verification) is at variance with statistics on other types of 'religious' practices which often indicate that women have a higher propensity to practise and to profess a belief in 'religious' matters than do men (see chapter 10). For such reasons these indications are questionable in quantitative terms, but the present concern is more with the qualitative nature of attitudes.

A few informants asserted that they consider the correlation between animal years and personality to 'hit the

mark' (ataru) or 'fit' (atehameru) in a general way, without giving specific examples, but most people's replies generalised from a few specific instances to a wider conclusion about whether or not the correlation seems to hold. Usually these specific cases involve themselves, their spouses or their parents (but not usually their children except once as an afterthought). In this regard there is a clear difference between male and female attitudes, in so far as the men always gave their specific examples about themselves: four of these five selected a'good' quality about the animal and applied it to themselves, asserting that it "fits", whereas the fifth simply said that he was born in the year of the monkey but there is "no connection". The women, however, tend to refer to other people - their husbands or parents - and generalise from these examples whether or not there is a connection. Examples of these attitudes are as follows:

Male

"I eat anything, like a mouse!"

"The tiger is bold and daring ..." (the implied "like me" being omitted!)

"The tiger is active - so I think it fits."

Female

"My husband and father were both born in years of the mouse but their personalities are very different."

"I don't know ... . The one person I know whom it did seem to fit was my mother: she was born in the year of the bird and she really was always 'in a flap' (rushing around 'here, there and everywhere': bata-bata) around the house all day!"

"I was born in the year of the sheep and so were most of my friends at school and college, but we all had different personalities."

These replies from the women seem to indicate that their very tendency to use the animal years as a means of elucidating the ages of other people has resulted in their encountering many cases where the correlation does not fit, and therefore they tend to be rather more sceptical than the men. However, even those men who gave examples about themselves were unwilling to say that the correlation necessarily holds for all people, one of them saying he has a "75% belief"(15); two others (a man and a woman) thought that if the correlation does fit in some cases it is "chance", and "such cases are exaggerated" or that it is a question of individual attitudes whereby one can read into a person's character the traits one wishes to find.

However, the question of 'belief' in the influence of the animal years on one's character is secondary to its

---

(15) Only one man, the 'catering manager' at Nissei, expressed a more absolute belief in the correlation between personality and the animal years of birth, but he is a very unusual individual in many other respects (see chapter 12). As he does not live in either Sakurano or Aoyama, but in another suburb of Ueno, he was interviewed additionally to the 100 local residents and for a different purpose. His view is that the twelve animal years, representing twelve terrestrial 'branches' of the ten celestial 'stems' in the Chinese cosmological scheme, are linked to the pattern of, and changes in, the dark spots on the sun. He says that the sixty-year cycle formed by the five 'stems' of earth, metal, water, wood and fire, the distinction between their 'major' (or 'older brother') and 'minor' ('younger brother') aspects - forming a total of ten stems - being generally ignored, is also found in the sunspot cycle. The number sixty is therefore the 'lowest common multiple' (saishō kōbaisū) in both systems and there must be some relationship between the two.

utilitarian purpose as a convenient means of ascertaining another's age without causing offence. For some the animal years are a curiosity and it is 'a game' (asobi) or 'fun' to discuss whether or not they fit an individual's personality, but it is by no means an 'active' belief for most people. For some it may be a 'passive' belief whereby they are prepared to accept the validity of the idea in a general sense, but those who say they 'believe generally' also say that they rarely discuss these issues with others: they certainly are not so convinced of the validity of the ideas that they try to persuade others. Rather, the ideas remain a 'passive' undercurrent in the general stream of social relations and are normally 'activated' temporarily in everyday speech only when it is convenient to do so in order to ascertain another person's age.

Relative age and absolute age.

Status hierarchies are based on differences of relative age, which in some cases (like the schoolgirls playing tennis) may accentuate differences of only one year but in other cases (like the use of formal speech to an older person) become operative when the difference is at least ten to twenty years. Traditional age-groups in rural Japan included people in an age bracket which may be wide enough in some cases to make them 'generation-groups' rather than 'age groups' (cf. Norbeck 1953: 379-382), and the same is true today of the reunions for college graduates of the 'same age' (dōnen) who are in fact only of approximately the same age and may not have known one another at all when at college[16]. However, the attribution

(16) I am grateful to Dr. Brian Moeran for this information.

of status or rank differences according to relative age depends upon some knowledge of the people's ages in absolute terms. In many cases non-verbal clues such as the other's appearance, style of clothing or name badge showing his rank in the firm are sufficient to establish norms for deferential conduct in the absence of other formal criteria for ranking (such as shop assistant to customer or teacher to pupil) in which formal ascribed status takes precedence over age (even if the shop assistant or pupil happens to be older than the customer or teacher). These account for the majority of social situations but in other more ambiguous contexts such as those between neighbours or friends a knowledge of relative age is not always ascertainable from appearance alone. Since certain linguistic forms, such as the ending - kun instead of -san or kimi ('you') instead of other words for 'you' such as anata, are used normally by older men to address younger ones in a familiar or friendly manner, the use of such forms to an older person may cause offence (cf. Nakane 1970: 28-9). A knowledge of absolute ages then becomes important and it is in such ambiguous cases that recourse may be made to devices such as the animal year calendar in order to elucidate the absolute ages necessary to justify the linguistic and behavioural[17] indications of status differences based on relative age.

---

(17) Some of these behavioural differences include the depth to which they bow to each other, the younger bowing a little deeper or lower, the extent to which the older person is allowed to take a leadership role in the flow of conversation and seating positions, whereby the elder person (other things being equal) is accorded the place nearest the alcove (tokonoma) of the main living room or formal room where guests are entertained (Nakane 1970: 83). These differences may be disregarded among closer friends of similar ages but may become operative in more formal situations where people do not know each other so well.

Finally, some indication that some attention is paid to the significance of animal years among the general population comes from the significant drop in birth rates in both 1906 and 1966 (Dore 1958: 447, footnote 150; Westney and Coleman 1983: 224-5), the year of the Horse with Fire[18], because women born in such years are said to be very fiery tempered, quarrelsome with their husbands, and to make 'notoriously bad wives' (Dore 1958: 447-8; Hendry 1981: 242) and 'inclined to kill their husbands' (Fujita 1983a: 57). In 1906 the drop may be due to deliberate mis-registration of girls born near the beginning or end of the year as if they were born in the preceding or following year, the kazoe system perhaps justifying this falsification of official records. The concern is that a knowledge of their real year of birth would hinder their daughter's marriage chances. It was better to avoid having a child than to take this risk, so in 1966 the 26% drop (Haak 1973: 110) is probably on account of the widespread use of contraception and abortion (Westney and Coleman 1983: 225), especially as parents would not normally know whether a girl or a boy were on the way. On the other hand, it seems as if some parents also tried to have a child in that year because they knew the expected drop in birth rate would reduce competition for their child when trying to gain a place at a good university.

---

(18) Dore (1958: 447) refers to this as the 'Horse in Fire Major', but the combination of yin and yang (or 'older brother' and 'younger brother') elements is such that a year of the 'Horse in Fire Minor' does not exist (Fujita 1983: 56). The term hinoeuma ('Horse in Fire Major') is applied to women born in those years.

Important ages in the ritual life-cycle.

Pregnancy

Not only are the years assigned animal names by the traditional Chinese calendar but also the days. On the day of the Dog in the fifth lunar month of pregnancy[19] expectant mothers first put on a waist-sash (hara-obi, literally 'stomach sash'), those expecting for the first time usually having their mothers, mothers-in-law or doctors tie on the sash for them (cf. Lock 1980: 69; Ohnuki-Tierney 1984: 181-4). The day of the Dog is chosen because it is thought that bitches have easy deliveries, so by a symbolic association of ideas the women hope to have easy childbirth too[20].

These cummerbunds come in several different varieties from traditional woollen ones about 15 feet long tied several times around the abdomen to shorter and simpler modern corsets with velchrome attachments. Because each expectant mother is expected to continue wearing such a sash for the next five (lunar) months the simpler types are gaining in popularity especially among those whose later pregnancy coincides with the hot, humid Kansai summer and who often alternate two or three simpler sashes on a daily basis in order to wash them. The older variety is nevertheless the one usually put on

(19) Pregnancies in Japan are said to last ten months, as calculated by the older lunar calendar (cf. Ohnuki-Tierney 1984: 182-3).

(20) The papier-maché model dogs (inu hariko) popular during the Edo period were also used as talismans for a safe childbirth and the protection of children; often a newborn infant was given one when first taken to the shrine of the family's tutelary deity (Yamada 1983: 325; cf. Sakamoto 1983: 126). These practices were probably connected also with the choice of the Day of the Dog.

initially (on the day the Dog in the fifth month) even if the expectant mother changes to another type after a few days or as the weather becomes warmer. Women now aged in their forties or older relate how when they were pregnant ten years or more previously the wearing of older type cummerbunds during the summer months was very uncomfortable at times but they nevertheless continued to wear it. Informants differ a little concerning which reason(s) they stress for wearing the sash, but these are always one or more of three basic types:

a) to protect the child physically,

b) to keep the womb warm,

c) to keep the child small in order that childbirth may be easier[21].

(Ohnuki-Tierney 1984: 184) also mentions reasons such as 'custom' and 'because it feels good').

The wearing of the sash (obi) or a substitute such as a corset seems to be almost universally practised by Japanese women, in that all 25 women questioned whether they had worn sash replied in the affirmative, including two Christians. (Cf. also Ohnuki-Tierney 1984: 182), who found that almost all of her sample of 149 women had used a sash except for a few who used a corset or girdle instead.) All informants except

(21) From a medical point of view (according to an English doctor) the obi is unlikely to have any effect on the size of the child unless it were worn so tightly as to be extremely painful, which it is not. British doctors generally discourage the wearing of corsets during pregnancy on the grounds that they take over the task of the stomach muscles which therefore become flabby and are slower to regain their former shape after childbirth, but informants say that Japanese doctors do not discourage the practice and often assist in putting on the obi (cf. Ohnuki-Tierney 1984: 183; Lock 1980: 69).

one had worn the obi for each pregnancy, the one exception being a very thin lady who wore it for her first child and "only sometimes" for her second and third children, saying she did not need it then. Her attitude seems to be largely based on the idea that the womb should be kept small to facilitate an easy childbirth and that her own muscles were sufficient for this task. The purpose of the obi is not to 'keep the womb small' so as to disguise the fact of pregnancy but on the contrary most women announce the news of their child's conception to their neighbours as soon as the pregnancy is confirmed and soon begin to wear pregnancy dresses which tend to emphasise the bump by their plain styles rather than detracting from it by lines or patterns.

The religious aspect of this practice becomes operative when the hara-obi is bought from a Shinto shrine (or, sometimes, a Buddhist temple) or else a sash bought in an ordinary department store is then taken to a shrine for the shrine's seal to be stamped on it or a safety charm (mamori) to be attached to it(22). All informants had done this except for one Christian lady who had conformed to the practice of putting on the obi on the day of the Dog but had not taken the cummerbund to a shrine for its seal or mamori. It is usually the hara-obi put on at first on the day of the Dog which is a more traditional style obi bought at a shrine (or brought to a shrine before being put on), whereas the more modern types may be worn on subsequent days. However, not infrequently those who have received a mamori charm from the shrine will

(22) Sometimes a paper fuda talisman is sewn into the hara-obi cloth.

also attach it to the obi bought elsewhere, saying that the charm gives them "peace of heart" (anshin) or a "sense of security" (anshinkan).

When the woman goes to the shrine she is often accompanied by her mother or else (if the two live a long way from each other) the mother may buy the obi at a store vicariously on her daughter's behalf and send it to her by post. This is usually the case when the hara-obi is bought directly from a shrine, but when the sash is bought from a department store some women then take it to a shrine by themselves, while others are accompanied by their mothers(23). Three women were accompanied by their mothers-in-law but in each of these cases there were reasons for deviating a little from the 'norm' because the mother of one of these expectant women had already died, another of the expectant mothers was living with her in-laws, and the third lived closer to her in-laws (also in Ueno) than to her own parents.

The mamori is for a 'safe birth' (anzan) and is normally obtained from a Shinto shrine but in four cases was from Nishiyama temple. There the seal used is in the form of a dog, stamped onto the obi in addition to the mamori attached to it, the whole ritual, including prayers for safe childbirth, costing 3,000 yen. One woman bought from there in addition a fuda plaque, also for safe childbirth (anzan) which on the

(23) Details of who accompanied the informants were not always ascertained, but in at least nine cases the informant was accompanied by her mother, in three by her mother-in-law and in seven cases the woman went by herself because her natal family were living at a distance. There was also one case of a friend giving the obi to a woman whose natal family live in Kyushu.

101st day after her son was born she returned to the temple and exchanged for a 'childrearing' (kosodate) mamori[24], but this is a relatively unusual practice. An even more unusual practice is that reported by Mrs. Ikeda, the wife of the professional bicycle racer, who went to Hiyoshi Taisha, a large shrine on Mount Hiei to the north-east of Kyoto, where her name was written on the hara-obi in brush calligraphy (shodō kanji), a mamori charm attached to it, and then both she and the hara-obi received an o-harai (ritual purification ceremony) from the priest[25]. The hara-obi was put on her by her mother-in-law after they returned home that same day.

Sometimes anzan (safe birth) mamoris are bought at other times during pregnancy, such as when a couple living in the shataku happened to pass a shrine specializing in safe childbirth charms while they were driving in the countryside, so they stopped off to buy one. Another lady, driving at the time in Kyoto, went around many shrines and statues of the Bodhisattva Jizō (the tutelary 'deity' for children) praying for a safe childbirth. Not infrequently the prayer plaques[26]

(24) She says that if the child were a girl one should go on the 100th day, but there is no known reason why there is this difference except that it appears to be related to conceptions of how long ritual pollution after childbirth lasts for each sex (cf. Bownas 1963: 68-9).

(25) This Ikeda family is well known at this shrine because each year at Setsubun (in early February, the date formerly considered to be the end of winter and heralding the beginning of spring) the Idekas go to the shrine taking with them the husband's bicycle over which the priest also performs an o-harai.

(26) One common type is called ema, shaped like a house with a pointed roof, which at one time used to bear a picture of a horse and so the ideographs used are those for 'picture' and 'horse', but the reasons for the connection with a horse are not known by the general public nowadays (nor by the anthropologist) Another type, gomagi, consist of longer, rectangular plaques of wood which may be stored by the shrine until they are ritually burnt, the smoke carrying the prayers to the gods (cf. Blacker 1975: 90 and plate 23), whereas ema are normally kept on public display in a shrine until being ritually burnt along with mamori New Year decorations and other religious items returned to a shrine around the New Year period. Both ema and gomagi have prayers written on them by the petitioner.

at Shinto shrines on which people write their petitions to the gods contain prayers for safe childbirth. Almost every expectant mother participates in some kind of ritual means to pray for safe childbirth, the only exceptions known being some Christians not represented in this Ueno sample(27).

When asked about whether or not these charms and prayers have any 'efficacy' (kikime), many mothers say they have never really considered the question but give one of two types of answer, sometimes both:

a) Yes, they probably do have "some" effect, simply because the child was born safely and healthily, although a number of people qualify this by saying that they can not say whether or not the safe childbirth was a direct result of the safety charm or would have happened in any case(28).

b) The important issue for the informant is not so much whether or not the charms have any direct, observable physical effect on the safety of the child but rather the sense of "peace of heart" (anshin) or "sense of security" (anshinkan) afforded to the mother's psychological state by her possession of the charm.

---

(27) The anthropologist knows some of these through Ueno Baptist church.

(28) In these replies it is virtually impossible to distinguish between 'passive' and 'active' belief because very similar wording is used by those who during pregnancy put on a hara-obi because they 'believe in' its power and those who also wore an obi and after the child is born say they 'believe that' the charm did protect their child who was born safely, here using Southwold's (1983: 50ff.) distinctic between 'believe in' and 'believe that' to be co-terminous with my usage of 'active' and 'passive' belief. However, the anthropologist's subjective evaluation of the informant' feelings, mode of expression (non-verbal as well as verbal) and intonation when discussing these matters makes him feel that only three women seemed to have an 'active' belief, and one had been unable to conceive for about eleven years after marriage.

A third, subsidiary answer sometimes given as an afterthought to one of the above is that the hara-obi would have some kind of 'effect' in keeping the womb warm and perhaps helping to cushion the womb from any bumps, but they do not know whether or not the safety charm has any effect on the situation. These are also common types of replies to other questions relating to religious practices, as will be discussed further in chapter 6.

The only woman who expressed any kind of half-doubt about the effectiveness of the charm had at first replied "Yes - because the child was born safely" but then as an afterthought mentioned how for her first child she had experienced considerable lower back pain and had a difficult birth, but the joy of having her child far outweighed the pain and it was not until questioned by the anthropologist some years later (and after she had borne a second child with a much easier birth) that she in any way considered whether or not her first experience of labour reflected on the efficacy of the pre-birth religious rituals.

The post-childbirth rationalisation that because the child is healthy the charms might have had "some effect" needs to be seen also in the context of attitudes to abortion. Not infrequently unplanned pregnancies after a woman has borne two or three children are terminated by abortions, thereby reducing the chances of children with congenital medical problems being born to women in the latter part of their childbearing years(29).

(29) Such children are born, but it is relatively uncommon to see those with Down's syndrome, for example, in public areas and then they are normally in a special group rather than with their parents because, it seems, there is a certain shame factor involved so that these children are often kept secluded inside the house.

Lock (personal communication) has found that a high proportion of mothers now at menopausal age had experienced at least one abortion(30) while among married women as a whole probably one third have undergone at least one abortion (Wagatsuma 1983: 247). Among women with two children already who have an unplanned third child the question of whether or not to have an abortion is often raised during the earlier stages of pregnancy. In one Aoyama household there was considerable pressure on a wife to bear a male heir after her first child was a girl. When she became pregnant with her second child the relatives urged her to have a test in order to determine the sex of the child and to have an abortion if the child were female. (The mother refused, and she did bear another daughter in spite of the family's criticism of her conduct.) In another case the mother's attitude was that her first two children (a girl and a boy) had been borne for the sake of her husband's family (to produce a male heir) after which they had stopped, but the unplanned third child presented her with an "opportunity to bear this child for myself rather than for my husband

(30) Lock also says that there seem to be guilt feelings associated with the fact of abortion, and often menopausal difficulties are attributed to the mothers' having had an abortion earlier in their lives. Ohnuki-Tierney (1984: 79) cites the contents of some ema which carry apologies and ask for forgiveness from the aborted foetus; usually these are written by the mother but sometimes by both parents. She also mentions the attribution of present medical problems to the aborted foetus, but in these cases the etiology seems to be viewed as a 'spiritual' rather than a 'physio-medical' one (ibid., p. 80).

and his parents". She decided against an abortion, but the likelihood of any fourth child being aborted is very high, the only case in Aoyama and Sakurano where a family has four children being one where the last two are twins; another family with male twins for the first two children have decided to try for no more in case they have twins again. Such attitudes should be viewed partly in the light of some Japanese reactions to twins as 'abnormal' (cf. Ikeda 1974: 314-6), and partly in the context of attitudes which see twins as involving considerable work for the mothers(31). The standard reply when Japanese parents are asked why they do not want more than three children, however, is that there is not enough space in the houses or they can not afford to rear so many children. To some extent this is true when the cramped conditions of modern urban life are compared with the size of some older farmhouses where the large families of some earlier generations were brought up(32), but it seems as if there may be a 'shame' element involved too, whereby the families do not wish to be conspicuously "different". This idea can not be validated within the fieldwork area itself simply because the only exception to test the rule involves an exceptional case

---

(31) Such attitudes need to be viewed also in the context of child-rearing practices as described, for example, by Caudill and Weinstein (1969).

(32) However, the prevalence of abortion or infanticide in rural areas during the eighteenth and nineteenth centuries was not always a response to famine conditions or economic hardship but was often a means of continuing or adding to household aggregate wealth which would be dissipated if there were too many mouths to feed (Hanley and Yamamura 1977: 26, 233-4, 264, 324-6 etc.). This longer history of abortions suggests that the modern rationalisation or outward appearance (tatemae) may not always correspond to the inner realities of a situation (honne).

of twins, but some confirmation of this hypothesis comes from three Christian families known to the anthropologist living in other parts of Ueno (those mentioned in chapter 2, footnote 40), each having four or five children. All of these families probably use some kind of contraception (indicated by the spacing of children and their having no more than four or five) but are critical towards the widespread use of abortion as a means of limiting family size for economic or social rather than medical reasons(33). However, the very fact that they are willing to be 'different' from those around them on account of their religious convictions suggests that they might also be more willing than others to be conspicuously different from their neighbours in their numbers of children.

It is clear that these families are exceptions to the general pattern whereby almost all other families use safety charms on their hara-obis or corsets, though these few exceptions are not on account of a 'non-religious' attitude but rather on account of a trust in a different God, to whom they probably also pray for the child's protection. However, the common attitude that "because the child was born safely the charm was probably effective" also needs to be viewed in

(33) Among a small sample of women questioned about their methods of contraception, the most common seem to be the condom and the sympto-thermal method, often in conjunction with one another, but a few students use coitus interruptus. The pill is not generally available except on special prescription for disorders such as 'very heavy menstruation": cf. Wagatsuma 1983: 247. Dore (1978: 142-4) discusses the adoption of contraception in a village. Statistics on the frequency of love-making among middle class families are given by Vogel (1963: 220, footnote 13) and Woronoff (1982: 48, 275).

the light of the high probability that children with congenital disorders detectable during early pregnancy and those who are fourth or subsequent children often would have been aborted anyway.

Hatsu-Miyamairi(34)

Purity and pollution concepts, linked primarily to Shinto institutions, regard a newborn infant and post-partum mother as 'polluted by blood' and unable to attend a Shinto shrine until a certain time has elapsed (Norbeck 1952: 271-3). Local rules about the timing differ in this regard (Bownas 1963: 69), but generally it is around a month after the infant's birth. There is a consistent difference in each locality according to the sex of the child, so that, for example, in one part of Kyushu the pollution ceases for a boy after 31 days but for a girl after 33 days (Embree 1939: 182-3) but in another part of that island the dates are 30 days for a boy and 33 for a girl (Hendry 1981: 201) while the dates commonly mentioned by Ueno informants mention the 32nd day for a boy and the 33rd for a girl. Why there is this difference is not clear, though Hendry's informants regarded it as 'evidence of the usual superiority of the male sex' (1981: 201), but it seems not unlikely that there is (or has been) some association between the widespread choice of the 33rd day for a girl and the similarly widespread ideas that women encounter a critical stage in their lives at the age of 33, as detailed in a later section (cf. Norbeck 1955: 119).

(34) Normally this is called o-miyamairi but since the term miyamairi may also be used of shrine visits in general the more specific term 'first miyamairi' (hatsu-miyamairi) is here employed.

This in turn might be related to word-plays such as 'three-three' (san-san) meaning either 'birth after birth' (Bownas 1963: 70) or, when pronounced as sanzan, meaning 'misery' (Norbeck 1955: 118). However, such associations do not explain the different dating for a boy except that there is always some idea that female pollution lasts longer than that of the male, perhaps because of the more frequent occurrence of female pollution by blood throughout the life cycle which is inevitable because of its connection with menstruation and childbirth.

The relatively simple ceremony of hatsu-miyamairi has been described by Hendry (1981: 201-3) for a rural village and appears to be very similar in urban areas. Essentially it consists of a kind of dedication to the god, lasting about 10 to 15 minutes or so, during which the family, the women dressed formally in kimono, stand in front of the priest at a shrine. The mother holds the infant in her arms while the priest recites a few Shinto prayers (norito) and then performs a ritual purification (o-harai) over them all by three formal waves of his 'sacred staff' (gohei). Then in black charcoal (as easily washable) he inscribes the ideograph for 'big' (大) on the forehead between the eyes of male children and the character for 'small' (小) in the same place on female children(35).

Apart from the obvious connotations of males being normally larger than females, most informants are unable to

(35) Some informants say there is also a colour difference between the sexes, the boys' mark being done in black and the girls' in red. The reasons for this are unclear.

supply any explanation for this symbolism, and neither have more specialist sources consulted, except for saying that it is a 'custom' or, in a few cases, "a sign that the gods see the child's face and look after the child from then on". One variant is that the character inscribed is that normally used for dog (犬), which resembles that for 'big' (大) except with the addition of one stroke, the implication being that it has some connection with the day of the Dog on which the hara-obi is put on, and is therefore symbolic of the birth having been an easy one. Such an explanation seems unlikely for a rite conducted after a birth (irrespective of the circumstances of the birth), the dog symbolism making more sense before than afterwards(36).

The overall purpose or result of the rite is nevertheless clear: the child is presented and dedicated to the god and put under the deity's tutelary protection. In rural contexts the god of the village shrine is normally the tutelary deity (ujigami) for each household in the village(37) and newborn members of the household are dedicated to that kami. One woman in Aoyama reports that when her child was born in her

(36) A further consideration is that the normal character for dog (犬) is replaced by a more specialised one (戌) for referring to the Year of the Dog, although in practice the more usual character (犬) is used widely at New Year on greetings cards and even on ema paper plaques in the year of the Dog, as observed in 1982, a year of the Dog. (Similarly specialist characters for the other eleven animals are not normally used in practice by most people.) Moreover, the use of the character for 'small' (小) on female babies seems to be a widespread and well established practice which makes more sense when in opposition to 'big' (大) for boys.

(37) Often the term 'hamlet' may be more appropriate in this context, owing to ambiguities in the term 'village' (mura) which may embrace several hamlets each with their own shrine (cf. Hendry 1981: 73, footnote 7).

natal village her father went out in the middle of the night just after the birth to announce the new arrival to the ujigami. This rural practice is not mentioned by urban informants but the shrine chosen for the miyamairi (of first-born children especially) is often that of the ujigami of one or the other parent. The principal reason for this lies in the widespread attitudes towards illness in a wife or mother - the one who cares for the sick in a normal family - that if she becomes ill there is no one else who can take care of her properly except her own mother (Lock 1980: 80, 218-9)(38). For the birth of a first child the expectant mother therefore returns to her natal home about six weeks before the expected date and stays there until six weeks or so afterwards, although there is considerable individual variation in these times. The journey is not infrequently one of a few hundred miles (or more), and is sometimes repeated for the births of subsequent children. Otherwise the wife's mother or parents come to stay with their daughter and her family for a while before, during and after the time of birth (Ohnuki-Tierney 1984: 185-7). These patterns are summarized in Table 4.2:

---

(38) A subsidiary reason may have been connected at one time with keeping the husband's family free from ritual pollution connected with childbirth, but this is unlikely because often villages had separate parturition huts anyway, and sometimes in traditional Japan the husband would play a major role in the birth process by supporting his wife's back (Oto 1963 : 47).

Table 4.2 Overall proportions of place of birth correlated with birth order

	First child	Second child	Third child[39]
Mother's natal home (or nearby hospital)	55.6%	46.7%	24.8%
Father's natal home (or nearby hospital)	6.3%	6.8%	9.2%
Couple's own home (or nearby hospital)	31.6%	40.5%	57.8%
Other locations[40]	6.5%	5.9%	8.3%

The minority of mothers who bear their children at their husband's natal home or nearby hospital consist of those who are living with their in-laws already, in which case categories two and three in table 4.2 become co-terminous, or else are those whose own parents are dead, infirm or live too far away whereas the husband's parents live closer. Sometimes in order to 'balance' the claims of both families the first child may be born at the mother's natal home and a second or third child at the father's, accounting for the trend for a higher proportion of third children to be born at the father natal home. However, a more general pattern is for the first child to be born at the mother's natal home and subsequent children to be born at the couple's own home with either the husband (in a few cases) or, more commonly, the wife's mother assisting the wife to look after the older children,

(39) Since the one case of four children involves twins for the final two, who were treated identically, they are counted together as one third child for the sake of these statistics.

(40) An example of a child born at 'another location' is that of the shataku woman from rural Kyushu whose husband was away on a two-year business posting to Indonesia and who felt unable to travel to her parents' home owing to the distance involved. Her child was born therefore, in a short-stay nursing home "because there was no one else to look after" her.

who may by then be in kindergarten or older and for educational reasons are less able to move to the maternal grandfather's home for a prolonged stay.

The effects of these patterns upon the practice of miyamairi rites can be seen in Table 4.3:

Table 4.3 Correlation of miyamairi and birthplace

	First child	Second child	Third child
Mother's natal home	$\frac{260}{315}$ = 82.5%	$\frac{168}{212}$ = 79.2%	$\frac{22}{27}$ = 81.5%
Father's natal home	$\frac{31}{36}$ = 86.1%	$\frac{29}{31}$ = 93.5%	$\frac{10}{10}$ = 100.0%
Own home	$\frac{145}{179}$ = 81.0%	$\frac{119}{184}$ = 64.7%	$\frac{39}{63}$ = 61.9%
Other	$\frac{28}{37}$ = 75.7%	$\frac{14}{27}$ = 51.8%	$\frac{4}{9}$ = 44.4%

In each column of table 4.3 the percentages in the two upper rows, those for miyamairi when co-residential with grandparents on either side, are greater than those for the two lower rows in which the grandparents were not present. There is also a difference according to birth order among those born at the couple's own home or 'elsewhere' and not at the home of grandparents, each of these rows showing a marked decline in the percentages performing miyamairi for the second and the third children. However, there is an increase for the percentages of second and third children receiving miyamairi among those born at the father's natal home; this is most likely attributable to those families who decide to reside with the husband's parents for the birth of subsequent children in order to 'compensate' for a preference for the maternal relatives during the birth of the first child (or first and second children perhaps). All these patterns indicate a substantial

parental influence on the decision whether or not to conduct a miyamairi, which corresponds to the reports of many of those interviewed who said that they performed the rite because their parents wanted it done. Not uncommonly they called the rite a 'custom' which their parents felt strongly should be continued for their grandchildren, an idea that it is the 'proper' thing to do and is expected socially. It is also a rite which the proud grandparents can attend near their home and which conveniently takes place when their newborn grandchild is at their home. In other cases the grandparents may insist on the rite being performed in their presence when their daughter or son comes to visit bringing the infant from elsewhere in the country: one couple who did not particularly want to do the miyamairi ceremony for their first child (who was born at a hospital near their home) felt obliged to have the rite performed twice - once for each set of grandparents (living in Tokyo and near Mount Fuji). This couple's reluctance to perform the rites was based on some exposure to Christian influence (particularly for the wife) but they nevertheless felt unable to resist their parents' demands that they fulfill this "Japanese custom"(41). They also bought mamori safety charms for the infant's general protection.

For the first and second children there is no significant difference in the receiving of miyamairi rites according to

(41) As detailed later, the most common attitude to the rites is that it is a 'custom' often performed at least partly in response to parental pressure.

the sex of the children. This is largely because they are born at a grandparental home and the same pressures to conform to 'custom' are felt irrespective of the child's sex. However, for a third child the pressure is considerably greater for a male child to receive miyamairi than for a female child, especially if he is the first male born in that family and therefore a chōnan: not infrequently in those families with three children the first two are girls and the couple have been trying for a boy(42). This tendency is shown by table 4.4:

Table 4.4 Percentages of children receiving miyamairi correlated with the sex and birth order of the child

	First child	Second child	Third child
Male children			
Percentage in sample	51.6%	49.4%	51.6%
Percentage receiving miyamairi	51.0%	51.8%	60.6%
Female children			
Percentage in sample	48.4%	50.6%	48.4%
Percentage receiving miyamairi	49.0%	48.2%	39.4%

Whereas the first and perhaps second child is sometimes dedicated at the ujigami shrine near to the grandparents' house, those born near to the couple's own home are usually

(42) Compare the case mentioned earlier regarding the family who wanted the second child to be aborted if female. Cases in which the couple ask the doctors about the sex of the child as revealed by tests are not very common, partly because those wishing to have such a test have to pay extra for it, and medical visits for pregnancy and childbirth are not covered by medical insurance unless there are 'complications'. (Sometimes such 'complications' can amount to little more than anaemia and needing to take iron tablets, but then the insurance company pays for the full cost of the birth. Some firms like Nissei also give employees a fixed allowance for childbirth costs, or contribute voluntarily in some other way.)

dedicated at a shrine near there even if it is not the ujigami shrine for their natal family. In a sense it is the couple's new ujigami because they are now living in that god's 'parish', but relatively few people view the nearest shrine as 'their own' shrine, instead tending to see the shrine at their furusato (birth place of the parents rather than of their child) as their own ujigami shrine. Others said they "no longer have a ujigami because they had moved away from their furusato and only a few said that they took their children to the nearest shrine at the time of birth because they regarded themselves as included in that shrine's territory (or 'parish'), but they do not call that their ujigami shrine. With the high rate of geographical mobility in urban Japan the idea of ujigami tends to be linked more to ideas of a 'rural' furusato than to that of an urban tutelary god, although some brought up in cities (especially a relatively traditional one like Kyoto) do use the term ujigami for the god of the shrine nearest their childhood home. Much more commonly children born in urban areas are brought to large, famous urban shrines which perhaps act rather like 'cathedrals' in attracting visitors from a much wider area than local 'parish' shrines, often for sight-seeing' or 'tourist' purposes more than for 'worship'[43] (cf. also Morioka 1975: 53-4, 70). In the same way rites of passage

(43) Such 'cathedral' shrines are often in the class known as jingu which were constructed in the Meiji period during the revival of Shinto nationalism and served as foci for some of the Emperor cult. Other major shrines may be called taisha ('big shrine') or simply jinja, the normal term for a shrine.

such as miyamairi and weddings are more prestigious if conducted at a well known, large urban shrine and the ultimate decision sometimes rests on a balance between convenience (normally euqal to proximity) and prestige (which may correlate with cost)(44).

The timing of miyamairi rites, although normally as close as possible to the traditional number of days after birth, is subject to some personal variation according to convenience and family circumstances. It is very rare for the husband to be physically present at birth (most hospitals forbidding or discouraging it) and if his wife is with her parents he may visit only once a fortnight or so at weekends, depending on the distance involved. If he wishes to be present at the miyamairi the rite may be arranged for a convenient weekend near to the traditional date, which is often more convenient for other relatives too. The father is present more often at the miyamairi of the first child (or of the chōnan if he is the second or third child) and less commonly at the miyamairi of subsequent children. The wife's parents or mother and sometimes the husband's parents or mother are also present in many cases, most of all if the rite is conducted at a shrine near their home.

Sometimes the rites may be postponed up to a few months owing to unfavourable weather conditions, as illustrated by the Kosakas, a shataku family with three children. Their

(44) The comparison with Anglican rites implied in the use of the word 'cathedral' may also extend to attitudes towards Anglican christenings as the 'proper' or 'expected' 'thing to do', often influenced by grand-parental attitudes, but further research may be needed to establish the extent of such parallels (or if such parallels are valid).

first child, a girl, was born on the 23rd of July at her mother's natal house in Kyoto but because it was too hot to dress up in formal kimono during the very hot Kyoto summer her miyamairi was postponed until the 15th of September (Old People's Day'!), a national holiday. Her miyamairi took place at the ujigami shrine of her mother's natal family. The second child was a boy, born on the 2nd of March, but it was considered to be too cold to perform the rite in early April that year (although April is often quite warm) so the rite was postponed until May the 3rd, Constitution Day, one of the Golden Week holidays. The child's miyamairi took place at a smaller shrine where the Kosakas had been married because it is the nearest shrine to Mr. Kosaka's parents' home. By the time the second child was born, Mrs. Kosaka's mother had died, so she was looked after during the child-birth period by her mother-in-law at the in-laws' home, so the choice of the nearby shrine for the miyamairi came naturally. For the third child, however, the Kosakas felt unable to move from their flat in Ueno (owing to the older children being at school and kindergarten) so her miyamairi was held at a large shrine (taisha) in Ueno.

Practical considerations concerning the weather accounted for Mrs. Endō in Aoyama not having a miyamairi performed for either of her two children: the eldest son was born in February, but Mrs. Endō was afraid of his catching a cold so decided not to bother having a miyamairi done for him. She treated her younger son in the same way in order not to discriminate between the two. Fiftyeight year old Mrs. Kobayashi said her son was born at the end of the war when she was living with her parents, a "poor

farming family with eight children. We were so busy getting food for us all and it was such a confusing time that I forgot all about having a miyamairi done for my son". Mr. Eiji Yasada, who normally takes a fairly sceptical view towards 'religion' (cf. chapter 3) said he was "too busy to bother about it". Others did not do it owing to their allegiance to Sōka Gakkai or Christian religious groups, but among the Christians were a few who compromised with parental pressure and had a miyamairi performed; in one case a Christian wife married to a non-Christian also gave her son in addition a Roman Catholic christening (which she regarded as "more important" than the miyamairi).

Principal attitudes towards miyamairi rites can be summarised as follows:

Table 4.5 Attitudes towards miyamairi rites

'Custom' only	20 cases
'To please the grandparents'	12 cases
'To pray for the child's health and happiness'	10 cases
'A rite of passage'	7 cases
'To pray for safe growth'	4 cases
'It gives the parents 'relief of heart' (anshin)	2 cases
'To report the birth to the gods'	1 case

These attitudes overlap to a certain degree because some informants mentioned two or even three of these items, but they have been classified according to their initial comments on the assumption that these are primary and the others are afterthoughts. This assumption is not necessarily a valid one if the later comments are products of deeper reflection, but the method adopted does indicate the

relative frequencies of the different attitudes even if the figures in table 4.5 are not watertight compartments. Moreover cases of multiple answers are few, and are often a rephrasing of the initial comments, as is clear from a reply like "It's just a custom ... a rite of passage".

The attitude that these are "merely" customs" is very common among those Japanese who deny having any personal 'religion' but, as argued in chapter one, it is impossible to distinguish 'religious' and 'customary' acts in any objective way when they are both performed in a 'religious' context (i.e. a shrine) and for apparently 'religious' purposes. As far as it is possible to ascertain, those whose attitude to miyamairi is that it is a 'custom' perform exactly the same kinds of acts as those who mention 'prayer' or reporting the birth to the gods(45). The practice is uniform but the attitudes are different. No 'beliefs' are necessarily entailed by this practice unless it is a 'belief' in the 'existence' of some kinds of 'gods' (kami), but this is not a 'simple' two-way relationship but rather a more 'complex' three-way interaction between practice, 'belief' and social environment. Parental pressure (i.e. 'social environment') may produce practice irrespective of 'belief' even among those whose (Christian) 'beliefs' are opposed to the practice. It is not unlikely that such people have a 'passive' 'belief that' kami do exist even if they do not hold an 'active' 'belief in'

(45) The woman who said the miyamairi is to 'report the birth to the gods' is not the same woman as the one whose father went in the middle of the night to report the birth, the miyamairi taking place thirty days later. This woman's attitude has more of joy at the birth, "relief" and a "sense of security" (anshinkan) because after waiting eleven years since marriage at last she had been able to bear a child.

the power of the kami to affect their own lives. Their attitudes are therefore more likely to be couched in terms of performing a "custom" or "to please the grandparents" than are those with a more 'active' belief in the kami's power and who say they go to 'pray' or 'report' to the kami. However, even those holding a more 'active' belief may be more motivated to perform the rite by the fact that they are living with their parents at the time than by their 'belief' itself. Further complications when trying to analyse these attitudes include the Japanese tendency to express the approved ideology (tatemae) rather than their inner thoughts (honne), the fact that few people in any society are readily able to supply their 'true' motivations in answer to a survey question (cf. Towler 1974: 159-160), and the multi-purpose or multi-motivated nature of such visits in at least a few cases (cf. Graburn 1983: 11-12). Nevertheless, the attitudes revealed in table 4.5 do indicate the spectrum and the relative frequencies of such attitudes and in so doing reveal some of the major motivations for behaviour.

One subsidiary motivation revealed by two families in their choice of shrine for the miyamairi is a desire for the child's academic success. They chose to dedicate their children at the Kitano shrine(46) in Kyoto, the kami of which is the famous deified scholar Michizane (8th century A.D.); this shrine is preferred to each family's own ujigami shrine(47)

(46) Its fuller title is Kitano ten-mangu.

(47) One of these families took their eldest child, a daughter, to their ujigami shrine in Ueno but took their second chil a son, to the Kitano shrine in Kyoto. While desiring academic success for their son (since this helps him to get into a prestigious company and to achieve economic 'succes they stress that the reason for their choice of the Kitanc shrine for the child's miyamairi is that the wife's paternal grandfather was a priest there, so they want to maintain this family connection with such a famous shrine.

because of their hopes for their children's futures[48].

7-5-3 rites (Shichi-go-san)

On or around the 15th of November (depending on convenience and holidays for the families involved) parents (or mothers, sometimes with grandparents) take their daughters aged three or seven, dressed up in bright kimono, or their sons aged five and smartly dressed, to a Shrinto shrine[49]. There they all sit in a group while the priest reads various Shinto prayers and performs over them the rite of 'purification' (o-harai), sometimes translated as 'exorcism'. Principal attitudes to this rite have already been tabulated and discussed to some extent in chapter 3, several of these attitudes overlapping with those for miyamairi. Just a few brief comments will be made on some of the other attitudes to 7-5-3 rites.

Some social pressure to conform to the rites is evident in some replies, but this element comes more from other parents and the children's peer groups than from the grandparents. Sixteen people mentioned a fear of their children

(48) Before taking examinations, especially the very important entrance examinations for high school or university, many students pray at this shrine and often write ema plaques praying for success (cf. also Graburn 1983: 21).

(49) Apart from the fact that the girls' costumes are more colourful than those of the boys there is no clear reason why the girls have this rite twice and the boys once. In a later section it will be suggested that the 7-5-3 rite might mitigate the 'calamitous year' which nowadays children experience (in theory) at the age of three but as this would not have coincided originally with the age of three, it does not explain the duplication of female rites. However, often the girls are taken only once (usually at the age of three) and many families do not bother to take them again at the age of seven.

feeling left out if they did not perform the rites, and similar feelings may lie behind those who said that they as parents felt "satisfaction at having done the rite" or that it was a "problem of the heart" (kokoro no mondai) for the parents and their feelings. Such social pressure also extended to two Christian families: the Protestants "just dressed up the children and walked in the gardens of the shrine but didn't have the o-harai performed", admitting this with apparently some embarrassment, while the Roman Catholics had a special church service during November for the children of these ages who dressed up and were given a special blessing by the priest.

The minority who see the rites as having "some" religious meaning are mainly first-generation migrants from rural areas, but the majority who see the importance of the rites in terms of 'memory', 'nostalgia' or 'custom' consist of people from both urban and rural backgrounds who do not think of the ceremonies in primarily 'religious' terms. Their scale of values is indicated by their spontaneous comments comparing the 7-5-3 rites with other ceremonies. Three said the ceremony is"like a birthday party" for the children, a related idea being expressed by another housewife who said that the children "are not really interested in the ceremony - only in the sweets and gifts they receive". Others compared the ceremony to other stages in the life-cycle such as school entrance examinations(50) the Boys'Festival in May or Christian baptism(51), all of which

(50) This is Mrs. Kimura who took her son to the Kitano shrine for his miyamairi because of hopes for academic success. More details about her are given in chapter 13.

(51) This is the lady who also allowed her son to have a miyamairi out of deference to the wishes of her husband and his family.

the individual informants felt were "more important" than the 7-5-3 rite. One man compared it to grave visits: "you do it if you can but it's too bad if you can't", and two others regarded it as similar to Adults' Day in January, when those aged twenty formally come of age. One woman regarded it as "like a fashion show" because of the special clothes worn, while the financial expense involved in buying the clothes was sufficient to deter one shataku family from participating in it at all (despite social pressures to conform) and to cause another shataku family to calculate their children's ages in a way which would enable them to perform ceremonies for the ages of three and five for both of them at the same time, involving only one contribution to the shrine of 5,000 yen or so, rather than doubling the expense by taking the children on separate years. For their son they used the conventional 'Western' way of calculating ages but for their two-year old daughter they used the traditional Japanese kazoe system according to which a child is regarded as one year old at birth but then everyone adds on one year to his or her age at each New Year[52] (Beardsley, Hall and Ward 1959: 295; Hanley and Yamamura 1977:43).

Adults' Day (Seijin no hi)

The traditional system of adding on one year to each

(52) By this system Mrs. Kimura was born on the 25th of December 1948, aged one, but on January 1st 1949 became two years old and became three years old on the 1st of January 1950. However, because she was born in the countryside her birth was not officially registered until the 2nd of January 1949, which is her official birthday when she was aged 'zero' by the Western reckoning (used by the Japanese for most other purposes).

person's age at New Year was universally practised during the Edo period (Hanley and Yamamura 1977: 43, 209) but with the adoption of the Gregorian calendar in 1872 and especially after the second world war (Beardsley, Hall and Ward 1959: 295) the 'Western' style of calculating one's age has become the norm(53). However, a remnant of the earlier practice seems to have been preserved in the choice of January 15th as Adults' Day. In traditional farming villages this was the date for all major New Year celebrations (Bownas 1963: 47-56) but with the adoption of the Gregorian calendar January 1st came to assume more prominence (Bownas ibid., pp. 39-46). The rural 'little New Year' (ko-shōgatsu) of the 15th January remained locally important with different villages responding to the calendar change in a variety of ways (ibid., p. 40) but in urban areas it now marks the end of New Year. On the 15th January many shrines light bonfires to burn the used safety charms, talismans, New Year decorations and other 'religious' paraphernalia which are generally considered too 'sacred' to throw away in the ordinary rubbish(54).

On this same day all those aged twenty in the city celebrate their 'coming of age' (with the right to vote)

---

(53) This also seems to have been influential in the widespread adoption of the 'Western' custom of celebrating individual birthdays.

(54) Special chopsticks and other items used at New Year are often included in the bonfires too, though some families burn these at home rather than taking them to a shrine to be burnt. Only one family (a young Sakurano family) said they had thrown away New Year decorations in the ordinary rubbish (gomi): all others had burnt them.

(Christian missionaries in Japan sometimes make the mistake of asking new converts to burn their charms, following the pattern set by St. Paul at Ephesus (Acts 19: 18-20) but a culturally more appropriate form of expressing rejection of these items is probably not burning but rather throwing away in the rubbish.)

and many respond to the invitations sent to them from the town hall to attend a special meeting. There they listen to what they consider to be boring speeches from the city's mayor and other dignitaries but they appreciate the special commemorative gifts (kinen) such as an engraved pen or special writing paper.

There are parallels to the 7-5-3 ceremony in that many girls receive from their parents at this time their first adult kimono, just as they received their first child's kimono at the age of three. Only rarely will they wear the kimono again, and after marriage will have the long sleeves cut off, so Adults' Day, like the 7-5-3 ceremony, is a time for taking many photographs. For many girls the formal photographs showing them attired in beautiful kimono on Adults' Day are taken by professional photographers in order to be used in the matchmaking arrangements for a miai marriage: almost always the go-between requires photographs of the girl in both kimono and everyday clothes as part of the portfolio of details which might be shown to the prospective husband(55).

Whether or not the girl prays at a shrine or temple, not uncommonly some photographs are taken in the scenic gardens of such locations. However, it is usual for those who enter the precincts of such areas to pray as well: a common proverb(56) says that it is 'unlucky' to pass through

(55) Not all the details are necessarily shown, but only those which the go-between considers to be appropriate.

(56) 'Superstition' might be a better word but is avoided here because of the danger of it being taken in a derogatory sense.

the torii portal of a shrine without praying there. How seriously such a saying is taken is another matter, but the majority who enter a shrine or temple, for whatever principal purpose, do bow or pray at some time during their visit. On the 15th of January this is one feature of visits for returning used charms or taking photographs of girls in kimono, and so shrine visiting is loosely connected with Adults' Day too.

The boys dress up in dark suits and ties for Adults' Day, just as they had been dressed up smartly for the 7-5-3 ceremony fifteen years previously. Although they do not have their photographs taken for the same purposes as the girls, one or two commemorative snapshots (often in a shrine, temple or park) are usually taken by the boy's parents for their family album. Some parents treat the twenty year olds to an expensive meal but most youngsters go out with their friends. They often go shopping or for a meal at a prestigious department store, especially the girls, while the boys might go to a bar or coffee house together. Those who have girlfriends may spend at least some of the day with the girlfriend while those without often put five yen into the offering box at a shrine and pray for the gods to give them a girlfriend, girls doing likewise for a boyfriend. The five yen involves a play on words between the 'go-en' meaning 'five yen' and another reading of the word 'go-en', using different Chinese characters, to mean 'honourable relationship' (or even 'honourable karma') - that is, courtship or marriage.

At Adults' Day, the photographs are not only for 'memory'

as at the 7-5-3 ceremony, but may also serve the functional purpose of miai photographs. Nevertheless, the elements of photography, new kimonos for the girls, an emphasis on the particular age attained by the participant, and an association with Shinto shrines (especially in the burning of charms on the same day) are all elements common to both Adults' Day and 7-5-3 rites. The former is not regarded as overtly 'religious' because the meeting for young people is held not in a shrine but at a public hall in Ueno(57), but in practice Adults' Day does contain some 'religious' elements for many participants. Not only do many visit shrines on the same day but many (girls especially) also have their fortunes told by a palmist or another type of fortune-teller. Booths for such divination are specially set up on the top (restaurant) floor of the most prestigious department store in Ueno and attract in particular those who want to know about their future careers (mainly boys) or future marriages (mainly girls). Afterwards they often describe such consultations as "half curiosity" or "half fun" but are less willing to discuss how far they are prepared to assert a 'belief' in it(58).

A final parallel with the 7-5-3 rites is that many of those who visit a shrine also buy a mamori safety charm. Some describe this as a kinen or 'souvenir' to remind them of the day. Those bought by parents for their children at

(57) According to some informants who have participated in Adults' Day rituals in other parts of Japan, there is sometimes a visit to a shrine after the meeting at the public hall, though participation in the shrine visit is said to be optional.

(58) Attitudes to fortune-telling are discussed in further detail in chapter 6.

7-5-3 rites are kept by the children, often for many years, whereas those aged twenty who buy such charms for themselves on Adults' Day may either return the charm the following year and buy a new one or else keep it some years, perhaps until marriage. This is especially true of those girls who visit a shrine reputed to specialise in matchmaking(59).

For the girls the Adults' Day rites are overshadowed to some extent by prospects of marriage in the coming few years: almost 90% of female informants married between the ages of 22 and 25, irrespective of whether their match was by miai, ren'ai or shōkai. For the men marriage is not such an immediate prospect (since most married men are about five years older than their wives, 85% of them marrying between the ages of 24 and 31) but many of them will be finding employment at about the same time as many girls of the same age will be marrying. Hence Adults' Day is a marker indicating an approaching change in the life-cycle when many young men and women leave home for the first time, the women into another household as wives and many men to shataku dormitories. In the same way the 7-5-3 rites mark a transitional period in the children's lives when they also begin to move out from the home to a limited extent: at the age of four most begin to go to kindergarten (initially for just a few hours once or twice a week) and at the age of six compulsory education (gimu kyōiku) begins as they enter primary school for

(59) One shrine famous for this, which was visited by some Ueno girls before marriage when they were in the Tokyo region, is the Izumo shrine in Shimane prefecture. Graburn (1983: 21) notes that Izumo is visited both by unmarried people looking for spouses and by young married couples praying for a successful (or fertile) marriage.

the first time. Often professional photographers are employed to take photos of the children in their new uniforms for kindergarten or primary school; otherwise the parents take their own snapshots of the children. Therefore both Adults' Day and the 7-5-3 rites have become markers of a transitional period in the life-cycle when a 'parting' or leaving of the home is imminent (even if only a partial 'parting' when going to kindergarten or primary school). For some, the parting will come the following April, when the academic year begins, but for the adults the parting may come after another couple of years when they graduate from college (itself a time when some, especially young men, have left home for some of the year). The modern educational system does not correspond exactly to the ages marked by the 7-5-3 and Adults' Day rites, especially for those who fail university entrance examinations and need to wait a year before trying again(60), but the timing of these rites still corresponds, to a large extent, to the timing of transitional periods in a person's life when he or she begins to leave home.

The 'parting' is balanced by a corresponding 'entering' - of school, company or new household (and 'lineage group', ie, for the wife at marriage). These 'enterings' are also marked by ceremonies - welcoming speeches at schools and companies, followed by special training and orientation (cf. Rohlen 1974: 35-51; Clark 1979: 158), or the rites of betrothal and wedding to mark the commencement of a marriage (cf. Hendry 1981, ch. 5) - but as these have already been described and

(60) This is known as rōnin-seikatsu and seems to be fairly common among those aiming for more prestigious universities.

analysed in detail by Rohlen and Hendry and do not occur at a fixed age in life (but at a general stage spanning a few years of age) they will not be discussed in detail here. There is no overt religious component in the Nissei welcoming ceremonies, but for those who entered the firm after high school, without going to university, there is a religious rite at the company shrine to mark their coming of age when they are twenty. This brief ritual, the seijin shiki, takes place on or about the 15th of January and its structure is virtually the same as that of the New Year safety prayers to be described in chapter 12, except that the stated aim of the prayers concerns the new recruits' ambitions, hopes and expectations in the firm (instead of safety). Afterwards they have a party together at company expense.

Yakudoshi ('Calamitous years')

Most informants were unable to suggest any reason why the ages of three, five and seven should be chosen for the 7-5-3 rites except for one shataku man who thought that there might be a connection with the 'minor calamitous year' which occurs at the age of four, the rites at three and five somehow mitigating the influence(61). His wife added that four year olds often injure themselves when they fall off their tricycles, so they "need to be careful" at that age.

This shataku family are unusual in their awareness that the age of four is a 'calamitous year' (yakudoshi), since

(61) The 'calamitous years (yakudoshis) are reckoned by the kazoe system, so most of those aged four by the kazoe system are three by the 'Western' reckoning normally used for the 7-5-3 rites. Presumably at one time the 7-5-3 rites were also reckoned by the kazoe system so there would have been no overlap.

many people know only about the 'major calamitous years' in their lives, which for women occur at the ages of 19, 33 and 37 and for men occur at the ages of 25, 42 and 61. Among these 'major yakudoshis' most people are aware of only the middle one - 42 for men and 33 for women - as an age in their lives when they are thought to be particularly susceptible to misfortunes, injuries or sicknesses. Many are aware also that the years preceding and following a major yakudoshi are also yakudoshi years; these years are called the maeyaku and atoyaku respectively. These are 'medium calamitous years', and like the 'major calamitous years' are different according to each sex. 'Minor calamitous years' for one sex are those in which the other sex has a 'major' or 'medium' calamitous year, in addition to the ages of 1, 4, 7, 10, 13, 16, 22, 28, 40, 46, 49, 52, 55 and 58 which are 'minor' yakudoshis for both sexes. These ages are summarized in table 4.6, though it should be noted that these are the ages listed on a large notice board at the Ueno jingū (a large shrine) and that according to Norbeck (1955: 107-8) there are some regional variations in the years regarded as yakudoshi:

Table 4.6 Yakudoshi years for men and women

	Men	Women
Principal Yakudoshi[62]	42	33
Major Yakudoshis	25, 61	19, 37
Medium Yakudoshis	24, 26 41, 43 60, 62	18, 20 32, 34 36, 38
Minor Yakudoshis differentiated by sex	18, 19, 20 32, 33, 34 36, 37, 38	24, 25, 26 41, 42, 43 60, 61, 62
Minor Yakudoshis undifferentiated by sex	1, 4, 7, 10, 13, 16, 22, 28, 40, 46, 49, 52, 55, 58	

Four principal reasons for the choice of these various ages have been listed by Norbeck (1955: 116-119)[63], of which the fourth and to some extent the second are quite commonly reported by those interviewed in Ueno[64]. These are as follows:

a) The Chinese calendar repeats the animal year of one's birth after every twelve year cycle, and after sixty year returns again to the same combination of element and animal[65]. Therefore the repetition of one's 'year of birth' is a time of danger and uncertainty, especially the beginning of a completely fresh cycle after sixty years, and so these ages in the life cycle

(62) The Ueno jingū calls these major yakudoshis without differentiation from other major yakudoshis but most people regard these as the most important.

(63) Norbeck gives three main reasons but a fourth is implied in his discussion of the relation between yakudoshis and age-grades (pp. 107, 116-7).

(64 I am grateful to Professor Toshinao Yoneyama for pointing out and explaining some of these reasons before I had read Norbeck's article.

(65) More technically called 'stem' and 'branch' respectively.

are times requiring particular caution and the use of special prayers or charms to avert danger. This theory accounts for the choice of the numbers 1, 13, 25, 37, 49 and 61, and for those 'medium' yakudoshis associated with these numbers when these are 'major' yakudoshis - i.e. the numbers 24, 26, 36, 38, 60 and 62. However, only three of these six numbers at twelve year intervals are 'major' yakudoshis, the other three being 'minor ' ones, and this theory leaves unexplained many other yakudoshi years.

b) A few yakudoshis may be explained by homonyms, considering the fondness which many Japanese have for such plays on words. This arises from the fact that most Chinese characters can be pronounced in more than one way, either by a Japanese rendering of the Chinese reading or by the use of a Japanese indigenous word of the same meaning. Therefore the number 'four' can be read by the Japanese word 'yon'(66) or by the Chinese-derived(67) reading for the character as 'shi'. Shi is also the word for 'death', however, so the number four is often avoided in numbering rooms of buildings or houses in a block - most blocks in Aoyama lacking the number four(68) - as well as in the numbers of flowers in a bunch or, sometimes,

---

(66) Depending on the context, the Japanese reading can also be yotsu, in which case the character is read yo, plus a suffix for -tsu (四つ).

(67) The Japanese readings lack the Chinese intonation markers and are usually derived from ancient rather than modern Chinese forms. The lack of intonation also produces homonyms in Japanese among words distinguished by intonation in Chinese.

(68) There is a block number 4, however, within which no house is numbered 4 - 4.

of vegetables sold in packs[69]. Similarly, the number nine can be pronounced as ku, with connotations of words such as kurushimi, suffering, or kutsū, pain, and may be avoided for similar reasons as four, though the number four avoidance seems to be commoner or stronger.

Therefore the yakudoshi at the age of 42 is sometimes explained by saying that 42 can be pronounced shi ni, meaning 'to death', and is therefore to be feared, whereas 33 could be pronounced sanzan, a homonym for a word meaning 'hard', 'difficult' or 'troublesome'. It may also mean 'birth difficulty' (Bownas 1963: 152). While these two 'folk explanations'[70] are those most commonly cited, the same reasonings could also account for the yakudoshis at the age of 4, 49 and perhaps some of the others containing the elements 4 or 9.

Norbeck (1955: 118) considers this 'folk etymology' to be unlikely on the basis of it depending upon a widespread knowledge of the alternate readings of numbers which he considers to be dependent upon a high degree of literacy among the ordinary people in the Edo period or earlier. However, his reasoning can be challenged by the following considerations which would argue in favour of the 'folk etymology':

---

(69) Some fruits and vegetables such as apples or tomatoes are sold in packs of four in supermarkets, but it was noticed that some supermarkets never sell bundles of four sweetcorn always having packs of three or five, whereas some smaller vendors did not mind selling sweetcorn in groups of four - in this case a large supermarket appearing to be more 'superstitious' than the small vendor 100 yards down the same street.

(70) Quoting Norbeck's use of the term (1955: 118).

i) Literacy was in fact fairly widespread by the end of the Edo period (mid-nineteenth century) among commoners as well as gentry, about 40% of the male population and 15% of the women being literate - a figure higher than that of England and other countries at that time (Dore 1965, 100-101).

ii) 'Literacy' in Japan is not strictly a concept amenable to comparison with countries having a 'simple' alphabet system: two types of syllabaries (kana), each consisting of 52 'letters', form the level of literacy used in books for children of infant school age. Gradually during primary school some of the most common or simpler Chinese characters (kanji) are introduced, among the first being the kanji for numbers. Therefore a knowledge of the variant readings of numbers does not require a high level of literacy to produce connotations and word plays for the numbers 42 and 33.

iii) Even if the majority of the population were illiterate, a knowledge of such puns can be diffused from the literati into the general consciousness, perhaps forgetting the 'original' source of the idea in this process of diffusion, especially once the idea of yakudoshis became widespread and practice took precedence over questions of origin(71).

iv) If the numbers chosen as yakudoshis are arranged in numerical order omitting the 'medium' yakudoshis (which are dependent upon their proximity to the 'major' yakudoshis), then almost all the yakudoshis fall at intervals of three

(71) Compare the similar taboos on the number 13 in the West, which is said to have been derived from the fact that 13 were seated around the table at the Last Supper; this 'origin' in a literate tradition (in this case read and taught in churches and heard by those who were illiterate) is generally unknown, although the practice of avoiding the number 13 has continued.

years, with the marked exceptions of 33 and 42 which are separated from their 'nearest' yakudoshis by intervals of 5 and 4, and 2 and 4 years respectively(72). This produces a pattern of 19 sets of (normally) 3 year intervals between the ages of 1 and 61 which is distorted in order to incorporate the years 33 and 42, this pattern indicating that the choice of these years comes from a different source - most likely from the puns in the 'folk etymology'.

c) A third suggested origin of the yakudoshi complex is that these years mark times of critical change in the life-cycle. Norbeck (1953: 381; 1955: 114-7) has shown how some yakudoshi years marked the boundaries of formal age sets in traditional Japanese villages, and it may be that such considerations influenced the attribution of sex distinctions to the 'major' yakudoshi years. Either these differences by sex at the boundaries of major life stages (such as retirement for men at the age of 61) were imposed upon the regular pattern of 3 year stages outlined above or else the major segments of the life cycle according to age groups were then further subdivided into regular sub-sets of 3 years. Since detailed information on former age-grading practices in rural areas is rather fragmentary (cf. Norbeck 1953: 373), it is impossible to decide which pattern preceded the other(73).

---

(72) The numbers so arranged are: 1, 4, 7, 10, 13, 16, 19, 22, 25, 28, 33, 37, 40, 42, 46, 49, 52, 55, 58 and 61.

(73) On a priori grounds we might assume that the more complex yakudushi structure was built upon the simpler structure of age-grades, but I have my doubts about this too, because the 'simpler' can also be a 'degenerate' form of the more complex, as indicated by the second law of thermodynamics which can have application in the social sphere too.

This theory suggests that the word yakudoshi is derived from another word for 'yaku', meaning 'responsibility', so the yakudoshis are 'years of responsibility' (cf. also Bownas 1963: 173), but, as Norbeck (1955: 117) notes, the question arises why the years of responsibility afterwards were not also feared, when some duties continued. Similarly, data on former demographic patterns is relatively scarce and will need further examination in relation to yakudoshis, but what evidence there is shows that the age of marriage in Japan was relatively late (often well into the twenties for many women) during the Edo period (Hanley and Yamamura 1977: 246-8). Therefore suggestions(74) that the age of 19 denoted the time of marriage is not supported by historical data, although it may be that the ages of 33 or 37 indicated the normal age for the cessation of childbearing (ibid., pp. 216, 236, 241).

d) The most common reason for observing yakudoshis reported by informants in Ueno is a theory that one's body changes at these critical points in a way which they claim to have been 'scientifically' demonstrated but which appears to be a 'pseudo-scientific' gloss to validate a traditional belief(75). Often informants would say they had 'heard' it is 'scientific' that the body "changes" or "deteriorates" or

(74) Such suggestions were made by a number of anthropologists with whom I have discussed these issues, but there is no need to cite their names here.

(75) On a general level it is obvious that one's health does tend to decline as one reaches middle age, but it is not 'scientific' to assert that this process accelerated or begins at a fixed age such as 42 for men and another age for women. Rather, the fixing of such an age is a socially decided demarcation of boundaries in a continuous process of ageing occurring at varying rates of intensity for different individuals.

"becomes tired" at the age of 42 for men and 33 for women so that they are more susceptible to disease at these times, but these informants could not cite a 'scientific' source for their ideas. Some were a little more precise in their affirmation that "the hormone secretion levels of the body change" or "the incidence of cancer rises after these ages", the most detailed exposition of such ideas coming from a 49 year old man who said: "Past data shows that it is not a superstition but scientific: at these ages parents receive a mental shock as they reach a crossroads in life when their children marry or leave home etc.". He, like the others, was unable to cite any specific 'past data' or 'scientific evidence'.

These informants who assert that it is 'scientific' are mainly those without a high degree of specialisation in medical or scientific fields of study, whereas two men with such a background - one a dentist and the other a professor of pharmacology and biochemistry at a leading research institution (i.e. Dr. Satō) - both dismissed such explanations about yakudoshis and denied having any 'belief' in yakudoshis because they are "not scientifically provable". However, this 'pseudo-scientific' theory about yakudoshis provides a justification or validation of the belief in the minds of most informants. It is almost as if 'science' has taken the place once occupied by a religious literati - technical scientific language being like the use of Latin by medieval monks - so that the 'mystification' of 'science' in relation to ordinary people allows the possibility of 'science' being used to validate or provide a veneer of acceptability to folk

concepts[76].

Statistics on the degree to which people pay attention to yakudoshis are ambivalent because those who in early life say they do not pay attention may do so when they encounter their own major (or 'principal') yakudoshi. However, the consciousness of yakudoshis varies so that some women may pay attention to their major yakudoshi at the age of 19 whereas the majority do not do anything about yakudoshis until they are 32 or 33 years old. This ambivalence on account of whether or not a person has already experienced a major or 'principal' yakudoshi partially accounts for those who are uncommitted in a questionnaire response and say they 'neither do nor do not' pay attention to yakudoshis. Out of 664 people who answered this question, 115 (17.3%) were uncommitted in this way, but 332 (48.5%) replied that they did pay attention to yakudoshis and 227 (34.2%) that they did not. Similar percentages were found by Morioka (1981) in a nationwide survey in which 51% replied 'Yes' and 48% 'No'[77]. This certainly indicates a high proportion of the population who do express some concern about their reaching a 'major' or 'principal' yakudoshi age. A change in replies from 'No' to 'Yes' is discernable among a few men in their early forties interviewed in 1984 who had bought special charms or visited particular

(76) Another case of a folk concept becoming 'validated' by a 'scientific' or 'pseudo-scientific' explanation is that of 'fireballs', said by some to be the spirits of dead people but by others to be potassium from bones which had somehow become ignited (cf. chapter 14). However, most cases in which people claimed to have seen a fireball involved not graveyards but other places, and were normally seen by children and not adults (as detailed in ch.14). The modern practice of cremation instead of burial also makes the potassium theory untenable, as pointed out by one Ueno informant.

(77) The other 1% are recorded as 'others'.

shrines because of their entering a yakudoshi year but who in 1981 had replied on the questionnaire that they did not pay attention to yakudoshis. This same change in attitudes probably accounts for the higher percentage of women who say they pay attention to them (55.5% versus 44.1% of the male respondents) because women reach their principal yakudoshi earlier.

However, these overall statistics are not amenable to finer correlations by age and sex because some people pay attention to 'non-principal' yakudoshis (such as the major yakudoshis at the ages of 19, 25, or 61) and a few are aware of the minor yakudoshis, whether or not they observe any ritual actions at such times. More informative findings come from reported behaviour as derived from the interviews. Forty-five people who said that they 'paid attention to' yakudoshis were questioned about their behaviour, including three men who had indicated a 'non-attention' to yakudoshis in their questionnaires but who had participated in yakudoshi rituals by the time they were interviewed in 1984. Ten others who did not claim to believe were also questioned about their attitudes. It transpired that these divisions were not fully consistent with practice, largely owing to the ambiguity of the term 'to pay attention to' yakudoshis used in the questionnaire. Most interpreted this as intended, replying 'Yes' if they had bought a special charm or visited a special shrine because of their yakudoshi, but two people had not done either of these and yet said that they 'took care' during their yakudoshis, going to their doctors sooner than otherwise if they felt unwell, owing to their subscribing to the idea that the body deteriorates at that time.

Among the ten denying any concern with yakudoshis were three men already past their principal yakudoshi who remained sceptical on scientific grounds and three other men not yet at that age who claimed to be sceptical but obviously their scepticism could not be checked with their practice. Two of these, however, seemed to have a 'passive' rather than 'active' scepticism in that one of them, aged 40, mentioned how many of his colleagues attribute illnesses to their yakudoshi and say he ought to visit a shrine in his coming yakudoshi, so he thinks he may go "to be on the safe side". The other is in his mid-thirties but at New Year went with his brother-in-law to a shrine in Wakayama prefecture for a 'purification' or 'exorcism' (yakubarai) against the latter's yakudoshi; he did not realise at the time that his wife was entering her yakudoshi that year, otherwise, he says, he would have bought a charm for her at the same time, thereby indicating that in a few years he is likely to buy one for himself despite his present denial of any concern with yakudoshis.

All four women interviewed who denied any concern with yakudoshis had already experienced their main one (that of 33 years of age) by the time they were interviewed. The practice of only one of these was consistent with her 'disbelief', but she had also kept quiet to her husband about her approaching yakudoshi so that she would not feel pressurised into going to a shrine or buying a charm. Another denied a belief in yakudoshi on the grounds that "it is just from a word play on shi ni and sanzan so is all nonsense" but nevertheless accompanied her older brother and his wife to the Iwadani shrine for the sister-in-law's yakudoshi and bought

a charm herself because the sister-in-law said she should, both of them being the same age. This informant described her purchase as "a problem of human relations and obligations" (giri-ninjō no mondai) which forced her into purchasing the charm in spite of her scepticism.

Both the other two women who said they 'did not pay attention to' yakudoshis were pregnant at the time; both had girls that year. There is an idea prevalent among many Japanese women (though not all had heard of it) that if one bears a child in one's yakudoshi the effects of the yakudoshi are nullified: the joy or happiness of motherhood cancels out the 'calamity' expected in a yakudoshi. Those mothers who had borne a male child in their yakudoshi said that the calamity is averted only if the child is male, whereas those with a female child said that either sex child would cancel the yakudoshi, though one of them did admit that a male child "would have been better" - this lady having three daughters and no son. Since the sex of the unborn child is not normally known when the mother enters her yakudoshi at New Year - yakudoshis being calculated by the kazoe system - it is significant that all four women interviewed with male children born in their yakudoshi - one of them having been born in the 'medium' strength maeyaku - did go to pray for safety and protection in their yakudoshi and to buy protective mamori or fuda(78). They could not guarantee the sex of

(78) One of them did not buy a mamori or fuda but instead went to Iwadani shrine, prayed and bought a towel - as the cheapest available 'dedication gift' (hōnō) - on which she wrote her date of birth and name, leaving the towel as a kind of votive offering at the shrine.

their child to mitigate the yakudoshi, so it was a "relief" (anshin) when the boy was born as an 'added bonus'. On the other hand, two women with daughters born in their yakudoshis had not conducted special rites, partly because they were sceptical about yakudoshis and partly because they had a convenient 'justification' (pregnancy) for not going. Even so, one of these admitted to doubts when she had worse morning sickness than had been the case for the two previous children and sometimes wondered if it were on account of her yakudoshi.

One other woman, Mrs. Yamamoto, had a daughter born in her 37 year old major yakudoshi. She claimed that a child of either sex eliminates the evil and that the birth of their daughter did (retrospectively) take away the 'calamity' of the yakudoshi. Nevertheless, she and her husband went in the previous year (maeyaku, before the child was conceived), main year (honyaku) and following year (atoyaku) to Ueno jingū where they received a special 'exorcism' or 'purification' (yakubarai) and each year bought charms which they each wore around their necks for the whole year. This behaviour was rather extreme or unusual but is understandable in the light of a confluence of influences:

(i) Both had yakudoshis at the same time, when Mr. Yamamoto was aged 42 and his wife 37,

(ii) Mrs. Yamamoto had already had one miscarriage and so they wanted to take special care this time, and

(iii) both parents were relatively old at the time of their first (and, it turned out, only) child's birth, so "it would have been a shame (kawaisō) if anything were to happen to us while the baby was so young".

Therefore pregnancy during a yakudoshi does not in itself prevent a mother from taking special precautions against her yakudoshi, and in cases like the Yamamotos' may increase anxiety to some extent. Whether or not a mother thinks that only a male child or a child of either sex removes the 'calamity' also exerts an influence, but in cases like that of Mrs. Tsuchida, whose boy was born in her maeyaku and theoretically took away the 'calamity' of the honyaku and atoyaku too, shrine visits may be continued in these subsequent yakudoshi years "to be on the safe side".

Among the 45 who said they 'pay attention to' yakudoshis, 34 had visited a shrine in order to buy yakuyoke, charms to take away calamity, especially because they were entering a yakudoshi year. The most popular local shrine for this is Iwadani shrine, about five miles from the fieldwork area, which was visited by 25 of these 34 informants. A few went there at New Year but most between the 15th and 17th of January, the first few days of the New Year by the traditional calendar which emphasised the 'little New Year' (ko-shōgatsu) of the 15th January. By the kazoe system which is still used for reckoning one's yakudoshi, this is the time when all the population would have added one more year to their ages, and is therefore the appropriate time to pray for protection if one is entering one's yakudoshi. It may be that Iwadani became famous for yakudoshi prayers partly because the special day for worshipping its kami, the gomeinichi (79), falls on

(79) The only person to refer to gomeinichi, and who was also the source of information about the timing of the gomeinichi of Iwadani shrine, was Mr. Yoshioka, the Nissei catering manager, who himself is a very unusual person, as will be explained in chapter 12.

the 17th of January, but few Japanese know about the idea of gomeinichi nowadays(80).

Nine other shrines were mentioned as venues for yakudoshi prayers, including Yoshida jinja in Kyoto, Ueno jingū and the local Nishiyama shrine - the latter mentioned by only one informant, saying it was the ujigami shrine for the area. Other shrines were those in more distant parts of Japan visited while the family was staying with relatives over New Year. Often these were visited in association with Iwadani either in the same year or with differences between maeyaku and nonyaku or atoyaku depending on circumstances and inclinations each year. One particularly interesting case was that of Mr. Shimada, whose native village (furusato) is in the north-east of Japan. All his class at middle school had kept in touch with each other through the Old Boys Association and periodic reunions, and being all of the same age they all went together as a group to the Suwa shrine in Iwate prefecture. On other years, those of the group whose wives reached the age of 32 (i.e. 33 by the kazoe system) at the same time also went to the same shrine together to pray for protection in their yakudoshis. This case shows the continuing importance of networks based on friendship involving reciprocal obligations (tsukiai - cf. Dore 1958: 255; Befu 1980), in this case reinforced by their being a common age group. Although the school class is now

(80) They know about the use of the word meinichi to refer to ancestral rites at Butsudans but do not normally know about the use of the same word (with the honorific prefix go-) to refer to special days for worshipping a god distinct from festival (matsuri) days.

dispersed among many types of employment in many parts of Japan the very fact of their being the same age serves as a focus for group action when they encounter their yakudoshis together.

It is this network of tsukiai which often provides the incentive or motivation for purchasing charms or visiting shrines at the time of one's yakudoshi. Rarely do tsukiai visit together as in Mr. Shimada's case, but it is tsukiai who are aware of one another's age and who remind one another of approaching yakudoshi years. Tsukiai are those who have sometimes discussed whether or not their characters fit the year of their births by the Chinese animal years, and are usually aware of each other's ages by this or other means. Furthermore, the use of the kazoe system for yakudoshis means that all those in their early forties born in the year of the Dog (for example) will have their yakudoshis in the same year and can be identified by their known animal year of birth. Tsukiai then comment to such a person that he or she should "take care" and "be careful about one's health" during the yakudoshi years. Such statements need not imply a 'belief' in the influence of yakudoshis on the part of the speaker; they may be simply polite, socially appropriate comments, but their effect is to reinforce in the listener an awareness of his or her yakudoshi.

Many informants mentioned the influence of a social awareness that they were approaching or in their yakudoshis. They often mentioned the fact that other people said they

should "take care" or, more specifically, go to a shrine at this time of their lives. Some specify that it is their friends of the same age (dōnen)[81] who say they ought to go to a shrine, and so the social pressure (to conform to expectations) mounts as they enter their yakudoshis.

An increasing awareness of one's imminent yakudoshi comes not only from the comments of friends (tsukiai or dōnen) but also from those of family. Pressure from within the family may be harder to resist than that from friends and acquaintances, especially when the advice to "be careful" is given with one's own welfare in mind by those deeply concerned for the person. A wife who has already experienced her principal yakudoshi is often concerned for her husband's health as he enters his forties. She becomes more concerned about his diet and exercise because in general terms the likelihood of his having health problems does increase in middle age. However, the presence of a principal yakudoshi at 42 focusses the wife's cares for the husband's health upon those three critical yakudoshi years so that, whether or not she 'believes' in the influence of yakudoshis, she tends to see the performance of the expected rites as one means of allaying her general anxieties about her husband's health. In most Japanese families it is the wife and mother who is responsible for the maintenance of health

(81) The term dōnen may also apply to people of approximately similar age (Bryan Moeran, personal communication); it is often dōnen in their honyaku or atoyaku who encourage those in their maeyaku to perform the same rites as their seniors by a year or two had already performed.

and provision of medical supplies for the household and who often massages her husband or encourages him to take sufficient exercise (cf. Lock 1980: 78, 101ff.): it is significant, therefore, that the recent interest in herbal medicine (kanpō) and other types of East Asian medicine is concentrated among older generations, beginning with those in their late thirties or early forties (ibid., pp. 99-100, 250; cf. also ibid., p. 141). Among the many factors responsible for this phenomenon, it is not unlikely that the incidence of yakudoshis around this time(82) contributes to an increased awareness of health or medical problems and to an interest in the range of alternatives available (cf. also chapter 9).

Another type of pressure or influence upon decisions concerning shrine visits or the purchase of charms for yakudoshis comes from elderly parents, who have themselves experienced yakudoshis in the past. If they are not living in close proximity to a son or daughter in a yakudoshi, but are concerned for their child to have special protection for that year, they may buy a charm vicariously for their offspring. Such vicarious purchase of mamori and fuda is not uncommon, stemming partly from an older practice of pilgrimage groups (kō) sending one or two representatives on a long journey to pray and buy charms on behalf of the whole group (cf. Hori 1968: 67; Blacker 1975: 280-284; Graburn 1983: 52-3; Dore 1958: 335-7), and perpetuated by

(82) Especially the principal yakudoshi at 42 for men, but to some extent also the major yakudoshi at 37 for women.

the use of such charms as appropriate souvenirs in domestic tourism to give as presents to those at home (Graburn 1983: 47-49). In the same way parents sometimes visit a shrine on behalf of a child in a yakudoshi and then send the charm (yakuyoke) through the post or take it on the next visit. Such practices were reported by two shataku men who were not native to the Kansai region, Mr. Maruyama and Mr. Shimizu. Mr. Shimizu's mother paid a priest to recite prayers on his behalf for his yakudoshi while Mr. Maruyama's parents-in-law went at New Year to a shrine selling yakuyoke(83) charms, bought two and gave one to him - although he does consider it "strange" because he has never been to that shrine himself.

All those who go to a shrine for a yakudoshi also buy a charm of some sort - either a mamori kept on the person or a fuda placed in the house (sometimes in an inconspicuous back room or behind a picture in the case of some families a little embarrassed to admit too publicly to their observance of such religious practices). A number of other families who did not go to a shrine themselves possess 'vicarious' charms which are not conventional mamori or fuda but which have been given to them by relatives as protection in their yakudoshis. These include:

i) A pair of chopsticks given by a wife to her husband in his yakudoshi year as a 'substitute mamori' because the chopsticks are made of nanten wood. The characters for

(83) The term yakuyoke can apply to a wide range of protective charms in addition to those specifically for yakudoshis.

nanten 難転 mean 'avoidance of disaster'(84), so nanten wood is used in a number of contexts to ensure protection against evil(85).

ii) A cord for a kimono sash (obi-himo) given by a mother to her daughter for the latter's yakudoshi. The daughter claims the cord (obi-himo) is a commercial one from a department store, not one brought from a shrine, and does not know why it should have any effect on her yakudoshi. Her attitude is that at first she did not think much about the cord, and seldom used it, as she rarely wears kimono, but gradually she found that it helped her to have a "better seishin (spirit, mind)" about her yakudoshi and gave her kiyasume, a settled spirit. Although her attitude is that "anything will do for a yakudoshi" so that the cord did not have to be bought from a shrine, another lady(86) later explained that in a woman's yakudoshi the gift of a five-coloured object, especially something long such as a sash (obi) or waist-string (koshi-himo), becomes a protection against evil (yakubarai), taking away the woman's 'calamity' (yaku) in her yakudoshi, and is usually given by mothers to daughters. The purchase of such a long object

---

(84) The nan is used in sainan, disaster, and the ten means to 'go round', 'revolve' and, by extension 'avoid'.

(85) The use of nanten as a protection for the 'devil door' of houses is detailed in chapter 8.

These chopsticks of nanten wood derive their properties from the nature of the wood and are not specially decorated or inscribed in any way. Some families also have chopsticks of nanten wood used by the children for eating their packed lunches at school but seem unaware of the symbolic meaning of the wood.

(86) This was not one of the residents of Ueno, but Mrs. Irie, a teacher at a language school in Kyoto.

(whether from a 'secular' store or from a shrine) symbolises long life but the symbolism of the five colours was not known[87]. The use of such a sash or cord for a woman's yakudoshi might not be unrelated to the practice of wearing a hara-obi in pregnancy and hence symbolises both pregnancy and the removal of a woman's misfortune in a yakudoshi by the birth of a child.

iii) A pair of iron 'cooking chopsticks'(hibashi), about a foot long (the same size as the ordinary wooden chopsticks used in cooking) which are hung over the front door inside the genkan (entranceway to house) so that they chime against each other in the breeze or when someone opens the door. These were given to a man in his yakudoshi by his mother-in-law who lives in Himeji. They were also bought from a commercial shop rather than from a shrine, but a printed leaflet contained in the same box of chestnut wood explains that according to a legend from the Himeji district these iron chopsticks expel evil. It is significant also that the gift was given to the son-in-law at Setsubun in early February, which by the older calendar marked the end of winter and beginning of spring - in effect being a kind of New Year.

Setsubun was the occasion for yakudoshi rites by two women interviewed, both of whom were brought up in rural areas, and for one man from Kyoto. All three go to a

(87) She suggested that it may be connected with the use of five colours on curtains and other appurtenances (tukinagashi) used at Shinto shrines.

shrine each year at Setsubun for other rites so if the year happens to be a yakudoshi for them they buy an extra charm or say an extra prayer in addition to their usual ones(68).

During a yakudoshi year any ailments or injuries are easily attributed to the influence of yakudoshis by people who in other years would regard such events as part of the normal circumstances of life, a psychological process recognised by one of those interviewed and given as a reason for his scepticism. Others, with a 'passive' belief or openness to the idea of yakudoshis, would say about such illnesses "I wonder whether it could be anything to do with my yakudoshi?" when talking with their friends (tsukiai), but in a tentative and unsure manner - as was the case with Mrs. Kimura who after a major row with her husband was very tense for a few days, one symptom of which was a stomach ache, during which she speculated about her yakudoshi, but after the ache had gone she abandoned the idea of a yakudoshi connection. Those with a more 'active' belief in yakudoshis more readily attribute such illnesses to the influence of yakudoshis. An example of such a woman is

(68) Norbeck (1955: 109) mentions Setsubun as the occasion for a few customs connected with yakudoshis in some rural areas. Halldor Steffenson (personal communication) tells of a friend of his in Osaka who at his yakudoshi went at midnight at Setsubun to a crossroads wearing an overcoat but nothing underneath except a loincloth. He then abandoned the loincloth with a banknote pinned to it and waited in the shadows to see if anyone would pick it up. If it were picked up, the 'calamity' of the year would be taken away by the stranger and the man would be free of the fear of misfortune in his yakudoshi.

Mrs. Ikeda, aged 26 at the time of interview so in a 'minor' yakudoshi:

"You're always told about people getting illness to an unbelievable extent in their yakudoshis, and it's been just like that for me this year. I've had nothing but illnesses: my eyes have been aching recently and my child went down with chicken pox. It's been like that all the time this year."(89)

Despite the fact that several informants mentioned hearsay cases of misfortunes happening in a yakudoshi, few could provide specific examples of such misfortunes happening to themselves. The few instances are as follows:

I lost a tooth this year, my main yakudoshi, which is the first sign that one's getting old: the second is loss of eyesight and the third is loss of sexual appetite!" (man aged 41.)

"Though I agree with my husband that yakudoshis are not scientifically provable, nevertheless when I was 19 I was ill in hospital for three months and when I was 32 I broke a leg and had to use crutches while it was in plaster." (woman aged 43.)

All these examples involve people who were very close to the time of their own yakudoshis and could remember the instances well, with the exception of the woman whose misfortunes occurred at the ages of both 19 and 32. By contrast,

(89) Mrs. Ikeda is from a rural background in a village outside Ueno.

three men in their forties who had previously experienced a more serious illness specified that it was before their principal yakudoshis (occurring in their later thirties, these illnesses being meningitis, a heart operation and a stomach illness). They were confident that these had "no connection" with their yakudoshis, whereas more minor instances detailed above which did occur in a yakudoshi are emphasised as having a connection with the 'calamitous year'. Such observations further indicate a subjective element of interpretation in the management of illness, some using yakudoshis as convenient scapegoats for any ailments occurring that year.

Such personal illnesses are the type which would be expected from the widespread interpretation of yakudoshis as times when the body deteriorates and degenerative diseases become more prevalent. However, breaking a leg or uneasy relationships at work do not fall into this category, and neither do the majority of other misfortunes attributed to yakudoshis, all of which involved a third party. Six such cases were reported, as follows:

Female informants:

"My husband's mother died young, when my husband was 41 and in his maeyaku",

"My father died when I was 33",

"My younger sister died when my husband was aged 42",

"My older sister's child became ill and died when my sister was 33 years old",

"My mother died when I was 32".

Male informant:

"My wife had an accident when she was 19 and one of the

children also had an accident when my wife was 33"[90].

While all of these involve 'calamities' (yaku), they do not conform to the common 'pseudo-scientific' rationalisation for yakudoshis. However, these kinds of 'dramatic' events involving a death are often those which circulate by hearsay and become distorted in the re-telling, so that a popular image is built up according to which such events commonly occur in a yakudoshi. Many who expressed a 'belief' in yakudoshis and were unable to supply any definite instances of misfortunes in their own experience said that they had heard of such tales from "acquaintances", "my grandmother" or "other people", some simply calling it "ancient wisdom", "said from of old". These tales are then amalgamated with the 'pseudo-scientific' concept of degenerative diseases increasing from the time of a yakudoshi onwards to form a 'folk mythology' of verbal traditions related to the yakudoshi cycle.

However, an element of circularity is introduced into people's thinking by their use of prayer and charms. Such circularity is particularly apparent in 'negative' prayers for protection or safety, as compared with 'positive' prayers for a definite, specific goal[91]. It is the former type

(90) The first part of this statement does involve an accident to the person in a yakudoshi but it is not included in the few cited earlier because this unspecified accident was reported at second hand.

(91) There can be an element of circularity in both types of prayer if one allows for escape clauses such as "if God wills". Such escape clauses are very common in most religions throughout the world, though a recent trend in some Christian circles has been to emphasise that one can expect very specific answers to prayer (such as healings or material provision) provided a few basic conditions are fulfilled (Urquhart 1982). Statistical probability can be used to test whether such 'answers to prayer' are the result of 'chance' or are more likely to be the result of a significant relationship between prayer and the outcome, thereby removing the element of circularity from such 'positive' prayers.

which characterises most Japanese prayer, of which yakudoshis are a clear example. If one expects misfortune to occur and it does occur, then it can be attributed to one's yakudoshi and the 'belief' is reinforced, whereas if one prays or buys a charm in order to counteract the yakudoshi and then no misfortune occurs the 'belief' in the need for such prayers or charms is reinforced. Such 'belief' may still be mingled with scepticism, as in the common attitude to charms that "because nothing disastrous happened I suppose it may have had some effect", sometimes adding the qualification that one can not be sure whether it was the effect of the charm or of the person's carefulness about health or safety. Others take a more cautious view and say that the charm's 'effect' is more psychological than technical - giving 'reassurance' (anshin) or a 'sense of security' (anshinkan) - and it is noticeable that all three who attributed some personal misfortune to the influence of a yakudoshi hold attitudes of this type, since all of them had taken the proper ritual precautions(92). It seems that when experience conflicts with 'doctrine' there is a shift in the interpretation of 'doctrine' from it being held as 'factually true' to one of 'symbolic truth' (cf. Southwold 1979: 635-6). However, in cases such as yakudoshis the doctrine is not tested by experience until a certain age

(92) For example, the man who lost a tooth in his yakudoshi says the mamori charm which he wears next to his skin each day has some 'effect' in a 'mysterious' rather than 'visible' way. He says, "If it gives relief of heart, it is efficacious", (anshin dekireba, goriyaku ga aru) so that 'to believe is to be saved/reassured' (shinjiru koto wa sukuwareru/anshin sareru).

in one's life, before which the ideas are not very relevant to a person and therefore the 'truth value' is not yet categorised into 'factual' or 'symbolic' truth, some remaining sceptical if its truth value altogether. Such scepticism may remain even if the person feels obliged to engage in the practices owing to social pressures, but in other cases the conformity to expected practices induces in itself a certain suspension of disbelief and perhaps a willingness to hold the beliefs as 'true' in some sense during these critical years of one's life. Experiences during that time can be interpreted in ways which either confirm the idea that misfortunes occur in yakudoshis or else provide reassurance (anshin) that one took the proper precautions. When these precautions were taken and some misfortune still occurred, attitudes towards charms may undergo a shift in interpretation, but no cases are found in this sample of yakudoshi charms being rejected on account of contradictory experiences(93).

Yakudoshis and memorial rites: structural parallels

Ooms (1976: 71-73) has shown how there is a structural parallelism between the timing of birth and death rites, and argues that the two form a continuous cycle of rites of passage once the idea of reincarnation is introduced to begin the circuit again. He shows how the first month or so after birth or death are times of heavy pollution and danger, after which the new baby and new ancestral spirit become more

(93) One case was of a man who threw away a charm for traffic safety when his car crashed and overturned on the way back from the shrine where he had bought it. Such charms are discussed further in chapter 6.

'purified' ritually, the child and mother being able to enter a Shinto shrine for a miyamairi at that time. However, according to Ooms the mother and the bereaved family are not fully freed from pollution until the 100th day, when further memorial rites are held paralleling the child's first eating of solid food. At that time the parents prepare celebratory red rice which they send to their kinsfolk, an element of commensality paralleling the gathering of kin for the 100th day hōji(94). Beyond these similarities, Ooms suggests that hōjis in the 1st, 3rd and 7th years parallel miyamairi and the 7-5-3 ceremony, but admits that such parallels are 'weak' (1976: 72). The weaknesses are more apparent when it is pointed out that miyamairi occurs after 32 or 33 days rather than one year, and that Ooms is unable to suggest any structural parallels for the hōjis which occur on the 13th, 17th, 23rd, or 50th anniversaries of death. (He does suggest that the 33rd hōji, which is the final one in some households, might be structurally equivalent to marriage.)

---

(94) This parallelism has also been observed by Halldor Steffenson (personal communication): Ooms does not discuss the red rice custom (tabezome = 'first eating') to symbolise weaning. All mothers interviewed in Ueno about the 100th day celebratory meal had observed the custom; it is not normally a time for religious observances, but sometimes the shrine where the miyamairi had been performed give the parents a set of special dishes on a small tray for the child's 100th day weaning. The infant is given a few grains of rice on chopsticks by one of the parents, symbolising the staple grain, plus some soft tai fish (tai being used for celebrations) and perhaps other foods in small quantities. One family from Ueno held this on the 130th day, this being the family who on the 101st day had returned to Nishiyama temple to exchange the 'safe birth' charm for a 'child rearing' charm. They were also unusual in their custom of placing a small stone in the child's mouth and then removing it, symbolising the fact that "one day the child will eat anything, even hard foods", the ritual symbolising the commencement of a process which will culminate eventually in such a condition of being able to eat all foods.

A much closer 'fit' comes from a correlation between *henkis* and *yakudoshis*. To some extent this has been attempted already by Namihira (1976: 358) who points out the following parallels in the timing of rites of passage as found in the village of Yamano in Oita prefecture, Kyushu:

Rites after birth	Rites after death
7th day	7th day
35th day	35th or 49th day
100th day	100th day
First New Year	First Bon
First birthday	First year's *hōji*
3 year *yakudoshi*	3 year *hōji*
7 year *yakudoshi*	7 year *hōji*
15 years: entering young men's group	13th or 17th year *hōji*
25th year male *yakudoshi*	25th year *hōji*
33rd year female *yakudoshi*	33rd year *hōji*
42nd year male and female *yakudoshi*	37th year *hōji*
61st year male and female *yakudoshi*	49th or 50th year *hōji*

It can be seen that this village's timing of events(95) is a little different from those common in Ueno (and most other urban areas), but that there is some consistency between rites in the 'life cycle' and in the 'death cycle'. However, this consistency is again rather weak for the correlation between the numbers 15 and 13 or 17, 42 and 37, and 61 and 49 or 50. It is clear that local traditions differ in their emphases on certain years, and that the

(95) There are also differences in the lack of sexual differentiation for the 42nd and 61st *yakudoshis*, the emphasis on entering the youth group at 15 (rather than the national emphasis on Adults' Day at 20) and the greater emphasis on 'first New Year' and 'first Bon', though the latter is also emphasised by a significant proportion of urban dwellers.

timing of yakudoshis in urban areas may be an amalgamation of many local traditions reinforced by emphases on some major yakudoshis such as those at 42 and 33 (which have sinister homonyms) or 61 (which begins a new calendrical cycle).

However, if the minor yakudoshis which are common to both sexes are considered in addition to the major yakudoshis then a much closer 'fit' is discernible between the two cycles. It should be borne in mind that yakudoshis are still calculated by the kazoe system but hōjis by the exact anniversaries of death (identical to the 'Western' way of reckoning birthdays). This difference may explain the discrepancy of one year in some cases (for the 4th and 28th yakudoshis) but in other cases the discrepancy of one year is in the opposite direction or else the numbers are identical. The relevant comparisons are given in Table 4.7:

Table 4.7 Comparison between nenkis and yakudoshis

Years of nenkis	1	3	7	13	17	23	27	33	50
Years of yakudoshis	1	4	7	13	16	22	28	33	49

With the exception of the female major yakudoshi at 33[96], all these are minor yakudoshis common to both sexes. However, there remain a number of other minor yakudoshis with no comparable hōjis, these being at the ages of 10, 40, 46, 52, 55 and 58. Since many households cease to

(96) Whereas the meaning of the homonym for 33, sanzen (difficult, hard, troublesome) might be applicable to those in the afterlife, it does not make sense to apply the homonym of 42, shi ni ('to death') to those who are already dead.

observe nōjis after the 33rd or 50th, any former parallels to most of these minor yakudoshis may have fallen into decay(97), the cut-off point for 'memory' being less than that of a full life-cycle. (Those who knew the deceased well enough to want to remember him or her by memorial rites are often themselves dead within 33 or 50 years.) The number 10, however, does have some significance in Shinto funerary rites which have a 10th day observance (tōkasai), although this parallelism is weak because there is no Shinto rite after 10 years.

Therefore Shinto rites during life and Buddhist rites after death display a close structural parallelism, so much so that Naminira (1976: 367) calls one a 'mi or image' of the other(98). Table 4.8 summarises these parallels:

(97) I know of no historical evidence showing that such years were once the occasions for nōji practices.

(98) Kagami no mae no jitsuzō to kyozō no yō ni, sokkuri de ari.

Table 4.8 Parallel cycles in 'life' and 'death' rites

Yakudoshis	Nenkis	Days of rites after death -		after birth	Other rites
		Buddhist	Shinto	(Shinto)	
1 year	1 year				Shinto one year memorial rite
4 years	3 years				7-5-3 rite
7 "	7 "	7 days		7 days[99]	7-5-3 rite
10 "			10 days		
13 "	13 "				
16 "	17 "				
19 "					(Adults' day?)
22 "	23 "				(Adults' day?)
25 "					
28 "	27 "				
33 "	33 "				(Miyamairi on 33rd day)
		35 days		35th day[100]	
37 "					
40 "					
42 "					
46 "					
49 "	(49 or) 50 years[101]	49 days	50 days		
52 "					
53 "					
58 "					
	100 years			100th day	
		First Bon		First New Year	

(99) Easing of strict pollution in many rural areas (cf. Ooms and Namihira 1976: 358).

(100) Timing of miyamairi rites in some rural areas (Namihira 1976: 358).

(101) Timing of some hōjis in a village studied by Namihira (1976: 358).

This parallelism further reinforces the lack of conceptual differences on a 'practical' level between Shinto and Buddhism. There is a division of labour but not necessarily one of function, in so far as certain critical stages in the life and death cycles are mitigated by the performance of ritual action at such times. In life the crises are yakudoshi years; in death the risk is that one might become a muenbotoke if the proper rites are not performed at regular intervals, although relatively few people nowadays are overtly motivated to perform rites by fear of the ancestor becoming a muenbotoke. Other rites such as those for 7-5-3 may help to mitigate the yakudoshis at the ages of four and seven for girls(102). The full cycle of ancestral rites is often completed by the 33rd year, when the individual ancestor becomes a member of the collectivity of ancestors and no longer receives special individual rites (Plath 1964: 303), just as the newborn child becomes a recognised member of the community after 33 days. Some households do continue memorial rites until the 50th or 100th hōji, the last hōji being a kind of 'weaning' for the ancestor who no longer receives any special individual food offerings but shares with the other older ancestors the same foods offered to them all collectively. The ancestor, like the child, passes through certain developmental

(102) By the kazoe system those now aged three happen to be in their yakudoshi of four years, but such a coincidence was not the case when the kazoe system was in general use. There is no clear connection with the rites for boys at the age of five unless this is also to mitigate the yakudoshi at the age of four.

stages from an early existence highly dependent on others (lest the ancestor become a muenbotoke etc.) to full 'maturity' as a well-established ancestor. He or she is then no longer remembered individually but has become more assimilated to the Buddha-class of Hotoke(103) for whom no further rites are required.

Purity and pollution in the yakudoshi-nenki cycle

A few individuals mentioned certain restrictions on movement which they observed during yakudoshis (in addition to the more usual practices of shrine visits and special care for health through attention to diet and exercise). These restrictions are:

i) "One should not change one's position at work(104),

ii) "one should take special care of one's body in a yakudoshi year when one is in a different environment, such as on a business trip",

iii) "one should not build or repair a house or change its structure too much" (mentioned by two people).

All of these involve a change in location - becoming 'out of place' while one adjusts to the new and altered conditions. Such conditions are 'marginal' or 'liminal' in the terms employed by Douglas (1966) or Turner (1969: 94), and can therefore become 'dangerous' (Douglas 1966).

---

(103) Hotoke is here capitalized, following Dore (1958: 313), who distinguished Hotoke as 'Buddhas' from hotoke as ancestors, the same word being used for both in Japanese.

(104) This was mentioned by the man who had reported having problems at work during his maeyaku.

Douglas argues that these ambiguous marginal states are seen in most cultures as sources of danger or taboo, and the same psychological mechanism applies in Japan not only to the changes of location listed above but also to the yakudoshis themselves. This is indicated also by the attitude of some informants who described the yakudoshi years as like the nodes (fushi) or internodes (fushime) of bamboo, the same expression used by several other people with reference to the 7-5-3 or miyamairi rites. Such critical junctures occur about every three years in the 'life-cycle' and less frequently in the 'death-cycle', but form crucial boundary markers in social space or time. At these critical junctures one should not violate the principles of purity and pollution by becoming 'out of place'.

Chapter 5.

PURITY AND POLLUTION

The concern with purity and pollution in Japan has been noted in connection with Shinto rites, which almost always involve some reference to the driving out of impurity and the restoration of purity (cf., for example, Herbert 1967: 76-8; Holtom 1938: 29-30; Ohnuki-Tierney 1984: 35-39; Blacker 1975: 41-2; Lock 1980: 25-6). The entrance to Shinto shrines (and some Buddhist temples too) contains a 'laver'(hand-washing place) where running water can be scooped up in a long-handled ladle to rinse out one's mouth, wash one's face, or, more commonly, simply to rinse one's hands. Though there are variants in the style of washing place (for example, the Inner Shrine of Ise, the principal Shinto shrine of Japan, which contains a running stream containing carp), the essential concern with at least outward cleanliness when entering a shrine is found throughout Japan. Inner or spiritual purification is the concern of a later rite, involving the priest taking a pole to which is attached streamers of white paper (called a gohei wand or nusa), which he waves in three broad, stylised sweeps over the place or people to be purified, the ritual in itself being supposed to drive out spiritual pollution or evil influences from the area. Shinto prayers (norito) often contain references to, or petitions for, the driving out of pollution, asking, for example, that pollution and sins (tsumi) be thrown into the depths of the sea (cf. Ohnuki-Tierney 1984: 36-7; Aston 1974: 294,302; Philippi 1959: 45-49).

Another area which has been the concern of a number of Japanese anthropologists has been folk religion and its relation to purity and pollution. This relates not only to phenomena such as spirit possession and its polluting character (Yoshida 1967), but also to a trichotomy

according to which folk beliefs should be seen as constituting not a dual but a triple structure in terms of purity and pollution. Subsumed within this trichotomy are also the dichotomies of sacred and profane and of purity and pollution, neither of which are sufficient to categorise by themselves the range of religious expressions actually manifested in Japan (cf. Fujita 1983b: 362-3; Hoshino 1983: 186; Itō 1983b: 253-4; Namihira 1974: 231-9). This trichotomy is as follows:

Hare: auspicious or happy formal occasions such as New Year, Shinto festivals (matsuri) and rites of passage or other events held in a Shinto shrine such as miyamairi or most weddings[1].

Kegare: polluting occasions, the pollution coming from either blood or death, examples including funerals, childbirth, menstruation, wounds or injuries, and memorial rites (up to the fortyninth day after a funeral in particular).

Ke: usual, common or ordinary occasions involving a neutral state which is neither hare nor kegare.

These categories are to some extent absolute but at the same time they can merge into one another in practice, in that one of the three may be so emphasised in a particular locality that the other two are not so clearly demarcated conceptually (Namihira 1974). Nevertheless, for analytical purposes the categories are useful and can be opposed to one another 'etically' even if not so clearly 'emically'[2] at the level of

---

(1) Although many weddings take place in wedding halls or hotels, most are of Shinto style, though a few are Buddhist, Christian or non-religious (cf. chapter 2 for percentages of the types in Ueno and Hendry 1981: 171-185 for descriptions of the rites, especially pp. 178-185).

(2) It appears from Namihira's ethnography that the three categories are still present in each of the three villages she describes, but one or the other takes precedence in the minds of the people. For example, in Tani no ki buraku in Kōchi Prefecture, where the people fear possession (tsuki) or curse (tatari) from a wide variety of spirits (both dead and alive - those of other people) and from other miscellaneous sources, as diagnosed by a shaman (kitōshi), the people emphasise kegare far more than hare or ke (Namihira 1974: 239-244).

one village, though different villages emphasise different aspects.

These categories relate to purity (jō) and pollution (fujō) in so far as the 'profane' (zoku) can be identified with ke and the 'sacred' (sei) can be divided into a pure (jō) section equivalent to hare and a polluted or impure (fujō) section equivalent to kegare (ibid. p.237). However, the more relevant question for the present purposes is how these abstract categories relate to daily life and social relationships. Japanese anthropologists and folklorists have concentrated on rural areas in their analysis of purity and pollution concepts, of hare, ke and kegare, or of the sacred and the profane and how these classifications relate to each other (as summarised above), but relatively little attention has been paid to urban manifestations of these apart from the recent work by Ohnuki-Tierney (1984) and a few general comments by other writers(3). Probably the reasons for this lie partly in the difficulty of noticing things which are so familiar as to be taken for granted (but are more noticeable in rural areas or by foreign anthropologists in urban areas) and partly in the apparent fragmentation and lack of articulating links between manifestations of purity and pollution behaviour in urban areas. Even so, consistencies can be observed, some of which relate directly to folk religious practices and concepts and some of which appear to be derived from a concern for physical cleanliness and hygiene. These consistencies create certain principal categories, or areas of concern about purity and pollution, as will be outlined in the following sections.

---

(3) For example, Namihira (1976) comments in the final two paragraphs of her article (p.367) that in urban areas the concept of kegare is virtually absent from attitudes towards pregnancy or childbirth and suggests that the kegare concept is gradually weakening or disappearing with only the hare side remaining on the 'sacred' side of the sacred/profane dichotomy.

Purity and Pollution in everyday life.

a) A 'Clean' Community

Ohnuki-Tierney (1984: 30) notes that a concern with the contamination of impurity or 'dirt' from one person to another 'makes the Japanese very hesitant to use second-hand objects', so that they never use second-hand clothing unless it is from a family member or someone they know very well, and some people even leave second-hand books out in the sun for a few hours for the sun's rays to kill any germs before they use the books.

The result of this reluctance to develop a second-hand market is the development of those practices described already in chapter 2 concerning the 'big rubbish' (ōgata gomi) disposal days and the reluctance of most people to take anything from the pile of goods thrown out which are often in a still usable condition.

In the same way a concern with purity and pollution probably underlies the concern and interest shown by Ueno housewives in the methods used by the city corporation to collect household refuse. After the bags have been picked up from their collection points there is almost always a small scatter of left-over debris lying on the road which a local housewife (usually the one whose house lies next to the collection point) sweeps up meticulously within half an hour or so. However, this is not done without complaint, and at one jichikai meeting attended by the anthropologist one housewife gave vent to her feelings on the matter at great length during a time for 'Any Other Business', while the male committee members at first listened politely but later, obviously bored with the topic, began to talk among themselves while leaving the woman to continue her monologue after the meeting had formally finished.

The methods of refuse collection and disposal became a local issue in 1982, when the Ueno city council decided that fumes emitted by the plastic in the carrier bags supplied free of charge by local supermarkets and afterwards used for holding refuse was damaging the lining of the corporation's incinerator. They decreed that local residents should segregate plastics from non-plastic burnables and put the latter into paper refuse bags supplied by the City Corporation at a cost of 10 yen each, tied with string at the top, and that each housewife should fill in her name on the side of the bag in the space provided just under a slogan saying that she was making efforts to keep the city clean and tidy. Two representatives of the City Council attended special public meetings in each jichikai hall of the city in order to explain the new system and seem to have encountered hardly any protest at all until they came to Aoyama-chō.

Mrs. Kawashima, the lady who publishes her own 'mini-communication' news-sheet in rivalry to the jichikai, decided that this move by the Council constituted too much interference in local affairs and organised a protest. Persuading Mrs. Kimura and four other Aoyama housewives to join her protest (most of whom were linked to one another by their husbands working for the same electronics firm), Mrs. Kawashima and her colleagues conducted research on the disposal of waste in Ueno and other cities. Their main objections to the new proposals were as follows:

i) The paper bags issued by the Council do in fact contain a thin plastic lining in order to hold any damp material thrown away: the group calculated that the amount of plastic used for this lining is not significantly different from the amount used in the former type of disposal bags.

ii) The Corporation's bags are too large and would take longer to fill up with vegetable scraps than would smaller bags which can be put out for disposal more frequently.

iii) There are more frequent collections of burnable than unburnable refuse, but the latter is more voluminous and needs to be stored longer by each household.

iv) The unburnable refuse is dumped in a valley in the mountains; when this one is filled up another is used. Other prefectures have less wasteful uses for such rubbish involving more extensive recycling procedures.

v) The outside of the bags will become sodden and the bags rip if they are left for collection on a rainy day.

vi) The new system also involves separate collections of bottles and cans for recycling, the proceeds of which will go to the Town Hall rather than to any charity, whereas until then the local P.T.A. had organised such collections on a charitable basis.

vii) Similarly, local tradesmen who collect old newspapers for recycling will be deprived of a job by the new scheme for recycling papers. (This prediction was not substantiated in 1984, when the tradesmen still collected many newspapers. The local P.T.A. also continued to collect bottles and newspapers etc. for recycling, apparently hardly affected at all by municipal competition.

viii) It would be more economical to recycle bottles by sorting them into their original uses and reusing them rather than melting them down for remoulding.

ix) The older system involved an efficient use of free bags but now people have to pay for their disposal bags.

All these points, and others, were raised at the meeting in Aoyama when the Town Hall (shiyakusho) officials gave their usual talk. They expected it to be over within the usual hour, allowing a few minutes at the end for questions by the public, but they were in fact confronted by a team of six hecklers mingled among the other Aoyama housewives in the packed-out hall. The six had carefully planned their questions beforehand, had arrived early to choose their places in the hall

strategically and had conspicuously dressed up for the occasion. Their barrage of questions, comments and criticisms (often containing comparisons with the situation in Sakurano, their 'rival' area) continued for one and a half hours of 'question time', by the end of which the majority were impatient to leave, talking among themselves and sometimes laughing at various comments made, until finally the jichikai chairman decided it was time to bring the meeting to an end and formally thanked the guest speakers.

After this the six protesters continued to meet regularly and to lobby the Town Hall by post or letters to the press. None of the major political parties gave the group any support except for the Communists. However, as soon as the protest group became in any way linked with the Communist Party, the firm for which the husbands of most of the group worked made it clear that their employees' wives' names were not to be mentioned in any press reports or other publicity, and the husbands ordered their wives to cease their public activity. Only Mrs. Kawashima herself, whose husband owns his own firm, was unaffected by this, so only her name appeared in subsequent press reports. The group continued to meet occasionally for less than a year after this and then gave up its protests: the local government paid no heed to them and never altered their policies accordingly.

This micro-political protest left no significant mark on local history as far as the anthropologist can tell, but it is significant for what it illustrates about the local concern with refuse collection and the extent to which this can be used to mobilise middle-class housewives into political activity (cf. also McKean 1981: 102-8 and Ben-Ari 1984: 106-7 for accounts of similar protest movements concerning waste disposal). One might ask whether attitudes towards waste disposal methods would be less intense if there were not such a strong emphasis on purity and

pollution in many other aspects of Japanese life. Empirically such a question can not be answered because there is no way in which the social scientist can examine the protest group in isolation from its cultural milieu which includes a concern with purity and pollution. Rather, the anthropologist can point out the consistency between the two elements and suggest that the issue of waste disposal methods is more likely to arouse strong sentiments and political protest groups in a culture where purity and pollution concepts constitute an underlying motivation for behaviour(4).

b) House arrangements

Commonplace details of Japanese life reflect a concern with purity and pollution, though nowadays these features are usually regarded as simply matters of cleanliness and hygiene. There is a ritual to be observed in entering a house according to which one leaves one's shoes in the entranceway (genkan) and steps up into the house, often putting on slippers provided by the host. On entering a straw mat (tatami) room these slippers in turn are left at the doorway and one remains on the tatami barefoot or in socks or tights etc.

In the formal Japanese-style room of most houses is an alcove (tokonoma) usually decorated in a simple but tasteful manner by a hanging scroll (often containing a seasonally appropriate picture), a single vase of flowers and sometimes a prized ornament such as an ornate doll in a glass case. At meals the place of honour is next to the tokonoma and generally the 'lowest place' is furthest from it, by the door, so that guests entering a room containing a tokonoma tend to cluster around the doorway out of politeness and deference to one another. This attitude

(4) Compare, for example, the European concern for the 'natural environment' rather than for specific local issues of how refuse is to be collected.

of deference to the tokonoma suggests that the place has some religious or 'sacred' associations, some of which can be traced in the historical origins of the tokonoma. Wheelwright (1983: 116) reports that the tokonoma was evolved to exhibit a secularised form of the hanging scrolls which were originally hung over Buddhist altars or in religious halls, but this loose association with religion (or a 'secularised' form of it) does not explain the deferential behaviour accorded to the tokonoma today. A much clearer connection between the tokonoma and religion is given by Yanagita (1970: 125) when he writes, 'the meaning of etiquette about the tokonoma ... is understood when we regard it as the seat of the kami'. The process by which this association came about is detailed by Hashimoto (1962: 22), who writes that in the 7th century A.D.

> '... the Emperor Temmu ... issued a decree in March of the fourteenth year of his reign which ran thus: "My people shall make a place of honor in every home and make it an altar." So the people made this "place of honor" in the main room of their homes, - the "tokonoma" of the present day, - and in this place the Shinto believers hung a scroll of the Sun-goddess ... , while the Buddhists hung pictures of Buddha, or placed an image of Buddha ..... . With the passage of time the Sun-goddess was put into a wooden box ("Kamidana" ...), and the pictures and images of Buddha were transferred into gilded boxes, which ultimately became the "Butsudan" ... , while it became customary to hang pictures of scenery instead in the Tokonoma.'

In the village of Niike studied by Beardsley, Hall and Ward (1959) the ihai were taken from the Butsudan and put in the tokonoma, along with offerings of fruit and vegetables, on the principal occasions for ancestral rites (Bon, Higan, New Year and hōjis) and a scroll with a Buddhist mandala was put there also on 'important Buddhist occasions' (Beardsley, Hall and Ward 1959: 454-6, 463). The same association between the tokonoma and funerary rites is recorded for the fishing village of Takashima by Norbeck (1954: 120, 152, 92-3) but there the tokonoma is normally associated with Shinto by having in it an apparently permanent

scroll on which is inscribed the name of the Sun goddess and which remains in the tokonoma even during Buddhist rites at Bon (ibid., pp. 62, 120) When a faith-healer comes for a healing rite, however, it is replaced by a scroll depicting Fudō, the Buddhist god of Fire (ibid., pp. 134-5), but the religious ssociation remains.

The association with the sun goddess mentioned by Norbeck is similar to a pre-war idea recorded by Russell (1935: 214) whereby the tokonoma (at least in the part of Kyushu visited by Russell) was connected with the Emperor, considered at that time to be a direct descendent of the sun goddess. Russell writes:

> 'I was privileged to be shown the "tokonoma" ... . The word means a place to lay a bed ... . The room is reserved as a guest-chamber in which to lodge the Emperor. It is the cherished dream of every loyal Japanese that some day the Emperor may extend to him the unspeakable honour of seeking a night's lodging at his humble home. So there is the room waiting for the honoured guest ...'.

At New Year most households in Aoyama, and those in Sakurano who have not gone to visit families elsewhere, place in the tokonoma a rice-cake (mochi) shaped like an ancient curved mirror, so called a 'mirror rice-cake' (kagami-mochi), which in itself evokes connotations of the Shinto myth of the sun-goddess being enticed out of a cave by seeing her reflection in a mirror (Herbert 1967: 308; Holtom 1938: 127), or the use of a mirror as one of three symbols of the Imperial family (Ono 1962: 5; Singer 1973: 25) as well as its common use as a dwelling place of the kami (go-shintai) in Shinto shrines (Herbert 1967: 119; Ono 1962: 13,23; Holtom 1938: 11). Usually the New Year kagami-mochi consists of a large mochi at the base with a smaller mochi over it and a satsuma at the top of the pyramid. Often there are decorative leaves around the edges or base too: the satsuma and the leaves are also

components in the other New Year decorations placed above the front door (cf. chapter 6).

In households lacking a Kamidana, safety charms (fuda or mamori) are often kept in the tokonoma instead. Among some Aoyama and Sakurano households other 'religious' items may be kept in the tokonoma too, such as a hanging scroll on which have been stamped the seals of temples visited by the family. In several households the Butsudan is placed in a special cupboard adjacent to the tokonoma and in the Suehara family home their zushi is placed within the tokonoma itself, a practice similar to the placing of ihai there for certain ritual occasions in the village of Niike (Beardsley, Hall and Ward 1959: 454-6). In ways such as these the tokonoma has associations with 'religion' and 'the sacred'.

It is also always kept clean, neat and decorative, a 'physical' counterpart to its 'spiritual' purity. Essentially the tokonoma is an area which is not 'normal' (ke) and certainly not 'polluted' (kegare) but manifests characteristics of the 'pure' and 'sacred' (hare) in contrast to other areas of the house.

Entering a house again after a funeral one passes from a state of pollution (kegare) to one of ke, so in order not to pollute the house people usually throw over their shoulders a few grains of salt (symbolic of purification), which they have been given by the bereaved family in a special sachet along with a gift such as a hand towel (cf. Ohnuki-Tierney 1984: 25; Hashimoto 1962: 39). Salt is needed to wash off special pollution, but even when returning from work or school it is normal to wash one's hands in order to wash off the dirt from the outside

world (Lock 1980: 88)[5]. In a sense this is not dissimilar from entering a Shinto shrine, to the extent that many houses (33% of those in Aoyama) have a Kamidana, containing a symbol of a Shinto deity (fuda talismans being included in this category). Though there is some formal distinction between a Shinto shrine and a Kamidana, and between a Kamidana and a mamori charm or fuda talisman, these in effect create a continuum and all are symbols of, even residences of, Shinto deities. A tokonoma containing a safety charm is thereby made into a slightly more 'sacred' space in the house, not regarded as so highly 'sacred' as a Kamidana, which in turn is not so 'sacred' as a shrine, but still part of the same separation of social or sacred space.

In this sense the house itself becomes a 'sacred' area (hare, using the word now in terms of space, whereas the earlier definitions related more to time). Entering the house from the outside is a transition from ke to hare, from 'profane' to 'sacred', and involves not only the shedding of dirty shoes but a so the bringing of a gift if visiting the home of another person. The gift (o-miyage) is usually of food and is often specially wrapped by the shop where it was bought, but may equally be produce from the donor's own garden. Whatever its form, it is usually offered by the recipient first to the household altar and later consumed by the family. The same process of offering a gift received is practised for 'mezurashii mono' ('unusual items') by those with 'substitute Butudans' and the offering of a gift at the stand of dolls erected for the Girls Festival in March was observed during an interview with a lady who also had a Kamidana[6]. Such doll displays are

(5) The word kegare can also be used to describe physical dirt such as hands with mud on, or clothes which are dirty or messy.

(6) She offered at the Girls Festival display not only the gift brought by the anthropologist but also a gift brought by another visitor who called during the course of the interviews.

often erected in the tokonoma (cf. Norbeck 1954: 148, 150). Befu (1974) argues that the custom of offering gifts to gods and other supernatural beings forms the origin of the widespread practice of gift-giving, even though nowadays the practice of gift exchange is usually motivated more by social obligation (giri) and the need to conform to custom in order to maintain good relationships with one's neighbours. Nevertheless, a 'supernatural' or 'spiritual' side still persists in many households and the gift becomes an offering to the gods as well as a gift to the householder. The 'mezurashii mono' may be offered at a Kamidana, Butsudan or 'substitute Butsudan', either by the householder or (in the case of someone bringing condolences to a bereaved family) sometimes by the guest. Relatives visiting a household containing a Butsudan generally present the offerings and prayers themselves.

In all these ways, a visiting gift (o-miyage) is used as an offering to establish a relationship with supernatural beings, as is argued by the 'gift' theory of sacrifice (Hubert and Mauss 1964: 97, 100-101), but it also establishes a relationship with the householder. This aspect is the side which is brought into prominence by motivations such as giri and etiquette. In a sense, the bringing and giving of a material gift enables the transgressing of social boundaries from 'outside' to 'inside'. The distinctions between 'outside' (soto) and 'inside' (uchi), as between appearance and reality in social relations (tatemae and honne), are parallel to the ideas applied to other social groups versus one's own group (tanin and miuchi) and all involve a clear boundary (cf. Lock 1983: 12-14; Benedict 1946; Doi 1973: 36-8, 40-44). Areas that are 'outside' are dirty and potentially dangerous but those that are 'inside' are sacred and clean (cf. Lock 1980: 88). Gift-giving is one symbolic expression of the transgressing of these social boundaries because the material gift

can more easily pass where social beings are normally excluded, and thereby establish a relationship between the giver and recipient. This is especially the case when the gift involves food, because the barriers are further broken down through commensality, especially if the food is provided by both sides and both partake of the food given by the other (cf. also Befu 1974: 211).

Entering a house thereby involves a transition across social (and perhaps psychological) boundaries as well as between a symbolically profane outside and sacred inside. However, not all the inside is sacred and clean: some is polluting and dangerous, so that special precautions need to be taken with regard to these places or the crossing of barriers in the house between the unclean and clean.

The toilet is the most 'unclean' place in the house, so special slippers are kept there for use in the toilet only. They often have the word 'toilet' printed on them but even if not they are conspicuously different in colour and texture from other slippers used in the house, so that there will be no confusion of boundaries. Reactions to the transgressing of these boundaries are rarely observed, simply because from at least the age of two years, and, it seems, probably well before that, children have been socialised into regarding the bringing of shoes into the house or of toilet slippers into other rooms as a serious and 'dirty' act which must be avoided(7). Anecdotes from foreigners are consistent in indicating a strong Japanese feeling that it is abhorrent to take an item from the

---

(7) Reactions by two-year olds to the anthropologist's eighteen-month old son bringing in shoes from the genkan were of dismay and virtual horror and they made sure the shoes were returned to their proper place as quickly as possible.

toilet and use it elsewhere because it has become defiled and 'dirty'[8].

Western-style flush toilets in Japan not only often have an illustrated diagram explaining their proper use (for those used to the older, hole-in-the-ground type) but also very often have a kind of wash basin on top of the cistern so that as the cistern is refilled from a pipe the user can rinse his or her hands in the water before it passes through the hole in the basin into the cistern itself. Such an arrangement is not only economical in terms of water usage but is also a visible reminder of the need to wash one's hands after any use of the toilet[9]. In other cases where such an arrangement is not installed, a separate area containing a wash basin often provides a transitional space between the toilet and other rooms. Often the toilet slippers are used in this area too, but otherwise the slipper division can be between the toilet and wash basin area. An extreme case is a toilet at the headquarters of Ōmoto-kyo (a Shinto-derived new religion) in Kameoka, where the toilet area and wash basin area are both in the same room but are separated by a shallow step. Separate sets of slippers are provided for the toilet area and for the wash basin area, necessitating two changes of footwear between the toilet area and the outside world.

---

(8) One anecdote is from a missionary lady who walked out of the church toilet area still wearing the toilet slippers: her bringing 'polluted' or 'dirty' slippers into an area which is not only 'normal' (ke) but also to some extent 'sacred' (as a kind of hare place, in a Christian rather than Shinto context) provoked very strong reactions and she had to return the slippers immediately (Sarah McElligott, personal communication). Another anecdote is that a Japanese lady in England got interested in a book kept in the toilet of a British anthropologist and wanted to borrow it but could not bring herself to remove it from the toilet itself (David Turton, personal communication).

(9) To flush the toilet there is a choice of large or small quantities of water according to need, which is partly a reflection of the fact that water for domestic use is metered in Japan, so it is more economical to use a smaller amount of flush water for urinating. Nevertheless, hands are washed after both types of function.

The other location in the house subject to special care with reference to beliefs linked to purity and pollution is the 'devil door' (kimon). This is a part of the house determined by direction-lore (kasō), according to which the kimon is a direction from which special danger is liable to come and so special precautions need to be taken. In particular, the toilet and kitchen - i.e. places where water is used - should not be in the kimon or else disasters such as illness or accidents may befall the house. This suggests a partial connection with purity and pollution concepts, though one reason sometimes given for the avoidance of water in the kimon is that devils could enter the house through the pipes. A few houses also put salt in the kimon, a symbol of purification, which reinforces the idea that the kimon should be kept ritually clean. Spiritual purification was performed through an o-harai by a Shinto priest in the kimon of at least one house in Aoyama at its construction. Hendry (1981: 217) reports also the 'practice' of placing a Kamidana or Butsudan in the inside corner next to the kimon, the Kimonzumi, as further spiritual protection. However, it is the outside corner (kado, distinguished lexically from the inside corner, sumi) which is the focus of ritual practices such as the planting of certain shrubs or trees in the kimon, as will be detailed further in chapter 8. For the present purpose it is sufficient to note the presence of one or more areas of the house[10] subject to special prohibitions

(10) The kimon known by most informants is the ura kimon (rear kimon) to the north-east, and apparently this was the only one known to Dore (1958: 367-9). However, another kimon lies to the south-west, the omote kimon (front kimon), and if a house has a diagonal boundary rather than being in a square or rectangular plot the diagonal may also form a kimon along its whole length. It might be that Ueno informants were confused about the nomenclature or there are local variants, because Hendry (1981: 217) refers to the south-west corner as the ura kimon of a house in Kyushu.

and ritual observances very similar to attitudes connected with purity and pollution.

Inside the kitchen there are also discrete boundaries in the use of kitchen cloths: they are carefully separated so that each cloth has only one specific function, and using a cloth used for cleaning a sink in the place of one used for wiping the stove or kitchen table is 'a cause for great concern' because 'boundaries have become confused' (Lock 1980: 89). Lock continues to observe that her informants state specifically that 'their concern is not about bacteria but about something else, which they can only describe as "dirt".' She also notes that strong sanctions against children biting their nails or sucking their fingers is not because these habits are thought to be childish but because of a fear of "dirt"; similarly children are 'warned not to touch things and are admonished against exploring the environment, because it is "dirty" and "dangerous" ' (ibid.,pp. 89-90). In a number of other ways children are taught 'to fear dirt and to make clear distinctions between what is clean and good and what is dirty and bad', ideas not based on bacterial theories of infection but essentially Shinto-derived values. (ibid., p.91).

The practice of frequent baths may be related to purity and pollution attitudes to a certain degree (Ohnuki-Tierney 1984, ch.2). Most people bathe at least every other day, many daily and some twice a day. Very hot baths are the rule, partly because those that induce sweating are thought to be therapeutic as well as relaxing, in so far as "dirt" from inside the body can be eliminated. This is the metaphysical kind of "dirt" mentioned above and relates to Shinto concepts of purity and pollution. Although one element in the taking of a bath, it should not be overstressed, because there are at least six other benefits which

may be associated with bathing in Japan, namely[11]:

1) Physical (as opposed to metaphysical) therapy, in the relaxing of muscles and helping to relieve stiff shoulders and aching backs.

2) Hygiene.

3) Warming up of the body, especially in winter, when traditional houses have relatively little heating. This is particularly the case for baths at night before sleeping.

4) Social benefits, the opportunity to talk and hear the latest gossip at public baths, especially in rural and older urban housing areas.

5) Privacy (the converse to point 4) in urban apartments or other congested housing where the bath is the only place one can be alone at home and relax for an extended period.

6) A social 'boundary marker' between day and night.

(Ohnuki-Tierney 1984, ch.2)

Nevertheless, the attitude towards the bath as a place to be kept scrupulously clean is reflected in the style of bathing by which one washes thoroughly with soap outside the bath, which is rinsed off with bowls of water, before the main long soak in the bath[12] (cf. Hendry 1981: 41, for example). The bath therefore is a locus of physical cleanliness 'par excellence' and is comparable to the position of the tokonoma for 'social' purity. Since the tokonoma also contains the mochi at New Year which were originally dedicated to the God of the New Year (Befu 1974: 210) and also is not infrequently the locus of Shinto talismans, it becomes a kind of occasional Kamidana which may have replaced the

(11) I am grateful to Dr. Patrick McElligott for pointing out some of these features.

(12) There may be an initial soak in the bath for just a few minutes, but the main removal of the physical dirt by the use of soap is outside the bath rather than within.

former 'toshidana' god-shelf for the God of the New Year (cf. Yanagita 1970), and as such has a semi-sacred (hare) character which stands opposed to the semi-polluted (kegare) character of the kimon from which evil spirits might enter. The dichotomous pairs of places in the house are completed by the genkan, a place for the leaving of outside dirt carried on the shoes, as depicted in the following schema:

Fig. 5.1

	PHYSICAL	SPIRITUAL
'CLEAN'	BATH	TOKONOMA (or Kamidana in some houses)
'DIRTY'	GENKAN	KIMON

All houses contain a tokonoma even if they do not contain any Kamidana or Butsudan; modern apartments often do not have a tokonoma and residents in them are exempt from concerns about kimon simply because they do not own the property(13). Some older houses do not have baths but all have a genkan. Formerly many toilets were outside the house in a separate shed but in urban areas they are more usually inside the house, whether flush type or otherwise. However, like the genkan, their boundaries can only be transgressed by the changing of footwear, so they have now become partially assimilated to the genkan in the schema of Fig. 5.1 - that is they are both "dirty" places outside of the 'house proper' which both require the putting on of footwear not worn in the main parts of the house. The restrictions on footwear relate to the dichotomy pointed out by Ohnuki-Tierney (1984: ch.2) whereby what is 'above' is pure and what is 'below' is polluted, so that, for example, clothing worn above the waist is washed separately from that worn below the waist.

---

(13) A rite to appease the local deity (jichinsai) is normally performed before apartment blocks or any other buildings are erected, but I have not yet come across cases of the owners being actively concerned with the kimon of property rented to others.

The schematisation in Fig. 5.1 can therefore be given a new dimension of 'outside' and 'inside', whereby the kimon and genkan or toilet are "dirty" and "outside" the living space of the house, contact with which involves particular care or prohibitions:

Fig. 5.2

	PHYSICAL	SPIRITUAL
INSIDE	BATH	TOKONOMA
OUTSIDE	GENKAN OR TOILET	KIMON

The bath, however, is ambiguous in so far as traditional public baths are outside the house but 'inside' the 'social space' of the community, whereas modern baths are inside the house but 'outside' the 'social space' of the family. Its association with water, however, continues to put it in direct opposition to the kimon, but this is also true of the kitchen (daidokoro), where water is used but which in many traditional farmhouses was an earthen-floored area adjacent to the main part of the house, involving the removal of outside footwear when coming from the kitchen (Dore 1978: 30-31, 67-8). Therefore in older style houses all these areas were separate from the 'house proper' except for the tokonoma (and most such houses would have had a Kamidana too), which tends to confirm the idea that entering the house is entering a sacred (hare) area from which ke or kegare phenomena should be excluded.

In modern houses, however, these 'peripheral' areas (though nevertheless essential for daily living) have been brought within the confines of the building itself but internal boundaries remain strong. These boundaries are reinforced not only by the symbolism of footwear and of sitting positions in a room with a tokonoma but also by the rules concerning kimon in those households still observing direction-lore[14].

(14) The extent of these practices will be discussed in chapter 8.

Not only should all rooms using water, such as toilet or kitchen, be kept away from the kimon but ideally the genkan should also be kept separate from either the ura or omote kimon. The tokonoma is automatically kept away from the kimon by the former being inside the house and the latter on an outside corner or wall. Spatial and footwear boundaries automatically keep the genkan, toilet, bath and tokonoma rooms distinct, so that the incorporation of kimon rules ensures that all these places are kept well separated from each other. The distinctions demonstrated by Douglas (1966) for other cultures equally apply to Japan, whereby "dirt" becomes 'matter out of place'; Ohnuki-Tierney (1984) has also shown how the 'dirty outside' pollution is kept rigidly separated from the 'clean inside' where some kind of 'purity' needs to be strictly maintained.

These physical boundaries are reinforced on a social level. Callers to the door, including not only tradesmen but also general acquaintances and often those who might be regarded as friends, are kept in the genkan if they call round unexpectedly. Such conversations in the genkan between neighbours have been observed to last sometimes over half an hour without the neighbour being invited further into the house, though there are differences between individual personalities in this regard. Generally it is only when a formal invitation or appointment has been arranged in advance that the guest is invited into the house, though there can be exceptions among some closer friends. This behaviour is largely a product of the idea that one's house must be meticulously tidy and clean before a guest enters, some housewives going to considerable trouble to prepare the room before the expected guest arrives. Nevertheless, it is conventional to apologise for one's "dirty house" to the guest.

Reinforcing the social separation of the genkan is the fact that in many homes it is impossible to see further into the living areas

from the genkan, either because of a bend in a corridor or the presence of doors. Where this is not the case, a hanging curtain (noren) is often hung between the genkan and the rest of the house (or sometimes in front of the doorway itself in old, traditional houses) during the summer when the internal partitions might be removed. The noren curtain has vertical splits to allow the passage of air but is effective in preserving privacy(15).

Middle-class houses, particularly some of the larger ones in Aoyama, have a specially separated formal guest room in traditional style containing the tokonoma where guests are entertained around a low table while sitting on low zabuton cushions on the tatami mats. This room is kept always neat and tidy because the family normally use another room (often in Western style with a sofa or armchairs, carpets and television) for ordinary daily living. Adjacent to this room is normally the kitchen, but the hallway corridor leading from the genkan often separates this side of the house from the formal guest room. This means that guests can be taken directly from the genkan across the hallway to the formal tokonoma room, which frequently is the room immediately adjacent to the genkan, its doorway being separated from the genkan by only a yard or so of corridor. Guests are therefore kept segregated and do not enter the ordinary living areas of the family and especially not the kitchen, which is frequently the room furthest from the genkan.

Whereas the tokonoma room is specially kept clean, the kitchen is not infrequently untidy and even dirty from accumulated layers of grease from the frying of foods like tempura(16). Guests are strictly excluded

(15) A counterpart to the noren may be the sliding concertina-like partitions which often separate off the wash basin area from which the toilet often leads off on one side and the bath room on the opposite side. The whole area is separated from the rest of the house by the sliding doors, or even normal style doors, into the wash basin area.

(16) Sliced fish or vegetables fried in batter.

from the kitchen, which is the domain of the housewife, and even a husband who helps his wife with kitchen chores may be referred to disparagingly in some more conservative circles as a 'cockroach husband' (gokiburi teishu), who is 'out of place' in the kitchen.

c) Health and Hygiene

Reference has already been made to the therapeutic properties of Japanese baths, on both physical and metaphysical levels; this and some of the concerns about kitchen cloths relate to the ideas of "dirt" which, even if not identifiable with bacteria or biological infection nevertheless blend into the general concepts of health and hygiene. A gauze mask is frequently used to cover the mouth and nose when one has a cold or is afraid of catching an infection which has been going around the area (cf. Ohnuki-Tierney 1984, ch. 2). Such masks may be necessary in part because of the congested trains and buses where infection can easily be spread, in addition to which the etiquette that it is better to sniff than to blow one's nose in public might be linked to such circumstances to at least some extent. However, the wearing of the gauze mask in public also has the effect of signalling one's polluted state but at the same time allowing one to remain functioning socially 'though suitably demarcated' (Lock 1980: 91).

Concern about catching colds is manifested in other spheres of social life. A fairly common final comment in letters may be translated as "please don't catch a cold" (kaze o hikanai yō ni shite kudasai). Certainly a cold is a sufficient reason for a visit to a doctor or cancelling an appointment, even if the cold may appear to be very mild. The infected person is thereby in a state of pollution and needs to take special precautions.

More serious diseases such as tuberculosis and some types of cancers, as well as mental illness, colour blindness and contact with atomic bomb radiation may be sufficient reason for a prospective marriage to be called off, even if the prospective partner is merely a descendent of the person who has one of the above illnesses etc. and has no history of any such ailments personally (Hendry 1981: 135; Lock 1980: 90-91). In Ueno City corporation vans come each year around suburban housing estates offering an X-ray service by which stomach cancers can be detected in their early stages(17). Since some of these illnesses are considered polluting or shameful, most families are very reticent to specify exactly what kind of an illness a particular member may have contracted. Certainly this is true of cases of tuberculosis, skin cancer and breast cancer among some Ueno residents. Even when the neighbours knew that a person was ill but did not know exactly the type of illness involved, they were often reticent to acknowledge to the sick person's family that they knew a family member was hospitalised, since such an admission would involve not only the obligation to visit the person in hospital (mimai) or send a gift, but also the reciprocal obligation for the sick person's family to bring a return gift once the family member has returned home from the hospital. Therefore marriage into families with these kinds of illnesses produces pollution of the family 'blood' or 'stock' (kettō) and are to be avoided as much as marriage to outcaste groups like the burakumin or Koreans (Hendry 1981: 134-5). Marriage creates bonds where formerly there were boundaries, and so the removal of a boundary is a cause for great concern lest pollution should enter. Polluted categories of people, whether from disease or ethnicity, are identified as far as possible

(17) Stomach cancer is particularly feared, as illustrated by the woman who after a serious row with her husband was very tense for a few days and experienced stomach and digestion pains. Her immediate fear was lest it might be stomach cancer and she went straight away to a doctor to have an expensive check-up.

before a prospective marriage takes place because such marriages can bring 'contamination' and defilement to the family (Hendry 1981: 133ff.): this too is a further application of the principles outlined by Douglas (1966) showing the importance of boundaries in maintaining categories of 'pure' and 'impure' in social life.

Another sphere in which illness can be linked to concepts of purity and pollution involves attitudes to medicine. Mahikari, one of the new religions, regards medicine as 'poison' and actively discourages its members from taking medication (Davis 1980: 22,24,36ff.). Very similar ideas are expressed in the attitude that herbal medicine has fewer side-effects than cosmopolitan synthetic medicines, and is one of the main reasons for the increased use of East Asian medicine in recent years (Lock 1984: 10-12)(18). Therefore medicine can also come to be seen as 'polluting' in certain contexts. These attitudes to medicine will be further discussed in chapter 9, when some case studies of reactions to certain types of illnesses will be presented. It is sufficient to note in the present context that attitudes to purity and pollution carry over from metaphysical concepts of "dirt" to physical concepts of disease and contamination. In both cases the pollution is dangerous and needs to be kept in its 'place' by the rigid enforcement of boundary maintenance in the same way as Douglas (1966) has described for other cultures. The fear of iatrogenic illness also affects these attitudes to the extent that in an extreme case medicine can be regarded as 'poison'(19).

---

(18) Nevertheless, Lock notes that the recent prescription of herbal medication by doctors trained in Western medical methods has brought about side-effects through the ignoring of traditional methods for the selecting, mixing and prescription of herbal medicine and prescribin the herbal medicines as though they were equivalent to synthetic drugs (1984: 13-16,20).

(19) A similar demarcation of boundaries can be seen in the list of foods which should not be eaten together, featured in almanacs sold at major shrines (Lock 1980: 97), and which might have been to some extent influenced by the yin/yang theory.

d) Food and eating utensils

Since bacteriological illness can most easily enter the body through the mouth, those utensils which can be used to convey food to the mouth are often personalised among Ueno families so that each family member has his or her own utensils which are never used by any others. This applies to chopsticks, tea cup and rice bowl, each of which have distinguishing patterns or sizes[20] by which they can be identified and allocated to family members. The rice bowl is included, it seems, because sometimes rice remaining in a bowl towards the end of a meal is mixed with tea to make ochazuke, and the resulting mix is drunk directly from the rice bowl[21].

Guests are given special chopsticks called waribashi, consisting of a single piece of wood split most of the way down the centre to form two chopsticks joined at one end. Each unit is supplied by the shop where they are bought already wrapped in an individual paper sheath, and is later presented to the guest in such a form without being removed from the wrapping. It is the guest who removes the waribashi from the sheath, breaks apart the two chopsticks where they are joined and uses them for eating. After the meal they are thrown away, because by their very nature waribashi can be used only once in a fresh state and once used are never given to another guest since it would be obvious that they are no longer unused. After the meal all plates and dishes are washed up scrupulously in strong washing up liquid, rinsed at least

(20) Sometimes a husband and wife can have the same style of cups or chopsticks which are distinguished by the husband's being larger.

(21) Rice also has great symbolic importance in many other contexts which may influence the personalisation of rice bowls too: cf. Itō (1983a) for some discussion of the importance of rice in rural areas.

twice afterwards to ensure cleanliness and are left to drip dry[22]. The sides of the sink are wiped round with the particular cloth used for that purpose and other surfaces each with their own special cloths. As indicated by Lock (1980:89), the concern is not so much with physical as with metaphysical "dirt", and in this way relates to the general concern with purity and pollution in domestic life.

Food is always wrapped up securely, partly as protection against the cockroaches which in the summer are found in almost all Japanese houses and many lower-level apartments[23], but partly also reflecting a general concern with wrapping in Japan. Despite the efforts of some groups who have protested against the waste involved (McKean 1981: 109-110), often two or three layers of packaging are used in marketing and selling goods.[24] Shopkeepers provide free plastic carrier bags for their customers; gifts are wrapped up by the department store in its own wrapping and are presented in that form to the recipient (because there is status in giving a gift bought from a prestigious store) and shop girls are specially trained in ways of wrapping the parcels. Books detailing traditional methods of wrapping various items are sold in book-shops, and two by Oka (1967 and 1975) have been translated into English under titles such as 'How to Wrap Five Eggs'. All this concern with packaging

---

(22) Japanese who have visited British homes have sometimes commented that they considered English methods of dish washing to be insufficient and the use of tea towels to be suspect for hygienic purposes.

(23) Hokkaido is an exception because it is generally too cold for cockroaches.

(24) Part of the prosperity of Nissei comes from its manufacturing cellophane film for food packaging.

might be connected indirectly with ideas of purity and pollution, and more directly with the related concepts of outside and inside, tatemae and honne, the external packaging being regarded as almost as important as the internal content[25].

There are therefore certain consistencies between attitudes to house arrangements, health and hygiene, the latter expressed also in eating habits, revolving around the ideas of purity and pollution in everyday life. The brief discussion on these given above has focussed on manifestations of these largely in the 'non-religious' sphere except for references to the kimon and tokonoma. These same, or very similar, attitudes towards purity and pollution are also to be found in religious contexts, as has been noted briefly with regard to Shinto shrine worship. However, most residents of Ueno (and of Japan generally) are affected by the religious aspects of purity and pollution when they participate in rites of passage. Since more detailed descriptions of many of these are available elsewhere[26] only some of the elements dealing with purity and pollution will be mentioned in the following brief summaries of some of the rites.

Rites of Passage

Two types of rites of passage can be distinguished: annual festivals marking the passage of time in an agricultural cycle or a

(25) It is extremely difficult to assess the relative values placed on packaging versus content, but in some cases it almost seems as if the packaging becomes even more important than the content, such as when some Aoyama families pay for an appliance such as a television or furniture to be delivered by a prestigious store in its own van, even though the price is far higher than that charged by a local store for exactly the same product.

(26) A very useful source which describes not only marriage but also many other rites of passage is Hendry (1981, chapters 5 and 6). Other accounts of rites of passage in rural areas may be found in Embree (1946, chapters 6 and 7), Beardsley, Hall and Ward (1959, chapter 11), Norbeck (1954, chapter 6) and Smith (1956, chapters 7 and 8). Some ceremonies performed in a Japanese company are also analysed by Rohlen (1974, chapter 2).

community's ritual year, and rites of passage in the individual's life-cycle such as birth, marriage and death. The latter rites are those normally considered as rites of passage, and were the principal foci of Van Gennep's (1960) original treatise on the subject. They focus on one individual or a group of individuals who undergo a transition from one status to another during the course of their life-cycles, and in many cases the rites are once in a lifetime experiences by any individual participant. The first type, however, though discussed only relatively briefly by Van Gennep (1960: 3-4, 178-18) might be seen as rites of passage for the community as a whole. Even if they are repeated at annual or less frequent occasions, the membership of the community as a whole has often changed during that time, through births, marriages and deaths, so that, in a sense, it is not exactly the same group which undergoes the rites even if the majority of members remain constant. Moreover, the year itself is different, and this is particularly felt in areas like Japan where each year is accorded a different name by the Chinese animal zodiacal calendar. Since some of these rites are associated to some extent with purity and pollution practices, they will be included in the following discussions of rites of passage.

New Year

In the week or two before New Year all householders in Aoyama and all residents of Sakurano have a special clean up of their houses. This annual equivalent of a 'spring cleaning' is when the whole house is cleaned up far more thoroughly than at any other time, including the cleaning of fly-screens (amido), scrubbing of the genkan and garden path and some clearing out of unwanted items around the house. Many husbands help their wives with some of these chores at the weekends or after their factories have closed for the New Year holiday. There is a

feeling that outstanding debts should be paid off before the New Year (Bownas 1963: 40), althogh this applies more to personal debts between individuals rather than to the heavy mortgage or other debts which many families owe to impersonal finance companies. Nevertheless, this too is a reflection of a desire to have all the obligations of the old year settled and dealt with before the new year comes, and to have all 'clean' both physically and socially, in preparation for New Year.

Spiritual cleanliness or renewal is said to come from the chiming of the temple bells 108 times (symbolising a removal of the 108 sins recognised by Buddhism) from midnight until about 1.30 a.m. or later on New Year's Day. Many people attend the temples at this time(27) to pray for a safe and healthy year(28) and to ask for their hearts or spirits to be "washed" or "renewed". Many more go on New Year's morning for this purpose to Shinto shrines - 77.5% of the Ueno respondents doing so in 1981 - and many shrines and temples place advertisements at local stations and elsewhere encouraging people to come at New Year to 'wash the heart' (kokoro o arau).

This symbolism of 'washing' is only applicable to those who are not ritually polluted, however, such pollution (kegare) coming from the death of a close relative during the previous year. Even though

---

(27) Exact statistics for this practice were not obtained, but an estimate for Aoyama residents in 1981 is about 10%, though not all members of these families went. Many Sakurano families were away visiting relatives at the time, so estimates are more problematic for that area. However, the sound of the Nishiyama temple bells could be heard in both estates, and most of those who did not participate personally watched live broadcasts of it from famous temples on television.

(28) Some pray more specifically for other matters, such as a boy who prayed that he would find a good wife, and gave an offering of five yen, pronounced go-en, because go-en also means an 'honourable relationship' or 'honourable karma', the 'honourable relationship' being marriage.
An attraction of one temple in Ueno is that the worshippers can line up to ring the bell in turn, and may go to this temple simply for the attraction of this experience, although several at the end gave up waiting as the queue was too long.

Shinto priests in urban areas have no idea whether or not most of their worshippers have experienced the death of a relative in the previous year and allow anyone to come to worship who wishes to do so, at least four of those interviewed about New Year rites did not go because of ritual pollution. These four were all men and the relatives who had died were a father, a maternal grandmother and a maternal grandfather. The final case involved not a recent death but the 33rd hōji for the man's mother, but this was also viewed as causing ritual pollution. To some extent their non-participation in shrine visits was on account of respect for, or fear of, the attitudes of others, as expressed by the shataku apartment dweller whose father had died and who said he would not normally pay much attention to the ideas of ritual pollution "but others around here would think it odd if I went to a shrine, so it's better not to go, for the sake of appearances". The taboo on shrine visits was in fact broken by the unmarried sister of the man whose maternal grandfather had died: she works at a department store in Osaka and after work went along with a group of other salesgirls on a midnight visit to the Yoshida shrine in Kyoto, afterwards staying the night at a friend's house in Kyoto before returning the following morning to her family in Ueno. In a situation where group pressures to conformity make it easier to go along than to observe the pollution taboo, and where the dead relative was not regarded as close kin, the rules were waived out of convenience. Moreover, neighbours or relatives who would know of her having broken the taboo and might be critical of it were not present at the Kyoto shrine to see the act. The family later joked about her breach of taboo, saying that if she had received any 'bachi', divine punishment, for her entering the shrine in a polluted state then it would also, they said, have affected all the others there in what they

called a "domino effect"[29].

A related restriction on participation at New Year is the prohibition on sending New Year cards (nengajō) if there has been a death in one's family or among one's close relatives during the previous year. These decorated postcards are all delivered together in a thick pile held together by a rubber band on New Year's morning, the post office having collected together all the cards posted to each family over the previous few weeks. However, families in which there had been a death send out instead a card with a black or grey border explaining that they are unable to send nengajōs that year to all those to whom they would normally send cards, and these apology cards are delivered in the ordinary post prior to New Year. In this way the cards from 'polluted' persons are delivered separately from the normal nengajōs delivered on New Year's Day.

Those who do not visit shrines or temples at New Year and are not ritually polluted include Christians or Sōka Gakkai adherents who may visit a church or Zadankai instead. Others might go if they have relations staying with them at the time, or are visiting relatives, but at other times may prefer to just sleep and rest at home.[30]. Nevertheless most of these have performed New Year shrine visits in the previous few years, as revealed in the interviews with them, and hold no antipathy to shrine visits. Even if they do not go in a particular year -

---

(29) Theoretically the bachi would be limited to the transgressing individual or her household, but here it is viewed as involving a community of worshippers who would be affected by the transgression of the individual, even though the family involved in fact denied any such belief.

(30) A common expression for such people is that they have a 'sleeping New Year' (neshogatsu).

their decisions being influenced by the state of the weather among other factors - they may go in other years. Partly this is because New Year is the only time when all department stores and shops are shut, so that shrines in scenic places are often the only places to go for family outings. Those who go to shrines for 'sightseeing' purposes nevertheless normally do stop to put their hands together for a moment to pray and may put some money into the offering box (Graburn 1983: 18-25). A large proportion of the Japanese population as a whole perform New Year shrine visits - 56% of Morioka's (1981) nation-wide sample - but over 75%(31) of the Uero sample had done so that year. When 55 of those who had done so were asked about their motives and attitudes, the following principal(32) replies were obtained:

Table 5.1 Attitudes to New Year shrine visits.

		Number of cases
(a)	To pray for safety or happiness in the coming year:	14
(b)	To pray for the safety of a child:	1
(c)	A "custom because everyone else does it"	13
(d)	"To celebrate the New Year" or "taste the New Year atmosphere":	6
(e)	"To make a distinction (kejime) between the years":	8
(f)	"To wash one's soul":	3
(g)	"Something bad might happen if I don't go":	3
(h)	Others:	7

Some of the attitudes mentioned under 'others' include references to recreation or the use of leisure, such as the woman who said there is nothing else to do when all the shops etc. are shut at New Year and "I'd go crazy if I stayed at home!"

Of the main attitudes mentioned, only 18 out of 55 refer to a particular intention to pray(33), and one of these is that of a man

(31) 77.5% of the 658 people who answered this question, or 76.5% of the total sample of 667.

(32) There was in practice some overlap of categories, but these classifications are based on the first (and presumably principal) motive mentioned.

(33) This is not explicit but implicit in the replies of the three people in category (g), who go to be 'on the safe side' fearing a possible misfortune in the coming year if they did not go.

who goes to pray for the safety of his daughter rather than himself "because it's boring for me". Another eleven (listed under (e) and (f) in table 5.1) refer to concepts associated with purity and pollution - either "washing" of one's soul or making a 'distinction' or 'stage' (kugiri) in the life-cycle and ritually separating the years, but the idea of prayer is apparently not foremost in their minds. The others (categories (c), (d) and (h) in table 11.2) refer more specifically to the recreational side of the events, the "New Year's atmosphere" or the feeling that they should join in what everyone else is doing.

Three of the five people who referred at some point in their replies to having their souls "washed" at New Year principally spoke in terms of the New Year being a "distinction" (kejime) or "stage" (kugiri) marking the boundary between the old and new years. These expressions, like those referring to a "washing" of the soul, are clearly related to purity and pollution concepts. As Douglas (1966) and Leach (1976: 33-6) have argued, it is necessary to maintain clear and distinct boundaries between categories and areas of overlap may be viewed as in some sense 'dangerous' because they are 'ambiguous', or, in Turner's (1969) vocabulary, 'liminal'. If 'matter out of place' is "dirty" or even "dangerous" (Douglas 1966), then something as fluid as time or a continuous process such as a life-cycle upon which markers such as years or generations are imposed by society require definite boundaries as markers of constituent units. Since the year is a particularly important unit of time, in accordance with which economic events in the agricultural and business cycle are calibrated, and the years of a person's life are reckoned - another important concern in Japan - then the New Year festival provides a major ritual boundary with far-reaching social effects. It is, therefore an important 'stage' (kugiri) which marks a distinction (kejime) between the years.

Setsubun

Before the adoption of the Gregorian calendar in 1872 the last day of winter (Setsubun) and beginning of spring marked the commencement of the agricultural cycle for most farmers(34). This date was therefore a kind of New Year too, though it now falls between the 3rd and 5th of February most years, as calculated by the older lunar calendar and printed in almanacs sold at shrines. With the relative decline in the importance of agriculture among urban residents, the significance of Setsubun may have become attenuated, although even rural areas do not seem to attach a high degree of significance to some of the Setsubun rites, in so far as one can judge from the relatively few references to Setsubun rites in ethnographies such as those by Embree (1946), Smith (1956), Beardsley, Hall and Ward (1959), or more recent studies by Dore (1978), Smith (1978) or Hendry (1981). However, in the Ueno sample the only families among those interviewed who observe Setsubun in a more 'serious' or 'religious' manner are all from rural areas as first generation migrants. The term 'religious' is justified by the fact that they go to Shinto shrines for a specific purpose each year at Setsubun whereas most families rarely, if at all, go to shrines specifically because of Setsubun.

One of these is the Ikeda family, the husband of which is the professional bicycle racer. At Setsubun each year they visit a famous shrine on Mount Hiei, Hiyoshi Taisha, bringing with them the husband's bicycle to have it ritually purified by an o-harai ceremony,

(34) Setsubun is the end of winter, but the following day as the beginning of spring in 1982 was the first day of the horse (Hatsu-uma) when many companies and merchants pray for safety and prosperity for the year just commencing, as described in chapter 12.

at a cost of 5,000 yen[35]. They regard Setsubun as "more important than New Year" for shrine visits and it is at Setsubun that they buy their safety charms for the coming year, one of which the husband always wears round his neck when competing in races, whereas most other families buy their charms at New Year. Another Aoyama resident, Mrs. Yoshida, visits each year one of the major shrines in Ueno in order to try to catch one of the rice-cakes (mochi) thrown by the priests to the crowd at that time, but so far she has been unsuccessful. She says that it would bring her considerable luck if she were to catch one[36]. Another Aoyama lady goes to a shrine each year at Setsubun to buy beans which she offers at her Kamidana during the day, after which her family use them in the customary rite performed in the evening which is practised by virtually all the families interviewed, including also Christian and Sōka Gakkai families[37].

The details of this rite differ from family to family but essentially it involves the throwing of beans and shouting "Out with the devil and in with good fortune!" ("Oni wa soto, fuku wa uchi")[38]. In some houses each family member throws the beans in their own rooms (the husband in his study, the wife in the kitchen, children in their bedrooms

---

(35) It went up in 1984 from the former charge of 3,000 yen.

(36) The Ueno Jingū, the largest shrine in the city, has a similar rite involving the priests throwing beans which those watching the rite rush to pick up "for luck". Most of them are children with their mothers, about 300 in all in 1982, who seem to have gone mainly for the entertainment, as far as can be judged from outward appearances. This contrasts with the many thousands who go there at New Year so that the whole precincts are crowded for the whole day with visitors coming and going.

(37) Some couples had not done so before they had children but did so afterwards.

(38) According to Michael Pye (personal communication) in some areas of Japan the order of the expression is reversed, but neither of us know of any significance in this variation.

and all collectively in the living room); in others all together throw the beans out of the windows into the garden (for "out with the devil") and might also throw some into inner parts of the house (for "in with good fortune"), while in those families with younger children one family member (often the eldest son, otherwise the father, sometimes a member born in a year with the same animal by the Chinese cycle) puts on a devil mask made by the children at kindergarden or primary school and tries to dodge the beans thrown at him (or her) by the other family members. Afterwards, in all households, all the family members eat the number of beans corresponding to his or her age[39] that year - like the impersonation of the devil by those born in the same animal year, this is another indication of the importance attached to age in Japan and of the similarity between Setsubun and New Year, when traditionally all family members added another year to their ages.

The usual attitude towards Setsuban, expressed also by Sōka Gakkai adherents and some Christians, is that it is "a game", "recreation" or "play/fun". Many view it as a "custom" but hardly any (except those who visit shrines for it) see it as in any sense 'religious'.

Of the universal features of Setsubun, the eating of beans is related to age[40], but the others (throwing of beans at a caricatured or imagined devil and shouting "out with the devil" etc.) are concerned with the driving out of evil. As such, it is very similar to the New Year 'lion dance' performed in the first two weeks of January in many older parts of Japan (including the older parts of Nishiyama) but not in Aoyama or Sakurano, whereby men dressed in demonic-looking lion masks, accompanied by a musician, visit shops and houses to perform a ritual exorcism by dancing

---

(39) Some informants over the age of 40 or 50 say they no longer eat exactly the number for their age because it would be too many - or they would "get fat".

(40) The custom in some families where someone born in the same animal year as the relevant year is also associated with age and might be connected with yakudoshi beliefs.

in front of the building to drive out demons. The amount of time spent on it varies according to the amount of money given by the householder or shopkeeper, but on a ritual level it has the same overt purpose as the Setsubun rites. In this way, the purifying elements of New Year and Setsubun as the beginnings of a new year are closely linked and form further examples of the incidence of purity and pollution rituals in Japan.

The connection between annual ceremonies (nenchūgyōji) and purity and pollution attitudes is seen most clearly for New Year and Setsubun as marking the commencement of another year. Other events are more often described as simply 'nenchūgyōji' rather than as 'stages' (kugiri)(41) or 'distinctions' (kejime), but sometimes these latter words are used too. Since many of the annul ceremonial events (nenchūgyōji) are connected to some extent with Shinto, connections with purity and pollution are often a result of Shinto emphases. Hence the man in charge of leading Shinto festivals (matsuri) is required to undergo the same period of ritual purificatory asceticism as are the Shinto priests, including abstinence from sexual intercourse (Itō 1983b: 254-5). Similarly, a man at whose house a float is kept is disqualified from performing official duties if he has been ritually polluted by the death of a close relative(42), but such features of the festivals apply only to the key participants rather than to the majority of the population. Most people are affected by the purity and pollution aspects of their own life-cycle rites, however, and these will now be briefly discussed.

---

(41) Kugiri 区切り) means a pause in actions, movement or behaviour before going on to a new stage or set of actions. A homonym (kugiri 句切り)) means punctuation or a pause in writing, or finishing a work, but the two similar words are distinguished by the use of different characters in the written forms.

(42) Eisei Kurimoto, personal communication, citing the actual case of his uncle to whom this happened, but in fact the uncle's relative died so close to the time of the festival that there was no time to arrange a substitute, so the uncle did take part despite the death in his family.

'Red' Pollution: Birth, Menstruation and the loss of virginity

As an event involving blood, birth is subject to the 'red' pollution, though sometimes it is called the 'white' uncleanness (shiro fujō) to distinguish it from the 'red' uncleanness of menstruation and the 'black' pollution of death. The degree to which a mother is regarded as polluted varies considerably from area to area, her transition from 'kegare' to 'ke' often taking place on the fifteenth day, perhaps marked by a simple ritual such as thorough washing of her hands, though some Kansai districts regarded the pollution as lasting for thirty days, while other areas of Japan had a polluted period of only seven days (Bownas 1963:68). Among urban informants in Ueno, customs connected with childbirth are not regarded as connected with purity and pollution but as medical advice. Most mothers are forbidden from getting out of bed (except for vital functions and to feed the infant) for a period of at least a week and normally two weeks after giving birth. They are told not to read, write or watch television because the eyes are said to be adversely affected by such activities in these first few weeks after childbirth(43). The mother is normally at her parents' home or has her mother or another female relative staying with her at this time to look after her, and even if she is allowed out of bed after two weeks she is not allowed out of the house until three or four weeks after the birth in most cases. Restrictions on the mother's movements and prolonged bed rest are medically advisable, but it would seem as if some of the periodisation and perhaps restrictions on all activities other than child care are latent manifestations of former purity and pollution concepts.

Similarly, the husband is virtually never present at the birth

(43) Some women do break these rules after a few days or a week, out of boredom, but may be criticised by others for doing so. (Oto (1963: 46) lists other folk beliefs associated with foods eaten during pregnancy).

itself, though this is beginning to change in a few hospitals, and it may be that this also reflects some attitudes to purity and pollution, considering how formerly many villages had special parturition huts separate from the main houses, which were also sometimes used for menstruating women (Befu 1971: 106; Bownas 1963: 65-66)(44). However, in some traditional villages the husband used to assist his wife during labour by supporting her back, but in other villages men were excluded on the grounds that if a man were present all subsequent labours would require the presence of a man or the labour would be extremely hard, according to one folk-belief (Oto 1963: 47). In modern Japan, depending on the distance between the husband's work place and the home of his parents-in-law, he may be able to visit his wife and child only every fortnight (in some cases), each weekend in other cases and sometimes more frequently. For the first child (usually a boy) he is more likely to be present at the miyamairi ceremony than for subsequent children; this ceremony marks the final transition from a kegare to a ke (or ke to hare) state of ritual purity.

Menstruation as another form of pollution by blood is not normally regarded as specifically 'polluting' in a ritual sense since many residents of Ueno do not even know about the former practice of forbidding menstruating women from entering Shinto shrines. However, some ambivalence towards menstruation is shown in the way in which girls are not usually warned about the onset of menstruation by their mothers(45),

---

(44) In a rare case, involving a god of birth and safe delivery, the parturition hut could even be inside a Shinto shrine (Namihira 1976: 357) but normally this would involve tabooed contact between 'hare' and 'kegare'.

(45) The local primary school and the media have begun to take over the responsibility to some extent in Ueno, however, partly because the average age of menstruation is becoming younger, with some girls beginning before the age of twelve, according to local informants.

although its occurrence is also a sign of the girl's incipient childbearing ability and hence marriageability[46] (Lock 1980: 90). Therefore it is celebrated as a family event by the eating of a special celebratory meal involving festive red bean rice, some of which is sent to relatives, such as the girl's grandparents (if not present at the meal), or to uncles or aunts.

Lock (ibid.) reports that some women in urban areas still feel that they are "dirty" when menstruating and often wash underwear worn at these times separately from other clothing worn below the waist. Some also feel the need to isolate themselves at this time, and by law all working women may take up to two days off per month (seiri kyūka) for their menstruation, or schoolgirls can be excused from physical exercise and only watch, but adult women in Ueno do not normally take advantage of these statutory rights (owing to the widespread use of sanitary towels etc.) unless they have particularly painful periods. Sexual intercourse is often avoided at this time, but on the grounds of hygiene, discomfort or not wanting blood stains on the sheets rather than out of any feelings of 'pollution' in the traditional ritual sense.

The consummation of marriage, if to a virgin, also involves some shedding of blood in theory and sometimes used to take place in a nuptial hut set apart from the community (Bownas 1963: 71). However, in modern urban Japan no ostensible traces of these kinds of purity and pollution attitudes are evident in the marriage rituals, except to the extent that most of them are Shinto ones and involve Shinto purification rites (cf. Hendry 1981: 179-180). In practice, despite nuptial huts, many women were not virgins at marriage in villages of the Tokugawa period (also in some rural areas until recently) because of the practice by which

(46) Nevertheless, the age of marriage was considerably later than the age of puberty even in the Edo period (Hanley and Yamamura 1977: 247).

young men could discreetly visit young women at night during courtship and before marriage (Goode 1963: 329; Hendry 1981: 24, 121-2), the marriage often only being made 'official' once a child was conceived (Henley and Yamamura 1977: 246). Later, from the Meiji period onwards, the elite customs of miai ('arranged marriage') spread throughout society in a process of 'samurisation' (Befu 1971: 50; Goode 1963: 329-331). In Ueno City there are now many women in their later thirties and older who were virgins at marriage, but this does not appear to be quite so common among those in their twenties or early thirties(47).

Namihira (1976: 354) has shown how the styles of bridal dresses in traditional village weddings and the form of headgear were often the reverse of those at funerals, the symbolism depending on reversals of white and black or of left and right (sleeves, etc.), symbolism which demarcated the spheres of hare and kegare. However, for residents of urban areas like Ueno such symbolism is unknown, unnoticed and, it seems, largely irrelevant to their lives, as Namihira herself admits in her conclusion (ibid. p. 367). Similarly, the fact that a Butsumetsu ('Buddha's death') day in the cycle of lucky and unlucky days(48) is avoided, if

---

(47) Sofue (1983: 19-20) notes how the number of young unmarried couples living together 'suddenly increased' in large cities since the 1969 students' revolts, when students of both sexes barricaded themselves into university buildings for a few months. Though there are no cases in Aoyama or Sakurano of young people living together (dōsei), in at least two households the wife was pregnant at the time of her marriage.

Among students up to and including high school age the two sexes tend to form separate social groups with relatively little formal interaction between the groups, but in fact a certain number of high school students do have boyfriends or girlfriends, often without their parents' knowledge. This secrecy about such matters often continues among university students, girls in particular tending not to tell their parents about their having a boyfirend whom they often meet. Owing to the lack of privacy in many houses, however, sexual relations tend to take place in isolated public places, in motor vehicles, forested hillsides or parks at night.

(48) Hendry (1981: 241) refers to this as the 'Buddhist six-day week', but in fact the order of auspicious and inauspicious days is not always a regular fixed succession but is subject to other influences which create occasional irregularities in the order of days.

possible, for weddings and other auspicious occasions is not connected in the minds of most people with death or pollution, (even if they recognize the meaning in the character) but is seen as simply an inauspicious day. Among the six days in this cycle, most informants know the meaning of only three:

Butsumetsu (Buddha's annihilation): an inauspicious or 'unlucky' day.

Taian or Daian (Great Safety): an auspicious or lucky day for anything.

Tomobiki (Pulling a friend): a day to be avoided for wakes or funerals.

Even these, however, only become operative at infrequent points in the life cycle, particularly when one has responsibility for the arranging of a marriage or funeral. These days serve as markers denoting the 'proper time' for such events (or else for avoiding such events) and help to classify the days as 'distinguishing markers' in the passage of time. Therefore, though 37.6% of the sample said they 'pay attention' to these dates, they only do so on rare occasions; for most of these it is deciding the date of their marriage. Even though many try to arrange their marriages for a taian, it is not uncommon for a public holiday or a weekend to be chosen as the wedding date, when the relatives or friends are more likely to be available and able to attend. By consultation with the place where the wedding is to be held, specialist advice on suitable times according to the six-day cycle may be sought and a convenient time which is not too inauspicious may be chosen. This may be a sengachi ('early victory') day, when the morning is said to be lucky and the afternoon unlucky[49], or a sakimake ('haste loses'), regarded as

(49) Hendry (1981: 241) defines sengachi as a day 'when a venture started early is likely to succeed'.

being unlucky in the morning but neutral in the afternoon[50]. Only one couple (Sakurano apartment dwellers) among all those interviewed could specify the meanings of sengachi and sakimake, but they did not know the meaning of shakkō ('red mouth'). Only one informant, a woman aged thirty of rural background could state the meaning of this, as a day when 'midday is lucky'[51], and she occasionally looked on the calendar to see on which of these days an examination or other important event in her life would take place; though she could do nothing to change the date in most cases, an auspicious day gave her 'relief of heart' (anshin) or a 'sense of security' (anshinkan)[52]. Such behaviour was reported by only one other informant, a woman of sixty also of rural background, who said she had "heard" one should not go out on a journey on a Butsumetsu, but she herself rarely leaves Aoyama[53] and therefore her adherence to this saying could not be tested in practice.

The tomobiki day becomes operative at the other major rite of passage, namely death. Its name means 'pulling a friend', and is taken to indicate that if a deceased person's friends were to attend his wake or funeral on a tomobiki day they too would be pulled into death together

---

(50) Hendry (1981: 241) gives a more detailed description of this as 'when important ventures should be left until late'.

(51) Hendry's more accurate definition is 'a dangerous day when high noon is the only safe time'. This informant, Miss Takeuchi, is the only one who mentioned paying attention to inauspicious days known as sanrinbo "when unlucky things happen in threes on the same day", which are not part of the Buddhist six-day week.

(52) See chapter 6 for a fuller discussion of these concepts.

(53) She buys most of her fresh produce from the mobile vendor and other shopping is often done by her daughter-in-law who lives in the same house. Owing to the cramped conditions at home and the presence of a young baby she preferred to be interviewed at the anthropologist's home, and said that was the first time she had ever been to that side of Aoyama-chō.

with him[54]. None of those questioned about their attitudes to tomobikis, taians or other days expressed any personal 'belief', whether 'active' or 'passive', in the 'truth' of this idea but tended to simply see tomobikis as days which should be avoided for funerals "in case any of the friends invited believed in it". Socially, it is "safer" to avoid a tomobiki day for funerals even if none of the participants express any 'belief' in the taboo; because their private scepticism is unknown the taboo continues to have social force, even to the extent of some families preserving the corpse in dry ice for an extra day or two in order to avoid a tomobiki[55].

'Black Pollution': Death and funerary rites.

Funerals and mortuary rites have been discussed already in connection with the ancestral cult, so here it will suffice to mention only a few of the polluting aspects of such rites, which are as follows:

i) A period of mourning during which the household is polluted ritually to the extent that a white curtain or sheet is often draped over a Kamidana in the house in order to keep the gods from becoming polluted too. This is normally practised while the corpse is in the house and until the funeral is over, but in some households can be observed until the 49th day rites which are also called the 'lifting of pollution' (ki-age).

(54) This idea may be to some extent related to, or is at least analogous to, the ideas found in western Japan that pollution from death can easily extend to people of the same age. It was thought in many rural areas of these prefectures that when a person died others of the community of the same age were likely to be "drawn" to death by their age-mate, the most common method of averting this being physical avoidance of the funeral rites for persons of the same age. Often these avoidance practices extended to all those in the same age association, thereby applying to people of a wide range of ages (Norbeck 1955: 114).

(55) Though all informants agreed that tomobikis are to be avoided for funerals, the relationship between taians and weddings is less clearly defined. Some say weddings should always be on a taian but others are content for them to be on other days, perhaps avoiding a Butsumetsu. Even in these cases, however, a similar attitude is often expressed, that "for the sake of what others think" it is better to have the wedding on a taian if possible.

ii) During this same period the family should abstain from other contacts with Shinto institutions, and if possible weddings or miyamairi rites in the family should be postponed. Sometimes this is not possible, as in the case of one Aoyama man whose grandfather died less than a week before the young man's wedding, after all the invitations had been sent out, so the wedding took place but the widowed grandmother remained at home without attending the wedding.

iii) A few weeks before New Year a family in which there has been a death in the previous year send out black-bordered cards explaining their circumstances and regretting that they are unable to send out the usual New Year cards (nengajō) for the coming year. These "apology cards" are sent to all those (relatives, friends or business acquaintances[56]) who would have received a New Year card under normal circumstances.

iv) At New Year these same families in theory desist from performing shrine visits, although in practice some do, as in the example cited earlier in this chapter.

v) Participation in festivals (matsuri) in an official function is also prohibited for those who are ritually polluted by the death of a relative in the previous 49 days (Eisei Kurimoto, personal communication) but no instances of this were reported in Aoyama or Sakurano owing to the absence of a local matsuri in the area.

(vi) A friend who has attended a funeral is given a sachet of salt to throw over himself on his return home in order to remove the pollution before he carries it into his own home; this is the extent to which non-kin are affected by the 'black pollution' of death, in contrast to the more stringent taboos imposed on kinsfolk. To a large extent all these practices are seen as 'customs' and are practised more for the sake of not offending other people than out of any 'active' belief in the pollution concepts - similar kinds of attitudes to those expressed regarding the observance of taboos related to the Buddhist six-day week. Even so, the respect for others' opinions still creates a widespread conformity to 'custom' despite the low incidence of professed 'belief' in the implied concepts.

---

(56) The pattern of card senders and recipients is not unlike that of Christmas cards in Britain except that in Japan probably more cards are sent to people such as former teachers or seniors in one's company.

Divisions and Compartments: The Bamboo tree

Purity and pollution concepts lay great stress on distinctions between categories and the fixing of boundaries (cf. Douglas 1966), concepts which are expressed 'emically' in Japanese by reference to the bamboo tree. Often terms such as kejime ('distinction'), kugiri ('a stage'), orime ('a fold'), fushi and fushime (node and internode of bamboo) are used by informants to refer to ceremonial aspects of the life-cycle as diverse as the 7-5-3 rites, yakudoshis and New Year rites. It was argued in chapter 4 that this concept ties together the cycles of yakudoshis and nenkis into a continuous and structurally parallel life-and-death cycle of rites. It could now be suggested that the 'life-cycle' is initiated by the 'red pollution' of birth and the 'death-cycle' by the 'black pollution' of death, so that the rites associated with these are to some extent aimed at overcoming the dangers involved in these polluting events. These remain the events most hedged around with ritual sanctions in modern urban life, whereas any former traces of purity and pollution concepts in relation to menstruation, marriage and yakudoshi (regarding the receipt of food from a person in his yakudoshi - cf. Norbeck 1955: 114) have either disappeared or become relegated to the category of 'lucky' and 'unlucky' days regarding which hardly anyone expresses an 'active' belief even while they continue to choose such days for ritual occasions in order not to offend others (or perhaps 'to be on the safe side' socially, if not spiritually). Purity and pollution taboos remain stronger at the major transition points into this world and out of it into the next, the 'life' and 'death' cycles dealing with the 'red' and 'black' pollutions respectively: however, these form a continuous life-death cycle in which the first half is the domain of Shinto and the structurally parallel letter half is the domain of Buddhism.

Conclusions

The themes of purity and pollution permeate many aspects of Japanese religious life but all of them focus on ideas that everything and everyone has a 'proper place', transgression outside of which comprises boundaries and provokes strong reactions about an action being inappropriate or something being "dirty". This is most clearly seen in material locations, the categorisations of 'clean' and 'dirty' items or places in the home, which creates a general 'Japanese stress on orderliness or tidiness in daily life' (Lebra 1976: 147). The social extensions of this psychology have not been discussed in any detail, but they are probably to be discerned in the fine categorisations of status hierarchies in business life (Clark 1979: 104-111), the more generalised hierarchies based on age differences in other social contexts (Nakane 1970: 28-31) and the even more generalised attitudes towards 'occupying the proper place' or 'taking one's proper station' described in the chapters with these headings by Lebra (1976) and Benedict (1946).

In a religious sphere the 'proper time' for some rituals are indicated by days such as taian or (negatively) by the avoidence of a Butsumetsu or tomobiki. Religious concerns with purity and pollution are most evident in Shinto rites but the general psychology behind those rites is indicated by the attitudes which see these rites as markers of 'stages' or 'distinctions' in a continuous passage of time. Most commonly the image of the bamboo nodes is invoked to convey this thinking, and the resultant conceptualisation could be interpreted as embracing both the Shinto 'life-cycle' and the Buddhist 'death-cycle' rites. However, as Douglas (1966) and Leach (1976: 33-6) have emphasised, these markers or boundaries are essentially ambiguous, neither on one side nor the other[57], and are

(57) Applied to Van Gennep's (1960) schema of rites of passage, the 'ambiguous' or 'liminal' boundary area is the 'middle' period of Van Gennep's three-fold schema.

therefore 'dangerous'. Purity and pollution beliefs and attitudes are therefore closely associated (as Douglas has made clear) with those relating to 'danger', whereas to remain within one's preconceived and well-defined boundaries is 'safe' by comparison. Therefore a fuller examination is required of the concepts of 'safety' and 'security' which lie at the 'centre' of social life whereas a transgression of the boundaries invokes taboos and rituals associated with purity and pollution. Such an analysis corresponds with the insights of Ohnuki-Tierney (1984) that what is "dirty" lies on the 'outer margin' of society (but not in 'nature'), but the concern in chapter 6 will be with the 'clean' and 'safe' areas of social life.

CHAPTER 6

SAFETY AND SECURITY

The search for security in life is a universal phenomenon expressed in a myriad of forms. Individuals differ in the extent to which they seek it in economic or religious forms, in the family or the political system, in social groups or in individualism. Nevertheless, certain consistent cultural patterns tend to shape the search for security into distinctive configurations indicative of cultural emphases. Such configurations are not necessarily qualitatively different from other cultures but may be quantitatively different, and expressed in a variety of spheres of life which may or may not overlap with those of other cultures. In what follows some expressions of this concern with security in Japan will be outlined in a number of their aspects, but particular attention will be paid to those areas where the Japanese configuration does not overlap with that of England or 'the West', or where it is quantitatively different. So, for example, little attention will be paid to the fact that all Japanese insure their cars (since this is a legal requirement in both Japan and the West) and more attention will be paid to differences which have been observed in an objective comparison between Japanese and English factory organisation (Dore 1973) or to the use of traffic safety charms which are quantitatively much more prevalent in Japan than are any similar phenomena in Britain[1]. More important still are the motivations which underlie such behaviour: insurance and traffic safety charms constitute complementary and mutually juxtaposed expressions of a deeper concern for safety and security which may manifest

---

(1) Although I have no objective statistics on the prevalence of St. Christopher medallions etc. in Britain, a subjective impression is that their incidence is far lower than the well over 60% figure for safety charms in Japan (especially since St. Christopher is now no longer officially recognised by the Catholic church.)

itself in less obvious forms as attitudes to phenomena as diverse as fortune-telling or marriage, social relationships in local neighbourhoods, or emphases in economic or industrial life.

Child rearing

Although Benedict's book (1946) on Japanese behaviour is now considerably outdated, and was based upon data collected from Japanese residents in America rather than first-hand fieldwork in Japan, a few of her comments on child rearing and social relationships do appear to be valid still today and to elucidate many facets of Japanese behaviour. When she writes that "dangerous" is one of the three most common (and constant) admonitions used towards young children, along with "bad" and "dirty" (Benedict 1946: 260), she could well be describing the vocabulary of a Japanese playground in 1984(2). An 18-month old toddler climbs onto a bench 2 feet high and is immediately snatched off it by a Japanese mother saying "abunai", "dangerous", while the boy's English mother is standing nearby watching the proceedings; she has already said "Be careful" but is more content than her Japanese neighbours to let her child learn by his own mistakes. Similarly, when her child examines an older child's bicycle (one with balancing trainer wheels attached at the back to give extra stability for a young child) she sees no particular danger involved, whereas a Japanese child examining his older sister's similar type of bicycle is taken away quickly by his mother saying "abunai", "dangerous".

---

(2) Another word used fairly frequently is "bachi", such as might be called out by a mother if a child runs round the corner of the flats out of sight. "Bachi" means a kind of supernatural punishment (see chapter 3) but it is commonly used as an empty threat to children or an admonition to behave as the mother desires. Ohnuki-Tierney (1984) views the word as synonymous with "dangerous".

Such culturally conditioned perceptions of 'danger' - which naturally vary to some extent among individuals - are not only verbally classified as "dangerous" (abunai) when an English mother might say "be careful"[3] but are also reinforced by the appropriate behaviour of physically removing the child. In other cases what is "dangerous" can become what is forbidden by etiquette (in this case synonymous with "bad" or "wrong", dame), such as when a child climbs up onto an electric kotatsu[4], 1½ feet high, and is told it is "dangerous" and removed. It is better to keep the child away from danger from the beginning, however, and for babies this is often done by the mother carrying the child around the home on her back (onbu suru), or, even if the child plays alone near his or her mother, he or she is usually carried when they venture outside the home. For older children (from one year old, but sometimes from about 6 months or younger) baby buggies are used by many mothers, but it is still not uncommon for children to be carried on their mothers' backs up to the age of two or three[5].

---

(3) To some extent abunai is a quicker and easier expression to use than the Japanese equivalent of "to be careful' (ki o tsukeru).

(4) A low table covered by a quilt over which is laid a working surface. The quilt reaches to the floor at each side, and an electric light attached to the lower surface of the table warms up the area under the table and the legs of those sitting around it.

(5) Those who continue to 'onbu' their children at this age might be influenced by the attitudes of the child's grandparents to some extent. This is certainly the case for Mrs. Suehara who lives with her husband's parents, but in this case it appears to the researcher and his wife that the 20 month old child, who often bursts into tears at the sight of a stranger or on hearing a loud voice, is insecure because of the strains and conflicts between his mother and his paternal grandmother, so he especially values the security generated by being always carried from place to place on his mother's back.

Such frequent close contact with the mother reinforces the child's sense of security, but it is merely a continuation of a cultural difference which is already apparent by the age of 3 or 4 months as shown by Caudill and Weinstein's (1969: 12-43) comparative study of maternal care and infant behaviour in the U.S.A. and Japan.

These differences between cultures become more exaggerated as the child grows older(6), and may be reinforced by other cultural patterns such as the tendency for many Japanese children to continue to sleep with their parents or another adult until at least the age of 10 and often up until puberty (Caudill and Plath 1974: 287-9), one result of which is to 'emphasize the interdependence more than the separateness of individuals' (p. 303). Another result, according to Dore (1958: 49), is that 'the individual gains a comforting security' and he comments that 'there is much to be said for the theory that this low evaluation of individual privacy is linked with the general preference for group, over individual, action and responsibility .....' (ibid)(7).

Since a closer bodily contact between infants and mothers has been established empirically by Caudill and Weinstein, and a greater tendency for families to co-sleep in Japan has been demonstrated by Caudill and Plath, these quantitative differences may be linked to the qualitative difference between Japan and the West which Doi (1973) characterises as a greater sense of <u>dependency</u> between Japanese people. This is a diffuse

---

(6) Caudill and Weinstein do not establish this conclusively in their study but predict that this will happen 'because of the strong external pressures for conformity and the strong internal pressures toward being accepted favourably by one's fellows, in any culture' (p.42).

(7) Tanaka (1984: 231-2) has recently related differences in Japanese versus American sleeping patterns to a greater emphasis in the West on the husband-wife relationship as compared with a Japanese emphasis on the parent-child (especially mother-child) relationship.

feeling or mood known as amae, the noun form of the verb amaeru, 'to depend and presume upon another's benevolence' (1974: 145). This state of amae originally refers to what a child feels towards his mother (ibid) but Doi argues that it is such a desire to amaeru (or at least the psychology of amae) which motivates and moulds the pattern of many social relationships in Japan (1973: 28-64). As such, according to Doi (1973:28), amae may be a psychological motivation towards the formation of social groups and the emphasis accorded to the group over the individual in many aspects of Japanese society (cf. Nakane 1970: 1-7), but, whether or not such a case can be clearly demonstrated, it is clear that the desire for amae is in essence a search for security. That security which the infant found at his or her mother's breast is obtained through amae, but essentially the same desire (for amae, and hence for security) is found (in a transformed behaviour appropriate to adult life) in many facets of Japanese social relationships, if Doi's psycho-analytical findings are to be believed(8). If so, amae is a Japanese manifestation of a more universal search for security which may take other forms in different cultures.

---

(8) It should also be pointed out that, though Doi emphasises the child's dependence on the mother, a Japanese mother is also dependent on her child to some extent. This is expressed by Tanaka as follows: '..... though it may sound paradoxical, the mother is dependent on the son..... It is only through bearing and raising him that she acquires an unchallengeable status in the household into which she married ..... Motherhood alone can legitimatize a woman, who otherwise can not be an autonomous person; motherhood bestows on her a respectable status both in the household and society at large, it furnishes her with a ..... life-work of caring for the child, it guarantees her support in old age ..... She can become a complete person only by becoming a mother' (1984: 233).

'Safety in numbers'

Doi's psycho-analysis of Japanese amae leads him to argue that the desire to amaeru is at the heart of behaviour which takes the form of dependency relations (1973: 118-9): such dependency upon another person arising from the desire to amaeru is manifested in social relationships such as those of senpai-kōhai or of teacher and pupil (especially in the more personalised traditional forms of training which still continue for arts and skills such as calligraphy, flower-arranging or the tea ceremony (cf. also Lebra 1976: 50-55). Even if the origins of such dependency relations in amae are doubted, the fact that dependency (or, the reverse side of the same coin, paternalism) exists in Japanese business organisation, for example, has been attested by several authors (e.g. Bennett and Ishino 1963; March and Mannari 1976: 193-202, 315-319; De Vos 1975: 218). It is found both in small, non-unionized family firms and in larger firms such as Nissei which provide many apparently 'paternalistic' benefits such as company housing, the factory clinic, welfare benefits and housing or educational loans but these are specified contractual benefits, the distribution of which are institutionalised as employee 'rights'. Dore (1973: 274-5) notes how 'the loyalty which is bought by these favours is an institutional, not a personal loyalty' and his comment that 'the personal paternalistic tradition ..... still exists in Hitachi only in the interstices of its organization - in the personal 'looking after' of the section chief who acts as his subordinate's marriage go-between' applies equally to Nissei. This is not strictly paternalism, and in theory the worker is not fully dependent upon the company's welfare benefits, but in practice the employees do become at least partially dependent on these benefits because housing, medical care etc. would cost much more on the open market and there is little incentive for younger families to go outside the firm for housing, for example, when

it is already provided for them. Bennett and Ishino (1963: 231) comment that 'paternalistic organizations ..... arise to meet needs for security not provided by other means' and that 'paternalism can have a psychological appeal quite apart from any "objective" security the workers may or may not possess' as manifested in amae. Elsewhere they note that amae influences the paternalistic, 'boss-follower' (oyabun-kobun) relationship in Japanese firms, but does not account fully for every aspect of it (pp. 101,118-9, 155).

However, even if the overall structures of large organisations like Nissei have lost some aspects of paternalism found in smaller firms or replaced these by contractual obligations, the social relationships of the 'interstices' are still important for day to day behaviour. The section chief who assumes some kind of responsibility for the welfare of those under him is in contact with his subordinates almost every working day, and sometimes at weekends too (on section outings or if the section manager also lives in the shataku), and the group is formed principally by reference to the leader rather than through any strong ties among the subordinates themselves (Nakane 1970: 40-45). Nakane pictures this kind of social organisation in terms of an inverted 'V' with strong vertical bonds but weak horizontal ones, which can build up into a pyramid structure based on personal loyalties to individual leaders who in turn have similar relationships with higher-up leaders:

Fig. 6.1

Nakane's model of Japanese organisation

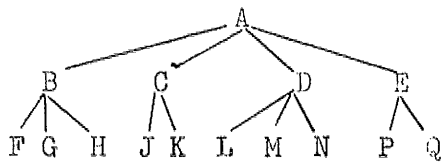

(See Nakane 1970: 42)

From personal loyalties to departmental manager A, the section chiefs B, C, D and E are brought into a 'group' or a relationship with each other but have very weak horizontal bonds. Their own juniors are each brought into a group organization in turn through their relationships with their section managers, although it is in fact more likely that stronger bonds will be formed among those working together in face-to-face contact each working day (for example, F, G and H in B's section) than among the section chiefs B, C, D and E., who may meet together once a week or less frequently for discussions and reports on the work of their sections(9).

Nakane's model of Japanese society seems to apply primarily to larger firms or government bureaucracies, but does not act as an explanatory model for those in small, often private, businesses or people such as housewives who are outside of the official 'frame' - to use Nakane's term - even if they are indirectly linked to a large firm's structure through their husbands (cf. Befu 1980). Writers such as Nakane (1970), Reischauer (1977: 127-137) or Vogel (1979: 146-157) have tended to over-emphasise 'ideology' of the group model - ideals such as 'harmony' and the imagery of the firm as a "big happy family" - but Befu (1980) points out that these ideals are often contradicted by the conflict, overt or covert, which can occur in practice(10).

Nevertheless, despite the ideology, a concern for the 'group', which tends to be accorded a greater emphasis than the individual members

---

(9) In open-plan offices where there is no physical divide between sections, section managers may have more frequent personal contact.

(10) This point is still valid notwithstanding the fact that overt conflict as manifested in strikes may be less prolonged than in many Western countries.

of the group (except perhaps for the leaders at the top), does appear to be widespread in Japan among those sections of society to which Nakane's model does apply, as evidenced by some of the examples which Nakane cites[11]. Even if the model only fits the larger, prestigious companies or governmental bureaucracies, the question then arises why an individual should identify himself or herself as an employee of Nissei, rather than as an engineer, section manager or whatever - in Nakane's terms, why personal identification is by 'frame' rather than 'attribute'. A related question is why there is so much competition in the educational system in order to enter not only a prestigious university, but also, after graduation, to find employment in one of the larger firms (or a government bureaucracy) which tend to fit Nakane's model (cf. Vogel 1963, ch. 3; Dore 1976: 46-49). What does the individual gain from belonging to the group?

Firstly, he or she may receive a relatively higher income than from smaller firms (Clark 1979: 44-5; Cole 1971: 37-40; Dore 1973: 28), especially when the extra fringe benefits are counted in. A larger firm also carries a certain prestige, but this would seem to be partially a result of the 'group psychology' itself, which identifies people 'according to the firm, rather than a strong motivation for wanting to join the group in the first place. It may also be doubted whether the differences in income[12] between smaller and larger firms truly justify the 'examination hell' competition to get into the prestigious universities which

---

(11) For example, when a man introduces himself to a stranger he is more likely to give precedence to the institution (eg. the Asahi newspaper or 'Nissei Industries') than to call himself a journalist or printer, engineer or office worker (Nakane 1970: 2-3). This identification is indicated too by the structure of name cards (meishi) which give first the company's name, then one's position in the firm, then the person's name.

(12) Cole (1971: 38-9) cites data showing that in 1964 wages in firms with 10 to 29 workers were 73% of wages in firms with over 1,000 workers.

help to pave the way for entrance into these firms, although the companies have their own examinations too. This pressure on children to 'succeed' educationally may begin in the kindergarten and intensify as the pupils move from middle to high school and then to university, the mothers often paying for private, extra tuition after school in order to help their children through the examinations (cf. Vogel 1963: 53) or for tuition at special 'cram schools' if they fail the first time (Dore 1976: 46, 49). Among those with school age children in Aoyama, the only mother who did not seem too concerned about her sons' educational achievements and did not try to put them into extra classes was Mrs. Kitamura, whose husband owns his own prosperous business which the boys could go into if need be. All the others with middle or high-school children in both Aoyama and Sakurano (where all are Nissei employees rather than having their own firms) were concerned about their childrens' educational success to some degree, and in Sakurano differences in the performance at school among neighbours' children could lead to jealousies and covert animosity. Extra tuition in at least one or two subjects is paid for by almost all housewives at some point in their childrens' careers, while those with a degree in subjects such as English or Mathematics often teach such classes for one or two hours per week. It seems unlikely that the future economic differentials between large and small firms provide a sufficient incentive for such pressure over most of the child's years of schooling. Neither is money the principal benefit mentioned by the mothers themselves when asked about their motivations and attitudes to their childrens' education.

A second benefit from belonging to a group of any sort, but especially one which is well-known, is that it provides a sense of identity. This question of identity is at the heart of both Nakane's emphasis on 'frame' and the symbolism or ideology of corporate life in Japan as manifested in

company songs, ceremonies and social activities, self-identification as a "Nissei man", and company ideologies, slogans and mottoes (cf. also Rohlen 1974, ch. 2). A motto or ideology such as "For Harmony and Strength" - the motto of the bank studied by Rohlen - is not an intrinsic part of the 'group model' but is an attribute of groups which serves to reinforce group identity. Whether the ideology serves this purpose or not is an open question, but from discussions with Nissei employees it seems that they certainly do feel a sense of 'identity' with the company which does not preclude their being critical of company policies in areas such as transfers, housing or promotion. This sense of identity is largely a product of their expectation of life-time employment with Nissei: as in a marriage, they are committed to each other in a long-term relationship in which the strengths and weaknesses of both parties are recognised to at least some extent, but the positive gains outweigh the negative aspects(13). Both are identified with and gain some identity from their relationship with the other.

However, a sense of identity is not the monopoly of big business but can be provided by other groups too - social, political or religious. In Japan social groups (at least for the men) tend to be those based on the company, however, and for their wives may be based on neighbourhood friendships or common leisure interests. Such clubs or societies provide social networks and may help tp relieve loneliness but they do not normally provide a sense of social 'identity' in the sense that no-one identifies him or herself as a 'golf player' in terms of primary identification (which is that of a business, at least on the <u>meishi</u>) even if a secondary identity is provided by such an identity. Politics are rarely

---

(13) If not, the relationship is likely to break down sooner or later; in marriage, this is separation or divorce, and in business it is dismissal or resignation from the firm.

discussed openly in Japanese middle-class circles and relatively few are involved more actively in politics beyond voting in an election; in an attitudinal survey it was found that only 4% considered it would be a good idea to form a group and try to realise their desires through its activities, whereas the majority preferred to elect a good Diet member or to depend on the political parties (Richardson 1974: 93-4). Therefore except for a few extremists (whether left-wing or right-wing) a political identification or allegiance rarely provides a sense of personal identity.

Religion does provide more sense of identity, however, although again it may be said to provide this for 'extremists' such as the Sōka Gakkai for whom a political identity is provided too. It may be that this sense of identity in a religious group (with all its social implications and networks included) is one of the benefits arising out of membership in the new religions among those who lack a sense of identity from membership of a large corporation. Several researchers (e.g. White 1970: 69-74; Ikado 1968: 106; Dale 1975: 52-3; Davis 1980: 161-4, 282-3; Norbeck 1970: 37-40) have noted how the 'new religions' tend to appeal primarily to the 'lower middle class' self-employed, or those in smaller firms, and to housewives even if later they begin to make some inroads among upper middle-class 'salarymen'. In this way, religious groups provide a sense of identity to those normally outside the 'frame' of the prestigious groups covered by Nakane's model, and as such a macro-level, holistic view of Japanese society would see a 'dual structure' in corporate identity between (male) employees in large corporations and those outside such groups, the latter having a higher propensity to join the new religions than the former[14].

---

(14) This religious 'dual structure' is therefore a reflection of an economic 'dual structure' in which large firms like Nissei stand in contrast to the small firms, many of which are family businesses.

Given these alternative possibilities for self-identity (plus the possibility of having none, an individualistic non-identity perhaps represented by those who spend many hours 'alone' in a crowd of people playing their individual pin-ball machines in a '<u>pachinko</u>' pin-ball parlour), identity as such does not provide a clear motive for the strenuous efforts to find employment in a large firm like Nissei. Moreover, employees can be critical of their firm and leave to join others, indicating a less than total identification with or commitment to their firms (March and Mannari 1976: 210 ff, 229-232, 238-240). Therefore it might be suggested that the third principal benefit from membership of a large firm is likely to be a stronger incentive, and it is this benefit which is most frequently expressed(15) by mothers wanting their children to succeed educationally and by those who have themselves become Nissei employees; this is the benefit of security.

In the 'dual structure' economy of Japan, consisting of some large firms like Nissei on the one hand and many small or medium-sized firms on the other, the latter very often become sub-contractors to one of the former in an almost monopsonistic relationship; this again is dependency for the smaller firms. In times of economic recession (or slower growth even) the larger firms may begin to cut down on their orders to sub-contractors, some of which may go bankrupt (Cole 1971: 37; Haak 1973: 157). Locally, this is expressed in the saying "If Nissei sneezes, Nishiyama catches a cold"; the effects of recession are felt much more

---

(15) No systematic statistics are available, but these attitudes were clearly expressed by all those questioned about their attitudes to education or about their choice of Nissei, though personal factors also enter in, such as its proximity to their natal home, the fact that they had studied in a university specialising in textiles or fibres or even the chances of finding a husband with a secure position.

severely by the smaller than the larger firms. As one of the Toyota workers quoted by Kamata (1982: 56) put it, "I like big companies ..... They never go bankrupt."

Within the major companies, the same differentials apply between the 'core' of 'permanent' employees and the 'periphery' of workers such as chauffers, cleaners and others on short-term, though often renewable, contracts (cf. Rohlen 1974: 17-24). The latter may be laid off at relatively short notice if the firm encounters economic difficulties, whereas the former are virtually guaranteed employment until the retirement age at 55 and may be dismissed only for serious misdemeanours such as theft, accepting bribes, sabotage or violence (cf. Dore 1973: 242, 186). As long as one remains loyal to the firm and performs one's work as expected, a secure employment plus many fringe benefits can be expected by the 'core' of Nissei employees, who on retirement with a pension also receive a substantial sum of money which may be sufficient to pay off any remaining mortgage or to begin a small private business. It is this aspect of security which is most valued by those seeking to become one of the 'salarymen' of Japan's 'new middle class' (cf. Vogel 1963) and which is envied by those in smaller firms (Cole 1971: 67). Concomitant with the security is an expectation of promotion at relatively regular intervals on a scale commensurate with the employee's education, age and length of service in the firm (see Abegglen 1973: 132-3; Cole 1971: 75-78; Clark 1979: 112-115; Rohlen 1974: 143-151; Dore 1973: 67-70, 224-227). This 'lifetime employment' system becomes an expectancy at a younger age in Japan than in the West, where a commitment to a fixed institution may crystallize later in life (cf. Cole 1971: 130; Clark 1979: 174-9, 221-4), but in addition to the earlier-formed expectations in Japan there is possibly a greater emphasis on security over wages. The institution emphasises long-term security over immediate rewards by the wage system in

which younger workers may be relatively underpaid and older workers relatively overpaid in relation to productivity (Cole 1971: 80-81, 86), a situation in which (owing to the difficulties facing workers over the age of 30 if they try to find alternative employment elsewhere offering a comparable income) incentives to remain with a particular firm are maximised (ibid., pp. 127-133,159). It is "safer" to conform to company policies than to take too many social or economic risks. Similarly, some company unions are very much concerned with their own long-term security when they make statements about the future growth and prosperity of the firm (ibid., pp. 244-250), because of the institution of 'company unions'. Such unions emphasise security over wages to the extent that the annual wage negotiations and perhaps a token strike for a few hours (the times of which are well publicised in advance) appear to be annual rituals in which the wage agreements have been largely determined in advance, but 'real' strikes or stoppages involving militant union action such as taking away vital company property, prolonged cessation of work or seizure of plant, - all occurring abruptly rather than as the final outcome of prolonged, unsuccessful negotiations - are only occasioned by what the union considers to be unjustified dismissals (Ben-Ari 1982: 3 - 8, 49; cf. Cole 1971: 117-122, 261-2). Such dismissals threaten the expectations of long-term security held by most unionized employees (who are usually part of the 'core' of 'permanent' workers) and the insecurity generated by such dismissals produces militant strike action.

Company unions therefore provide a security of employment which individuals acting separately are unable to achieve, but this security is not sought for a trade, skill or 'class' - the 'attributes' with the 'frame' of the company, in Nakane's terms - but rather for those already seeking long-term security in a particular firm's fortunes. They have struggled through the 'examination hell' to finally (by another entrance

examination) become members of a prestigious company like Nissei which can virtually guarantee an assured employment for life for its 'core' members. It can only do this on account if its size, however; smaller firms are more likely to be hit harder by any recessions. The appeal of the larger firms is not because "big is beautiful" but because "size is safe". The risks of dismissal in larger, impersonal firms are minimized by the presence of company unions - the majority of unionized employees being those who belong to larger or medium-sized firms in which union membership is restricted to the 'core' of permanent employees and is not open to temporary workers (Ben-Ari 1982: 31-3) - and as such company unions and the large firms to which Nakane's model most easily applies both illustrate a 'safety in numbers' principle. Security is generated through belonging to a powerful firm which is secure because of its size and risks of dismissal are minimized by the 'permanent' employees grouping together into unions. The 'group ethic' in these cases becomes a 'safety in numbers'.

'Safety First'

Ronald Dore (1973: 23-4) has noted how 'Safety First' slogans were much more liberally scattered throughout the Japanese than the British factories which he studied. Large notice boards consisting of a graph showing how many months have elapsed since a major accident at the factory were also conspicuous around the works. At the Nissei factory in Ueno there are not only such slogans and graphs but also a company motto which is as follows: 'Safety First; Quality Second; Production Third.' Before the 1972 oil crisis the last two items were in the reverse order, so that production was second and quality third, but always the motto has had 'Safety First'. In one department of the factory, this emphasis on safety is further reinforced by a group recitation of the following chant before commencing work each morning:

In praise of safety

"May today be happy all day through
Just as yesterday was too.
Happiness and safety go hand in hand.
So may safety always be over our orderly work
In the workplace to which we are devoted.
Safety. Safety. Safety. "
(16)

Other departments have slightly different slogans expressing similar ideas. In the 'general affairs' department(17) the following slogan is written up at several places along one wall of the large open-plan office; each morning all the employees face that wall and chant together in unison the safety slogan.

'Safety eulogy(18),

'Today also not forgetting to smile the whole day
Keeping the rules, there is no disaster'. (19)

---

(16) Anzen shō 安全 頌
Kino ga sō de atta yō ni
Kyō mo kōfuku na ichinichi de are,
Kōfuku wa anzen to tomo ni
Soshite anzen wa itsumo kokoro uchikomu
Shokuba no naka no kiritsutadashii sagyō no ue ni
Anzen, Anzen, Anzen.
昨日がそうであったように、今日も幸福な一日であれ。
幸福は安全とともに、そして、安全はいつも
心打ち込む職場の中の規律正しい作業の上に、安全、安全、安全。

(17) This includes the personnel section and other sections with responsibility for religious rites in the factory and for liaison with the city and prefectural governments on a range of matters such as pollution, taxation and welfare policies.

(18) This is the translation of 'shō' given by Nelson (1966: 956) but in the previous example has been paraphrased as 'in praise of safety'.

(19) 安全頌
今日モ一日笑顔を忘れず
規律守って無災害
Anzen shō
Kyō mo ichinichi egao o wasurezu
Kiritsu mamotte musaigai

The wording of these 'safety chants' differs from one department to another but all of them are recited each morning by the relevant department's employees, and all contain the emphasis on safety. Many also make reference to an association between safety and keeping the rules (kiritsu) - the kiritsu tadashii ("orderly", "well-disciplined" [work]) of the first poem cited being derived from kiritsu ('rules', 'order', 'discipline' or 'regulations'). Safety comes from an orderly and well-regulated life.

Kamata's impressions of such procedures during a 10-minute 'Safety First' meeting each morning are that the safety campaign has 'little more than a psychological effect' and describes the events as follows:

> 'The "meeting" consists of chanting in chorus the safety slogan that the team chief reads to us. He sits facing us on a bench in the first row and drones on, "First of all, we must and must not do .... " Then we repeat the slogan in unison. We feel embarrassed. Some ...., protest, "We aren't schoolboys." But somehow we all end up chanting the slogan in unison .....'
>
> (Kamata 1982: 59)

At Nissei, however, all face the text on the wall and chant it in unison, in a manner which has become so routinised that there are no longer any traces of the feelings reported by Kamata for the first time he did this. In fact, one Nissei kachō who repeated each morning the first 'safety eulogy' cited above was unable to remember the wording of it beyond the first line or so when asked about it on a later occasion, indicating that the morning ritual's impact upon his consciousness is relatively slight(20).

Nevertheless, at an ideological level there continues to be a heavy emphasis on 'safety', as indicated also by the 'safety graphs' at prominent locations around the factory which refer not to the absence of minor injuries but to the absence of accidents which have necessitated the halting of production in a particular section or department through one

of the men having to be taken to hospital. The effectiveness of such a policy is indicated by the fact that in 1983 the firm broke its record for time elapsed without a major accident, at the end of July reaching 7,500,000 man-hours without any cessation due to accident, an earlier record of 5,000,000 man-hours having been achieved on the 5th of April the same year. Dore (1973: 189) notes a similar effectiveness in Hitachi policies. At both factories there is a safety committee which at Nissei promotes safety at work through slogans, exhortations and talks to various departments on aspects of safety in their type of work. The Nissei committee organises special 'safety days' on the first and sixteenth of each month (or the nearest working days) when all employees wear arm-bands inscribed with 'Safety First' and the green cross which is the conventional symbol for such safety slogans in Japan generally(21). Departments using heavy machinery and which have had no accidents for 5 or 7 consecutive years are awarded a commemorative shield or cup which is kept in the departmental meeting room.

---

(20) Ben-Ari (1984: 35) refers to a policy since the Meiji period variously called 'production first' or 'growth first' (Vogel 1975: xv)'. However, Vogel himself does not use such terms in describing this policy and I have been unable to find indigenous Japanese uses of such slogans even if they are used by Western writers to describe Japanese policies. It is likely that 'safety' may take precedence over 'production' at the shop-floor level, despite ideological mottoes, as indicated by the protests when Toyota tried to put production before safety for an hour but seem to have been unable to maintain it even for that length of time (Kamata 1982: 58).

(21) Dore does not mention any similar practice at Hitachi, although he mentions Discipline Enforcement Campaigns lasting for a fortnight every 6 months, in which foremen wore yellow arm-bands with the slogan 'Discipline! ' and at morning assemblies of the workers encouraged greater punctuality, creativity, ingenuity and productivity (1973: 238-240).

Dore's (1973) comparison between two British and two Japanese factories shows objectively how Hitachi emphasised safety rather more than English Electric, and the similarities between Nissei and Hitachi noted above indicate that this safety consciousness is probably prevalent throughout most Japanese industries; certainly the green cross and 'Safety First' or similar[22] slogans are conspicuous on building sites, factory walls and construction machinery throughout Japan. Dore records that the Hitachi safety roster 'was a feature which had no counterpart in Britain: one man in each work group was made safety officer each week. He was required to do routine checks and record the results in a log book as well as give a verbal report to the foreman'(1973: 244). He cites the case of the chairman of the foundry's union committee who after an accident at work was made a safety officer and advanced to one of the 'specially titled' ranks in the firm's hierarchy, one of his jobs being the promotion of safety campaigns. Another contrast between Japan and England was the way in which 'Hitachi workers wore safety helmets issued by the company in every shop where there were cranes' (a feature which also appears to be standard throughout most Japanese enterprises) whereas English Electric workers 'were urged to buy protective boots and they were offered for sale at a cut rate, but ..... were not compulsory' (p.245). From these few references it does appear that there is a consistently greater emphasis on safety in the Japanese than in the English

---

(22) One firm in Hokkaido has a competition each year in which workers suggest a safety slogan for the year, although by the summer some of them in fact were unable to remember what that year's slogan was (Haraguchi Junya, personal communication). An example of such a slogan (displayed like 'Safety First' slogans with a green cross between the words) is '<u>Seiri</u> <u>Seiton</u>' (整理整頓), which might be translated as 'Arrangement brings Order'; this slogan is seen sometimes in other parts of Japan too. (Compare also the Safety rules mentioned by Kamata 1982: 10-11).

factories systematically compared by Dore, an emphasis which accords with the Nissei safety campaigns and suggests that safety is stressed much more widely in Japanese than in British companies.

However, even if 'safety' as an ideological principle is stressed to what appears to be a greater extent in Japan than in Britain, it may be another matter in practice. Nissei officials point to their good safety record but I was unable to ascertain about the incidence of minor hazards or accidents on the production line. If the Toyota plant described by Kamata (1982) is in any way representative of Japanese industry generally, then there are higher rates of accidents as production is speeded up (cf. chapter 4 of Kamata's book). Kamata quotes a foremen telling the workers to pay special attention to safety before walking out on a group of angry workers (1982: 47) - the 'ideology' of safety similar to that in Hitachi or Nissei - but later Kamata cites examples of actual accidents or dangerous situations. A few quotations can be cited:

'They operated the line on a fifty-second cycle. We were forced to crowd together while we worked at top speed. It was really dangerous, and the electric tools hanging overhead sometimes hit us on the head.
"They're putting production before safety," someone says.
"That's suicide ! "
"Not suicide," says one, laughing. "Murder." ' (p. 58)[23]

' ..... a trainee ..... got his finger caught in a machine the week before. In Kudo's workshop, a seasonal worker..... had a finger crushed, and in my workshop, too, a worker on the other shift lost a finger. The strange thing is that no news about these accidents is ever published. We learn about them only by word of mouth. Even when a worker dies, management simply announces that there has been a "serious accident". There's never a word of apology or condolence for fingers cut off, arms chopped off, or legs crushed'.

(p.107)

---

(23) However, Kamata continues 'probably because of the strong opposition, however, the line stops at 2:15', suggesting that this lasted for less than the intended hour, although on p. 23 Kamata had mentioned 2:15 as the time when the first shift finishes.

Some of the other accidents reported by Kamata include one in which the victim died and was therefore given a posthumous promotion (pp.96-7) and another in which a drill bit broke off and 'ripped into the neck of a worker' (p.97), which Kamata attributes to the age of the machine, most of those at that plant dating back to 1938. He also mentions safety arm bands (p.100) but in the context of a foreman and 'team chief' who are 'only concerned about how the accident affects their records' because it means their shop will be a 'Designated Safety Campaign Shop' for another 3 months. In another accident situation, involving a worker receiving a severe electric shock from a machine in which an electric cord was frayed, the foreman attributes the problem to the worker's biorhythm (p.121)(24); 'the key to safety is for all of us to be careful when our own biorhythms are bad'. Similarly, when the union put up a notice announcing the death of a worker in an industrial accident (worded 'we pray for the peaceful repose of ..... sincere condolences'), Kamata comments (p.97) that 'condolences are one thing, but not a word of protest against the company! Both the company and the union seem to blame the accident on the carelessness of the victim.'

Therefore, it is clear that at least at Toyota there is a clear element of danger in one's work, so the safety campaigns which Kamata often mentions (e.g. pp. 11, 34, 37) might be justified. But is Toyota, or Kamata's account, to be regarded as 'typical'? Ronald Dore's introduction to Kamata's book gives two caveats to the interpretation of Kamata's data. Firstly, he notes that Toyota seems to be more extreme in the extent to which it is so 'single mindedly devoted to success and the extent to which it suppresses individuality and privacy in a quasi-military organization'

---

(24) The concern with biorhythms which Kamata mentions in a number of contexts might be compared to the 'pseudo-scientific' explanations for yakudoshis as times when the body is susceptible to illness.

so that most other large firms (such as Nissei perhaps) 'have not managed, or tried, to beat their union into quite such submissive complaisancy as Toyota has' (Dore 1982: xiii - xiv)[25]. Secondly, Dore notes that Kamata was writing about the last year of the pre-oil-crisis growth period when the shortage of labour was at its height, so that a firm's competitive success depended more on 'getting the maximum production out of each hour of paid labor time', which accounted for the speed-up mentioned by one of Kamata's colleagues which transformed the production lines from the relatively casual and leisurely paces of 5 years previously (ibid., p.xvi). Therefore one should interpret Kamata's account with caution when trying to assess the relative degrees of objective danger in Japanese work situations as compared with European or American ones. International comparisons are difficult, but the figures cited by Dore in this regard are still worth quoting:

> 'if one takes simply deaths from industrial accidents as posing the fewest problems for international comparison, the 1973 figures (the latest I have to hand, but there is no reason to think it an exceptional year) show that in manufacturing Japan had the same three deaths per 100,000 workers as the United States - slightly lower than Britain's four. (In mining Japan was a shade higher than the other two countries; in construction, equal with Britain and higher than the United States; in the railroads, much lower than either.)'[26] (Dore 1982: xxii - xxiii).

Later Dore comments (p. x l) 'I am far from sure, though these things are difficult to measure, that the work pace in Kamata's shop was in fact greater than in Germany or the United States'.

If this is so, and if the international statistics mentioned by Dore are valid, then objectively there is little reason to suppose that Japanese factories are on balance 'more dangerous' than their British or American

---

(25) This correlates with the comment of one of Kamata's colleagues quoted on p. 156 who says, "Toyota is worse than the little companies. Who do they think we are?"

(26) According to an article in 'The Daily Yomiuri' for the 18th September 1983, Tokyo's subways are reported to be 'the best in the world for safety', including also a lack of vandalism.

counterparts. However, on a perceived, subjective level it is clear from Dore's (1973) comparison of Hitachi and English Electric that there is a quantitatively greater emphasis on safety in the Japanese firms. It may also be a qualitatively greater (or different) emphasis, as indicated by the religious rites for safety at Nissei to be described in chapter 12, but it is likely that this clearly greater subjectively perceived emphasis on 'safety' in Japanese firms like Hitachi or Nissei reflects a deeper difference (quantitative or qualitative) in cultural values regarding the importance of 'safety'. Such an emphasis or 'cultural value' seems to be a 'key theme' in Japanese culture and to indicate that a concern with 'safety' or 'security' is one of the underlying 'motivations' for Japanese behaviour. Such a pervasive concern is manifested also in many other facets of Japanese social life in which international comparisons of a quantitative nature may be more problematic but qualitative comparisons or contrasts still seem to correlate with the importance attached to 'safety' in industrial life. One of these is an emphasis on traffic safety which appears to be more marked in Japan than in Britain.

Traffic safety

The Aoyama and Sakurano jichikais, like all the other neighbourhood councils in Ueno, each contain a safety representative. Each month they meet with their counterparts from other jichikais in the same city to disseminate information and share views and ideas. Often the meetings take the form of a talk by a bureaucrat from the town hall, followed by some questions and discussion, but the Aoyama representative considers his position to be largely redundant because his is such a quiet neighbourhood. Sakurano contains the road from the Nissei factory to Aoyama, but this does not carry too much traffic and there is a wide open area (part of which is sometimes used as a baseball pitch) where

the children usually play in safety. The representatives of other jichikai in the city have rather more responsibility for traffic safety in the narrow lanes between houses, sometimes without public lighting at night, where children and the elderly may face more danger from traffic. In these areas there are usually traffic safety committees consisting of local volunteers (housewives) who stand by the roads with yellow flags each morning of the school terms and ensure the children cross the roads safely in the rush-hour traffic.(27)

Nationwide traffic safety campaigns are conducted every spring and autumn, at which time yellow roadside flags urging safe driving are usually in evidence beside major routes. Many major cities have a campaign in the summer too, coinciding with either the 'Citizens' Safety Day' on July 1st or the 'Tourism Day' on August 1st. The latter day marked the beginning of a two-week campaign in Kyoto in 1983, so many civil servants(28) were released from their regular employment in order to distribute packets of tissues, containing specially printed admonitions to drive carefully, outside the major department stores and other places passed by many people. Some were dressed up as Walt Disney characters while distributing the tissues; others wore yellow shoulder bands announcing the traffic safety campaign. The campaign was publicised in local buses and underground trams and the police set up a special table at the station for the public to consult them on any matters of concern - but few did so in practice, possibly because the table was behind a

---

(27) Traffic is not so heavy in the afternoons when the children return home, but many stay on for extra 'club' or sports activities so that their return is spread out over a period of 2 hours or more. The local volunteers do not monitor their return journey, but mothers of kindergarten children take turns to escort a group of their own neighbourhood's children to and from school each day.

(28) One of them gave the figure of 3,000 but this would seem to be rather more than were evident on the streets that day even if they were spread throughout the whole city.

partition at one end of a little-used waiting room. When asked, they were unable to supply statistics on the effectiveness of this or of previous campaigns.

In some cities such as Sapporo (but not in Ueno) the magazine issued each month by the town hall contains a different slogan about traffic safety each month in the lower left hand corner of the front cover. In July 1983 this said "Keeping of traffic regulations starts first with oneself"[29], under which every month was printed a smaller slogan saying "Safety Sapporo", adopting a transliteration of the English word 'safety'[30]. That same summer they distributed to each household a sticker (presumably for the car or for a prominent place in the house) giving guidelines for traffic safety such as looking both ways before one crosses the roads or not driving too fast.

The Ueno city government is content with less grandiose safety schemes. It participates in the national spring and autumn campaigns to the extent of putting up the yellow flags[31] and using a public announcement van to broadcast safety exhortations around the city, but there are no special safety admonitions in its monthly newspaper. Once it distributed a leaflet through the door to each household urging families to be careful about safety in the home. The leaflet suggested care in cooking - especially for fried foods such as 'tenpura'[32] - and careful use of kerosene stoves, turning them off if one left the house in case they were toppled over in an earthquake.

---

(29) 'Kōtsū hōki mamoru wa mazu watashi kara'
交通 法規 守る は まず 私 から

(30) This data was collected during June and July 1983 while staying in Sapporo.

(31) These consist of simple slogans such as 'Traffic Safety Movement' (Kōtsū Anzen Undō, 交通安全運動).

(32) Chopped up vegetables or fish deep fried in batter.

Using cartoons to illustrate dangerous household situations, it also warned against smoking in bed, leaving kitchen cloths hung up above cooking ranges, and many other common household hazards. An inspector also comes round periodically to households to check on such safety features.

Some local halls in Ueno display slogans or notices regarding safety, the Nishi-ama community centre having a notice 2½ feet high and 20 feet long next to its car-park proclaiming in large red characters 'Traffic safety comes from discussions in the home'(33). Underneath in smaller black characters the sponsor of the notice was announced - the 'Ueno city local council association concerned with traffic matters' - i.e. the monthly meeting of jichikai safety representatives. Local schools sometimes display similar notices outside their gates, one example being:

> 'Obeying the traffic rules,
> Cross over at the zebra crossing',
> (a notice put up under the
> auspices of the local police).

> 交通ルールに従って
> 「横断陸橋」歩道を渡りなさい。

The recorded announcement tapes on local buses sometimes warn passengers not to cross the road immediately in front of or behind the bus after they alight, and, in common with most bus companies throughout Japan, request passengers boarding the bus not to bring on board any dangerous articles or weapons(34).

---

(33) Kōtsu Anzen wa katei de no hanashiai kara
交通安全は家庭での話しあいから。

(34) This dates from the student riots against the ratification of the Mutual Security Treaty with the U.S.A. in the early 1960's, when rival gangs of students sometimes attacked each other with sharpened bamboo sticks if they boarded the same bus.

Local 'accident black spots' are well publicised, as are accident statistics in the municipal newspaper(35).

Many more examples of this concern with traffic safety could be cited, but these are sufficient to show that this emphasis is widespread at an ideological level, even if the effectiveness of these slogans might be questioned if owing to their ubiquity drivers cease to be conscious of these common admonitions(36). Certainly there is a great need for safe driving in Japan: most roads are narrow and may be bordered by steep ditches for rain and bath water, which in Koyama eventually feed the irrigation ditches of the rice fields in the valley. There may be metal plates or concrete slabs over the ditches at the entrances to houses or garages but mostly the ditches are uncovered and it is not uncommon for a car wheel to go off the road into the ditch, sometimes breaking the axle. In many suburban areas such as Sakurano and Aoyama there are no pavements for pedestrians, and young children often play outside on the streets. Where

---

(35) The prefectural magazine on local 'economy and society', produced by the local 'information centre for small and medium-sized firms' also carried a detailed article on accident statistics in the prefecture in its Autumn 1983 edition. Larger cities like Tokyo have electronic notice boards showing numbers killed or injured already in traffic accidents on any particular day.

(36) On the other hand, it may be that seeing these exhortations so often, especially as they are conveyed to the mind by a few common Chinese characters, the need for safe driving becomes 'programmed' into the subconscious mind of the drivers.
However, such admonitions seem to have had relatively less effect upon pedestrians and cyclists who have not had to undergo the rigorous driving tests. Cyclists are regarded as 'pedestrians' rather than 'road users' but where there are no specially designated cycle lanes cyclists ride either on the ordinary pavements or on the roads. When riding on the roads they cycle in either direction on either side of the road and not infrequently in the centre too. In the Nishiyama main shopping street it is not uncommon to see mothers on bicycles with small children sitting on seats attached to both the front and rear of the bicycle, sometimes with a third child on her back, and bags of shopping over the handlebars on each side.

there are blind corners the city council erects mirrors so that drivers can see around the bend, and sometimes notices saying 'beware of children dashing into the road' and 'drive slowly' are erected at such points too. Learner drivers are taught in special driving schools where they drive round practice roads and it is only after they have passed a provisional test that they are allowed on the public roads in the company of an instructor (and with the equivalent of an 'L' plate on the car) until they take the final examination. In all these ways traffic safety is urged upon drivers to a considerably greater extent than in most other countries[37]. To some extent this is a result of the objectively unsafe condition of Japanese roads (narrow, crowded and often very dimly lit at night) but it is also consistent with the emphasis on safety and security in many other facets of Japanese life.

Social Relationships

In social relationships the rules of etiquette help to provide a sense of security by ensuring that each person knows what is expected of him or her, and can serve to mask any tensions or strains in the relationships. By 'etiquette' is meant the minutiae of rules and regulations which govern inter-personal relationships, forms of speech, dress, depth of bowing, giving of appropriate gifts at the correct times and suitably wrapped up, how and where one sits in a room, acceptable topics of conversation and many other kinds of behaviour. In all these areas, it is external appearance which counts - the tatemae - regardless of one's own inner feelings or even the truth content of one's polite and formal comments. One's inner thoughts, motivations, feelings and emotions - the

---

(37) It appears that the annual test equivalent to the British M.O.T. is also more rigorous in Japan, with slightly worn parts needing to be replaced which would probably pass the M.O.T. in Britain.

honne - are to be kept inside; they are not for public display. Sometimes they may be displayed in the domestic setting, where a man might quarrel with his wife, or mother or sister, but even then there may be a fear of the neighbours overhearing: when Mrs. Suehara quarrels with her mother-in-law the latter often tells her to lower her voice so that the neighbours do not overhear their argument(38). More often, however, inner feelings are simply repressed and are rarely, if ever, expressed.

The priority of outside over inside (soto over uchi) or of tatemae over honne in human relationships is indicated by the importance given to social obligations (giri), repayment of social debt (on) and personal honour, what Benedict (1946: 116) calls 'giri-to-one's-name'. The traditional uses of these concepts and spheres of applicability have been detailed by Benedict, but they still constitute an ideal upheld today in television samurai dramas, (jidaigeki, cf. Moeran n.d.) and in Ueno city (presumably elsewhere too) continue to exert a profound influence on people's lives(39). The comment by one informant that in theory she would prefer to express her own opinion but in practice "I am often defeated by giri" indicates the power of such social norms. The degree

---

(38) Information from Mrs. Suehara herself. Note that Japanese houses are often very close together (separated by sometimes only 6 to 10 feet) and usually constructed of wood or of other materials on a wooden frame.

(39) In the questionnaire informants were asked what they consider to be more important, their own opinions or giri-ninjō (an expression which carries the connotations of living up to socially expected norms - cf. Doi: 1973: 33-5): 51% replied giri-ninjō, 44% their own opinions but 5% wrote in on the questionnaire "both", some indicating relative percentages. Probably many more would have chosen this option if it had been available initially, suggesting that classification of people into types by such questions is probably meaningless.

to which people conform to these norms or rebel against them seems to depend on situational ethics and the costs involved in offending any particular person: on the whole, superiors may have more freedom of expression in some areas but they are also bound by obligations to their subordinates and to the group as a whole (e.g. the firm) or their own superiors. Moeran (n.d.) has shown that these concepts of socially approved conduct and terms such as giri are originally Confucian ethics, but the fact that people still pay lip service to these principles, or even observe them in practice, no more makes them Confucianists than obeying some of the principles of the 10 Commandments (or paying lip service to them) makes someone a Jew or Christian(40).

Essentially giri, on and so on involve not universal ethical standards but situational ethics directed towards avoiding causing offence to others and avoiding personal shame or dishonour. To the extent that all these are involved in external relationships and others' perceptions of oneself rather than inner moral standards, they indicate the priority of tatemae over honne, the outer form over the inner reality. Avoidance of shame in public does not avoid private guilt feelings, however, which remain hidden deep inside and rarely surface, one reason for this being that there is no 'place' for expressing than in public. Security in social relationships comes from conforming to public opinion rather than to any inner convictions of moral absolutes about what is right and wrong.

---

(40) In the questionnaire respondents were asked if they had a religion for themselves, rather than a religion from family tradition, and were given the options of Buddhism, Shinto, Christianity or 'another religion'. Although Confucianism was not included as an option, no-one identified himself or herself as a Confucianist under the label of 'another religion'.

Benedict describes the security which came from 'taking one's proper station' in life in the (theoretically) rigidly controlled Tokugawa regime[41] which governed by law not only many aspects of diet, clothing and personal possessions considered appropriate to each social class but also standards of behaviour fitting for each group: 'One trusted the ['existing map of conduct'] and was safe only when one followed it ..... Within its stated limits, it was a known and, in their eyes, a dependable world. Its rules were not abstract ethical principles ..... but tiny specifications of what was due in this situation and what was due in that situation ..... It guaranteed security so long as one followed the rules' (1946: 71, 73). Discussing a later period in their history (from the Meiji Reform to the Second World War) she writes about hierarchy in Japan that 'neither the higher nor the lower may without penalty overstep their prerogatives. As long as 'proper station' is maintained the Japanese ..... feel safe. They are of course not 'safe' in the sense that their best good is protected but they are safe because they have accepted hierarchy as legitimate' (1946: 95-96).[42] These quotations are cited at some length because they indicate that safety and security have been principal motivations behind Japanese social relationships for many centuries and continue to play a similar role today through seeking security in the fulfillment of social obligations or expectations.

Benedict (1946: 273) and Lebra (1976: 152) among others, have pointed out the use of ridicule to induce social conformity; children are threatened with being laughed at if they do not conform to rules of etiquette[43].

---

(41) These regulations were not always followed in practice, as Hanley and Yamamura (1977) have shown for aspects such as population mobility, styles of dress and other regulated aspects of life.

(42) She goes on to describe the events leading to the Second World War as an attempt 'to export [their] formula for 'safety' (p. 96).

(43) There are other methods of discipline used too, as enumerated by Lebra (1976: 150-153).

Embarrassment and shame are invoked as sanctions against social non-conformity and lack of fulfillment of social obligations. Personal honour and that of one's family are at a premium: children are often disciplined by the comment, "Neighbours are watching whatever you do" - i.e. in a judgemental fashion (Kasahara 1974: 402; Benedict 1946: 221-2). Shame (haji) is 'based on the judgement of others .... Standards of morality are outside oneself and, although they do not entirely take away the conscience of guilt and sin, they tend to warp it and drown it in the exterior criteria accepted by the community' (Spae 1971: 74). 'Ethical' behaviour becomes socially acceptable behaviour, but the roots of this lie in a desire to preserve individual security by avoiding shame, ridicule or embarrassment. Security comes from conformity to the social rules and not taking social risks - just as safety in the factory comes from observing regulations and a secure employment is normally assured by keeping the company rules.

Historically, the social rules have changed to some extent but security continues to come from observance of the rules as they stand. In business and employment relationships, juniors are not supposed to openly express an opinion at variance with that of their superiors in the superior's presence. If they do, it is only in a very circuitous manner, and thereby they seek to preserve their own position or security. For example, those aiming for promotion in a business hierarchy are more likely to refrain from expressing dissident opinions and to minimise conflict with superiors than those with less to lose by open conflict (cf. Cole 1971: 109, 137-8, 157-161). In such relationships a person's security for the future is put at a premium.

The situational nature of such relationships is illustrated by the 32 year old research assistant in a laboratory who regularly visited the anthropologist's home and was usually relaxed and often cracked jokes.

Once when he came on a visit with his boss, he remained quiet and soberly restrained throughout the evening and let the older man (aged 52) do most of the talking. The etiquette of deference to an older person takes priority over personal expressions of friendship because it is 'safer' to conform to the rules as they stand.

In the Nissei shataku the fact that all work for the same company puts a premium on the maintainance of good neighbourly relationships among the wives. Failure to do so may result in a reputation damaging to their husband's chances of promotion in the firm. In shataku elsewhere (belonging to other firms) there have been cases of husbands being transferred to a company branch in a less favourable location with more limited opportunities for promotion because of disruptions in neighbourhood relationships caused by the wives (see Kinoshita 1983)(44). Although no cases of this at Nissei were known or admitted to by Sakurano informants, they nevertheless felt under continuous pressure to maintain at least an appearance of friendly relationships simply because of their husband's employment in the same firm and the need to avoid conflict if peaceful relationships are to be preserved among those one has to live close to for probably at least several years to come. In such situations it is 'safer' to maintain appearances of friendliness and avoid open conflict by keeping conversations superficial and not touching on topics of potential disagreement, jealousy or rivalry.

---

(44) The authors of this book also mention the existence of 'spies' in some shataku who report to the personnel office about the behaviour of other wives, but no knowledge of such people was expressed by Nissei informants.

Superficiality is safe; sincerity is suspect[45].

---

(45) Nevertheless, 'sincerity' (makoto) is a virtue which has a variety of meanings, both positive and negative, which do not correspond to the range of meanings of the English word 'sincerity'. Sincerity (1) 'makes things real'. It has 'a mystical quality' but is 'not ..... a separate virtue but the enthusiasm of the zealot for his creed' (Spae 1971: 107 and Benedict 1946: 219); (2) the Confucian ideal, merged with Shinto, may have once acted as a personal conscience but, after influences from Taoism and Buddhism, became 'submerged in a vague, cosmic, moral consciousness to which (the Japanese person) was bidden to conform from an inner, but never clearly definable, motivation. Makoto became exasperatingly ambiguous' (Spae 1971: 108); (3) originally a synonym for 'honest' (shōjiki), but the latter replaced makoto in popular usage since the 17th century as a practical word for honesty in business and economic life (ibid. pp. 109-111); (4) an appeal to earnestness of sentiment when words fail to express one's real meaning. This can give foreigners the impression that calling a man "sincere" has 'no reference to whether he is acting "genuinely" according to the love or hate determination or amazement which is uppermost in his soul' and "insincerity" becomes tantamount to saying that the other person does not agree with one's own views (Benedict 1946: 215-6). Spae also gives a few other nuances or relevant comments on aspects of makoto (pp.112-3), but, whatever the values and ideals attached to makoto, in practice both speech and action, even if "sincere" may be misunderstood as "insincere" or can involve too many complicated social entanglements, so silence or sitting on the sidelines is 'safer' even than 'sincerity'.

Safety in Speech

"Behold the frog who when he opens his mouth displays his whole inside" is a Japanese proverb denoting the idea that it is somehow uncouth to expose all one's inmost thoughts and feelings, especially in matters of private opinion (Benedict 1946: 216), giving rise to a reluctance to expose one's inner honne. These ideas involving restraint in speech (partly out of a desire "not to offend"(46)) are not limited to the speech act itself, however, but are also expressed in the linguistic forms themselves:

> 'There is a certain stylistic vagueness very pleasing to the Japanese reader. It is never too clear who does what; thereis plenty of scope for the imagination and for inventive interpretation; there is charm, poetry and detachment. With such a style, obviousness becomes crudeness and precision becomes rudeness'.
>
> (Spae 1971: 199)

One of the inner motivations in this aspect of Japanese society is the same as that for reserve in social relationships - the security which comes from not being too outspoken. In more concrete terms, language tends to draw more attention to situations or objects than to human subjects through a relatively infrequent use of personal pronouns; nevertheless, 'the slightest friendliness or the most guarded ridicule is readily felt, and ..... is taken more seriously than it deserves' (ibid. p. 73). Therefore it is 'safer' to avoid potential conflict through the forms of speech use, including the use of honorific language, than to display one's whole inside like a frog(47). The result is a cultural value system which 'esteems vague expressions and avoids frank talk' (Kasahara 1974: 403).

---

(46) The use of honorific speech serves the same purpose too, even if it is not strictly required by a situation - as illustrated by a teenager who at first did not use it but then later began to use it to the authropologist and his wife, the reason for the switch being "because my mother told me not to be rude".

(47) Such expressions or proverbs as these need to be understood in their context and in terms of their intention: it is equally true that in other contextsthe frog is said to 'sing' and their 'singing' (croaking) can be perceived as melodious. A proverb which is often used in terms of social relationships and not standing out or being conspicuous in one's conduct says 'a nail when it sticks out is banged back down again'; in some versions the idea is likened to a pole-driver which pounds all the

'Forewarned is Forearmed'

Benedict makes some interesting comments about the Japanese attitude to security during the Second World War:

'They talked constantly about security ..... being only a matter of being forewarned. No matter what the catastrophe ..... the Japanese line to their people was that this was foreknown and that there was nothing to worry about ..... obviously counting on the reassurance it gave to the Japanese people to be told that they were living in a thoroughly known world.'

(1946: 26-7)

After enumerating various examples, she continues,

'Only granted all was foreknown, all was fully planned, could the Japanese go on to make the claim so necessary to them that everything had been actively willed by themselves alone; nobody had put anything over on them' (p. 27).

Security comes from predictability. Social relationships and the rules of etiquette set out a series of detailed rules of conduct which allow a certain predictability in social intercourse, and 'each move has its consequences and one should not act without estimating them' (ibid, pp. 221-2).

On a physical level also, unexpected disasters such as earthquakes and typhoons create insecurity, and so the directions of typhoons are carefully monitored and publicised in the same way as seismologists warn of possible earthquakes. Not much can be done about these physical dangers, however, except to take out an insurance policy (especially common among those in areas often hit by earthquakes(48), but the same attitude of predictability also applies to the blooming of the cherry blossoms(49),

(47) metal girders so they stick out of the ground at the same height. This proverb suggests that social pressures act towards conformity, and one will have to conform whether one likes to or not.

(48) Personal communication from Mr. Murase, a resident of Aoyama.

(49) This is partly because of the custom of families or groups of business colleagues having picnics under the cherry blossoms - those for business associates often taking place in the evenings in the form of drinking parties. Daily reports on the progress of the 'cherry blossom front' as it moves from south to north are given in the press, radio and television.

the coming of the rainy season in June, the attention paid by many Japanese to long-range weather forecasts, and the fondness for presenting in the media statistics relating to a wide variety of issues, from economic growth rates(or future predictions of it) to numbers killed in traffic accidents.

It would be over-simplistic to suggest that the incidence of natural disasters from typhoons or earthquakes is the origin of the Japanese concern for safety, though it may be a contributing factor, but in practical terms house insurance is prompted not only by fears of such disasters (in some regions more than others) but also by practical considerations such as it being a condition for their obtaining a mortgage. Though security is also derived from house insurance, and from legal requirements for car insurance, international statistical comparisons may be misleading because of the variety of local factors involved.

In a country where savings are important in order to buy a house, educate one's children or provide for one's old age (especially in the absence of highly-developed social security institutions), predictability of return and security of funds become highly significant issues for most people. Since investment in the stock market may appear to be hazardous for those whose future security is at stake if the shares were to fall unexpectedly in value, the 'safer' returns offered by banks or life insurance companies tend to be preferred, the Japanese propensity to save being one of the highest in the world (Blumenthal 1970: 5-8; Komiya 1966: 158-9). Savings held by banks or post offices are often in the form of fixed-interest time deposits, but even ordinary savings accounts are subject to relatively low fluctuations in interest rates as compared with other capitalist economies (Suzuki 1980: 37-40). However, the short-term money market 'call rate' and other inter-bank rates do fluctuate considerably according to market conditions, a fluctuation

often regarded as "preposterous" in Japan, whereas in fact, as a result of the generally prevailing 'artificially low inter-rate policy and the "abnormal" rigidity exhibited by the various interest rates, the "normal" degree of flexibility exhibited by the call rate has ended up by being referred to as "wild" or "crazy" instead of being called "normal"' (Suzuki 1980: 43-44). In other words, predictability and stability are desired as much as possible, and generally are provided for the general public at the expense of financial institutions which have to adjust fluctuations in the demand and supply of money among themselves at less predictable rates. Hence the maximization of predictability is one distinctive feature of Japanese financial institutions and patterns of personal savings.

Decision-making

No matter how predictable some aspects of life may become, uncertainties about the future and difficulties in predicting the outcomes of decisions remain. Even if decisions are made on as 'rational' a basis as possible, ultimately they are still based to some extent on a subjective evaluation of statistical probabilities or the desirability of various possible outcomes, and there is always the possibility of unexpected (even if unlikely) occurrences. In those decisions involving corporate life or affecting other people in addition to the one carrying the responsibility for a decision, the insecurity arising from the possibility of a 'wrong' decision is intensified.

The 'typical' Japanese solution to this dilemma is that of group consensus. This process has been described in detail elsewhere (e.g. Noda 1975: 121-2; Craig 1975: 22-24; Gibney 1975: 194-6; Rohlen 1974: 97-8, 107-8) so here it is sufficient to note that it is usually through a long discussion in which each person only gradually unfolds his or her ideas, subordinates avoiding the expression of an opinion overtly at variance w ith that of a superior. Gradually a so-called 'group consensus' is considered to emerge - although this

may be blocked in practice by those given the task of executing the decision, or else the decision may be couched in ambiguous terms or postponed indefinitely (Woronoff 1982: 45-49). Despite such potential shortcomings, group decision processes are common in governmental and business organisations (Vogel 1975: xvii), often taking the form of ringisho, which Dore (1973: 227) translates as 'proposal submission and deliberation'. This system involves the drafting of memoranda by the involved employees which are gradually circulated among higher management, each on the way putting his seal (equivalent to a signature) upon them, until the decision is firmly taken as a collective one, at least in theory. Such collective decision-making again involves a 'safety in numbers' principle, even if in theory ultimate responsibility is still taken by the managing director or equivalent. In this way Japanese corporate decision-making processes again emphasise the principle of 'safety in numbers' in the allocation of responsibility.

Personal decision-making, in which those affected are generally kin, often also involves collective discussions, especially for decisions such as marriage. This is particularly the case for 'arranged' (miai) marriages, but even for those by introduction or by personal acquaintance there is usually some kind of family consultation or seeking of approval from parents. While this is by no means confined to Japan, the attitudes and values expressed by women in formulating an ideal for a husband often reflect the principles of 'safety'. Not infrequently an advertising sheet is delivered to all the households in Aoyama by a professional marriage broker in which both men and women express their ideals for a spouse: 'she should be no more than 150 cms. in height, have a pleasant personality and have an interest in sports' are the kinds of ideas expressed by men, whereas women are much more specific about the kind of husband they want: often they specify they would like to marry a 'salaryman'(50). One of the prime

(50) In a typical sheet, 32 women expressed their hopes about a future spouse, many of them putting only details of his minimum height, personality traits or sometimes expressing a preference for a second or subsequent son. However, 6 specified they would like to marry a 'company employee' (i.e. 'salaryman'), 2 a civil servant and 8 others 'someone with a university education' which tends to mean one of the above categories, and a further 3 'high school education upwards'.

motivations for this is the security afforded by such a lifestyle. While each sex has to provide details of their age, height, weight, education and hobbies, two other vital pieces of information provided by the men are their monthly salaries and their birth order (since a woman marrying a chōnan will normally have to be prepared to take on responsibilities for her husband's parents and often for the ancestral cult). The security afforded by marrying a 'salaryman' needs to be offset by possible responsibilities involved if he happens to be a chōnan.

Accounts given by women for their marrying by ren'ai or shōkai ('introduction') generally focus on the circumstances in which they first met, often while working at the same company, and sometimes some of the family attitudes for or against the marriage. Accounts of miai marriages, however, tend to be more analytical and weigh up some of the factors involved in the decision, with more reference to family attitudes. Sometimes women felt that as the arrangements had already progressed so far through the nakōdo-san by the time they met their prospective husband (often in a café or another public place) that it was too late to back out if they had no specific objection to the man(51). Others who did have concrete reasons for turning down the man would later accept another candidate if there were no strong reasons against the choice, by which time they may be getting a little older and experiencing parental or family pressures on them to get married soon (before they become 'too old' and potentially 'left on the shelf'). While it is impossible for the researcher to verify all the details of these accounts, the attitudes expressed (even a few years after the event) are still significant. Just one example is that of Mrs. Tsuchida, who turned down four potential marriage partners (each in a miai arrangement) before accepting the fifth because, in her own words, he was 'safe'. Her own reasons for rejecting the first four were that the first one drank too much for her liking, the second wanted her to wait a few years until he had returned from postgraduate study

(51) One woman also mentioned that at this stage she 'took pity on' her suitor because he was 'pitiful' (kawaisō) in his shyness. Their marriage ended in divorce as soon as their son left home to go into the Self-Defence Force.

abroad, the third had hobbies such as mountain-climbing which she felt unable to share in and the fourth had no particular shortcomings in himself but had a father who was difficult to relate to socially and would probably cause problems as a father-in-law. She describes her present husband as having 'nothing particularly eccentric or disturbing about him; he was just ordinary and middle-of-the-road so I married him because he was safe'. Mr. Tsuchida was educated at a prestigious national university and works for a Nissei, a large, secure firm, which are also significant considerations, but this informant's own 'emic' reasons are nevertheless pertinent.

Other cases of marriages being called off also include aspects of safety. One Aoyama man acted as go-between (nakōdo-san) in arranging a match between his secretary and one of his students. All was progessing well until the private detective, called in by the girl's family to investigate the man's background, discovered that in the village where the man's family came from there was not only a high degree of in-marriage between families but also a higher than average incidence of mental disease. Even though the boy's family itself had no history of mental illness, the risk of his bearing a genetic propensity to such illness was sufficient to render him too great a liability, so the marriage was called off(52).

Not all young women want to marry a 'salaryman' above all else, but some are more concerned about the personal qualities of a prospective spouse. Miss Takeuchi, a 30-year old still unmarried woman in Aoyama, for example, speaks of wanting most of all 'peace of heart' (anshin) about a prospective husband (cf. chapter 13, where her situation a described in more detail). This word 'anshin' ('peace of heart') is often used in contexts where security is desired. Adding to the word anshin the Chinese charcter for 'feeling' produces the word anshinkan, translated by Nelson (1966: 312) as a 'sense of security', which is frequently used by informants in the interviews regarding religious practices. The 'an' part of anshin or anshinkan is the same character as the 'an' for anzen, safety, and means, in

安

(52) Although outside the fieldwork area itself, a similar case has been reported to the anthropologist by a student friend at a prestigious national university who wants to marry his girlfriend, and she him, but her parents are opposing their marriage because a distant affine of the boy's mother is a gangster (yakuza) and the risk of marrying someone with even a tenuous link with the underworld is too great for the girl's respectable parents.

effect, safety or security. The 'shin' of anshin ('peace of heart') refers to the 'heart' (kokoro), in the sense of 'soul', 'inner feelings' or, loosely, 'spirit', while the 'zen' of anzen ('safety') refers to 'completeness' or 'totality'. Therefore 'peace of heart' or 'relief' (anshin) means 'safe heart', a 'sense of security' (anshinkan) means a 'feeling of a safe heart' and 'safety' (anzen) means'totally safe' according to the Chinese characters; the same understanding of these meanings is held in Japan, where these words are commonly used in everyday speech.

Several other related words are commonly used to express safety or security. A list of the most common is as follows:

Anzen	安全	=	Safety
Anshin	安心	=	Peace of heart; reassurance
Anshinkan	安心感	=	A sense of security
Buji	無事	=	Safety; security
Bunan	無難	=	Security
Antai	安泰	=	Peace; security
Anteikan	安定感	=	Sense of security
Anzenkan	安全感	=	a sense of security

Mubyō sokusai 無病息災 : 'mubyō' means 'no-illness'; while 'sokusai' means something like 'freedom from disasters' and is equated with buji (safety, security) by Nelson's dictionary (1966: 759). Kenkyusha's dictionary (1954: 1146) translates this expression as meaning 'a perfect state of health'.

'Bunan'(無難) means 'no disaster', and hence 'security'; mubyō sokusai is a common expression used to refer to living a quiet life and it is not infrequently used in religious circles in prayers and occasionally on fuda or some safety charms.

On the questionnaire people were asked when they felt most at ease (kokoro no yasuragi 心の安らぎ). Their answers were as follows:

Table 6.1 : Times when people feel most at ease

In one's family circle:	404	=	67.8%
Sleeping or before sleep:	24	=	4.0%
When one is healthy:	16	=	2.7%
After work or on holiday:	34	=	5.7%
Doing hobbies:	47	=	7.9%
Relaxing alone:	30	=	5.0%
At work:	18	=	3.0%
Religious activity:	3	=	0.5%
Others	20	=	3.3%
Total number of respondents:	596		

Therefore the answer about the family circle stands out conspicuously as the place of relaxation, particularly where one can 'be oneself'. The family is the 'inside' of social relationships whereas 'outsiders' are those without a blood relationship to oneself and are classified as tanin (Doi 1973: 36). Doi further notes (p. 37) that:

'the parent-child relationship is the only one that is unrestrictedly not a tanin relationship, while other relationships become increasingly tanin as they move farther away from this basic relationship . . . This also coincides with the use of the word amaeru.'

Diagrammatically, and realising the distinctions are not so clear-cut in practice, Doi goes on to remark that

'The parent-child relationship where amae arises naturally is the world of ninjō (spontaneously arising feeling); relationships where it is permitted to introduce amae form the world of giri (social contracted interdependence); the unrelated world unaffected by either ninjō or giri is inhabited by tanin, "others".'

(1973: 38).

In this one can perceive a relationship between the dependency relationships in socialisation and the whole emphasis on safety and security perceptible in many other aspects of Japanese society. Some of the other responses listed in table 6.1 are also consistent with this pattern, in that the categories of 'sleeping', 'after work' and'hobbies' generally take place in a domestic setting, as do some of the miscellaneous items classified as 'others' such as 'when in the bath'. It is this setting which is the epitomy of anshinkan,

'a sense of security'[53].

Contrasted with anshinkan is the idea of fuankan[54], feelings of unease or anxiety. The opposite of anshin ('peace of heart') is fuan (不安), formed by a negativising prefix to the 'an' character. On the questionnaire an open-ended question asked about what kinds of things give people the most fuan (disquiet, anxiety, sense of ill-ease, fear, Angst), and these could normally be categorised under the following headings:

Table 6.2 Matters evoking most anxiety

Health	: mentioned	by	29.1%	of	the	sample
The future	: "	"	6.6%	"	"	"
Economic fears	: "	"	4.8%	"	"	"
World affairs	: "	"	3.1%	"	"	"
Neighbourhood relationships	: "	"	0.9%	"	"	"
'No fears'	: "	"	49.9%	"	"	"
'Others'	: "	"	5.5%	"	"	"

(Blank responses are also included in the 'no fears' category because the question initially asked whether the respondent had any feelings of fuan.)

It is noteworthy that many of these fears are the ones to which many of the new religions commonly try to provide solutions, either by magical healing techniques, assurances of economic prosperity for

(53) It may or may not be relevant to note that the Chinese character for the 'an' of anshin, anzen, anshinkan etc. means a 'woman under a roof' and depicts, in effect, the peace or security of home life. Despite the Chinese derivation of the character, its connotations are recognised by the Japanese, and it is not unlikely that the character is consistent also with Japanese sentiments.

(54) I am grateful to Dr. Hirochika Nakamaki for suggesting this comparison between anshinkan and fuankan.

those joining the religion, or by emphases on seeking 'world peace'[55] (cf. Brannen 1968:39-43; Offner and Van Straelen 1963, passim; Davis 1980: 9 and passim; White 1970: 85-8; Dale 1975: 14-19, 94-116; Thomsen 1963: 66, 95-7, 120-121, 164-6; Norbeck 1970: 23-4, 29-30, 32-4, 37-40; McFarland 1967: 79-80). Their appeal is also primarily to thelower middle classes employed in small, often family-owned, businesses or to housewives . The former lack economic security because it is their businesses which are most likely to become bankrupt in a recession and whose livelihood suffers, if they become ill, to a greater extent than that of 'salarymen' in a firm like Nissei. The latter are more affected by fears concerning neighbourhood relationships, the education of children, and personal health, because if the housewife becomes ill there is often no-one except her own parents capable of looking after her and her illness would cause considerable domestic strain (see Lock 1980: 79-80, 218-219). Three solutions to her general situation are (1) to 'stick it out' patiently (gaman suru), (2) to become ill, especially in terms of some culture-bound syndromes found only among Japanese women such as the 'kitchen syndrome' and 'moving day syndrome' - with symptoms such as fatigue, dizziness, headaches, trembling, stomach pains and loss of appetite for the former and similarly numerous non-specific complaints for the latter - for both of which medication is prescribed, plus prolonged bed-rest for the 'moving day syndrome' (Lock 1984: 22-24; cf. also pp. 12-20), or (3) to unburden oneself to a counsellor or sympathetic person who is outside of the normal social network but may be able to offer concrete advice. The latter solution is that offered by the couselling sessions (hōza) organised by religions such as Risshō-Kōsei-kai (Dale 1975; Thomsen 1963: 120-121) and is one of the appeals of such religions[56]. Among Aoyama and Sakurano residents there were a few who had consulted other religious

---

(55) The ideas about ' world peace' mentioned by some of the new religions, especially the Sōka Gakkai, in their propaganda might be compared to those of a Japanese Christian group which is particularly concerned about Israel and supported Eyal Ben-Ari's fieldwork in Japan. Ben-Ari tells me that they have ideas relating to peace in the world which would be achieved by following the injunction in Psalm 122:6 to 'pray for the peace of Jerusalem'.

(56) Doctors are also consulted in this regard. As Lock (1984: 30) notes, 'Japanese society with its careful accounting of obligations and duties is not geared for people to turn to one another for help outside the family or certain prescribed formal groups , . . . The doctor is often the only person to turn to and hence is in great demand . . . Until Japan creates in large numbers its own equivalent of self-help groups and community services, a visit to the doctor is the best action to take . . . '

specialists 'outside of the system' - but therefore in a vital interstitial place within the system[57] - such as a Buddhist priest or a Christian pastor (both cases concerning domestic crises possibly leading towards divorce) and a Christian missionary[58] who taught English to a few housewives in the area (about a child's truancy from school)[59]. Such individuals could be trusted to keep secrets and were known to avoid passing on gossip that they might hear through the gossip circles - which are feared by many housewives who are concerned for their own reputations and standing in the public opinion of the community. Hence major decisions or personal matters needing discussion can ony be discussed with a 'safe' outsider because of the insecurity of the gossip circles.

Choosing a child's name

One type of decision-making which has unforeseeable long-term consequences and for which normal human consultations cannot be fully authoritative is that of choosing a name for a child. The risks involved are a result of the idea that certain names are auspicious and others inauspicious, depending upon the number of strokes in the Chinese characters (kanji) chosen for writing the names. In this kind of decision-making 'safety' involves moving out of the realm of conventional, rational decisions by a group consensus or individual choice into the religious realm. The term 'religious' is justified by the fact that such divination relates to ideas of Fate as a superhuman power outside of man's knowledge which (in theory) can be influenced by the choice of 'good' or 'bad' names for one's child. In practice, few could state categorically that the choice of auspicious Chinese

---

(57) Such specialists could be compared with the interstitial role of counsellors elsewhere such as the Nuer leopard-skin chiefs (Evans-Pritchard 1940: 163-4, 174-5) who have influence but little power.

(58) Several others who indicated in thier questionnaires that they had consulted a Shinto or Buddhist priest turned out to have done so in order to arrange marriage or funeral rites, and in one case to discuss about Buddhist doctrine, but not to have discussed matters of personal crises. The latter were more likely to be discussed with a Christian pastor, if at all.

(59) In time, the anthropologist and his wife also began to assume a similar role as 'outsiders' who were known to avoid passing on gossip to other neighbours.

characters in itself guaranteed a fortunate life for their children, but rather it may be one factor among many others (such as upbringing, education or economic conditions) which could affect the child's future.

A brief explanation of the mechanics of choosing a name by name-divination (seimeihandan) is necessary in this context. According to Takasugi (1979) the various types of 'fates' for a person's life are determined by a combination of the numbers of strokes in certain kanji, as illustrated by the following example from one of my informants, Murata Akira:

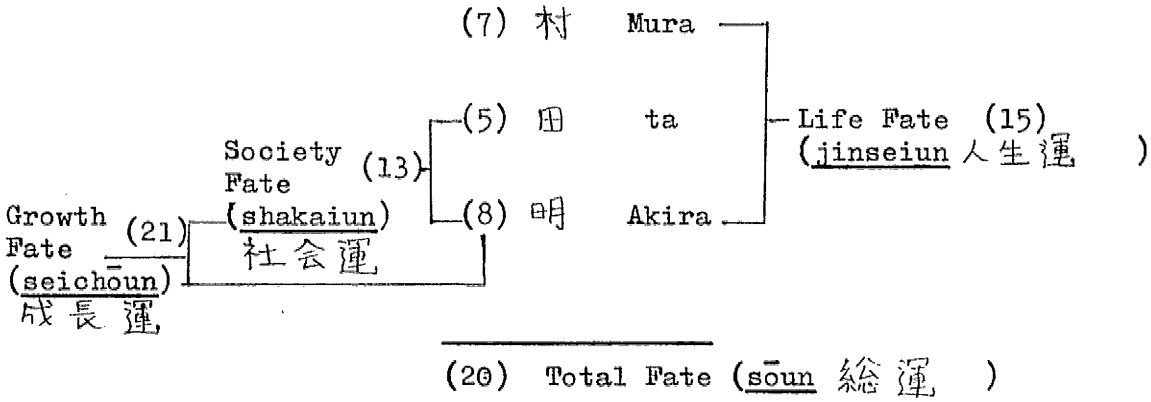

(Names with different numbers of characters in the surname or personal name are calculated on the same general principles, according to whether a character is the first or last in each part of the name.)

For each of these different 'fates' - 'total fate', 'life fate', 'society fate' and 'growth fate' - there are a certain set of numbers of strokes(60) which are 'very good', others which are 'good', others which are 'to be avoided if possible' and still others 'to be avoided at all cost'(61). To some extent, these numbers reflect superstitions such as the avoidance of the number four which can be read 'shi', the same pronunciation as the word for 'death', in so far as the numbers 14, 34, 44, 54 and 64 are all 'very bad' for the 'total fate'

(60) The counting of the strokes follows certain conventions, so that, for example, the '冂' part of the '田' (ta) character is counted as one stroke, not two.

(61) These will hereafter be called 'bad' and 'very bad'.

of both sexes - but 24 is exceptional as 'very good'. The years of major yakudoshis of both sexes (19, 25, 33, and 42) also tend to be in the 'bad' category for boys, with the exception of the numbers 61 and 37 which are apparently less well known and less widespread than the other major yakudoshis (cf. Norbeck 1955: 107; Hendry 1981: 208[62]). The same applies to girls, except that 33 is good for them, which may or may not have any connection with the idea that their yakudoshi is obviated by their bearing a child (particularly a male child)[63]. The only other pattern is that odd numbers tend to be good and even numbers bad (especially multiples of 10, w hich are very bad), which probably reflects ancient Chinese preference for odd numbers as compared to ancient Japanese preferences for even numbers (Bownas 1963:32-33). Other reasons for the choice of these various numbers are obscure[64].

---

(62) Hendry mentions the age of 60 as a male yakudoshi in the area she studied, and similarly 41 instead of 42 as the principal male yakudoshi, but on page 209 she also refers to the age of 61 as a yakudoshi.

(63) '33' might also be read as 'san-san', meaning 'birth after birth', with references to fertility, as in the taking of 3 sips from 3 sake cups in the marriage ritual (Bownas 1963: 70).

(64) The years of nenkis tend to be good, but this may be simply a product of the preference for odd numbers. For boys 'total luck', 'very good' numbers are 5, 11, 13, 15, 16, 21, 23, 24, 29, 31, 39, 41, 47, 52, 57, 61 and 63. 'Good numbers' are 6, 7, 8, 17, 18, 27, 28, 32, 35, 36, 37, 38, 45, 48, 53 and 58. 'Bad' ones are 12, 19, 22, 25, 26, 33, 42, 43, 49 and 62, while 'very bad' numbers are 9, 10, 14, 20, 30, 34, 40, 44, 46, 50, 51, 54, 55, 56, 59, 60 and 64. For girls the numbers are about the same, except that 6, 32 and 35 are 'very good', 21, 23 and 33 are 'good', and 9, 31 and 39 are 'bad'.

Growth fate has no sexual differences, and is similar to the above list except that there has been a migration of some even numbers from 'very good' to 'good' or 'bad' to 'very bad' and of the yakudoshi numbers 33, 42, and 49 to 'very bad'. Odd numbers in the 'very bad' category include 9, 49 and 59, possibly because of the play on words whereby 'nine' (ku) is also associated with the 'ku' in kurushimi, the word for suffering.

The society fate is sexually differentiated with 9, 19 and multiples of 10 being 'very bad', whereas the numbers 11, 21 and 31 are very good, meaning such children will become 'top' in society by having such stroke counts in their names. This applies to both sexes, but Takasugi notes that girls' society fate is less predictable than boys' because they will adopt a different surname at marriage, but nevertheless more numbers are 'very good' for girls than for boys.

The life fate, undifferentiated by sex, similarly puts even numbers (especially those divisible by 10 or containing '4' in the second digit) in the 'very bad' category and other even numbers plus those ending in '9' in the 'bad' category. Takasugi writes that the child may become a criminal if his or her life fate ends in a

The mechanics of choosing a name for a child are influenced by the range of legally permissible characters available, their stroke counts, meanings, sounds, ease of combination with other characters which may be chosen for the personal name, and the way in which these all accord with the immutable surname. An example of the decision-making process can be seen in Mr. Murata's choice of his children's names.

His son's name was formed by the common practice of incorporating a character from the father's name with another one which has an auspicious stroke count. He eventually chose the name Hiroaki (浩明), the '<u>aki</u>' part being the same character as the Akira of the father's personal name. The '<u>hiro</u>' part is nowadays written with 10 strokes but formerly had an extra stroke on the left (in the 'water' radical) so that it can still be counted as having 11 strokes. In this way the auspicious number of 31 was obtained for the boy's 'total fate'.

It took several weeks to decide on a name for his daughter. Before her birth he had decided on the name Yumiko if the child were a girl, because he liked the sound of the name, but he could not decide on how to write it. For any syllable in Japanese there are often several <u>kanji</u> with that pronunciation; also most characters have both a Chinese and a Japanese pronunciation, often very different, and a few have more than one Chinese pronunciation. So there were many ways in which 'Yumiko' could be written. Having decided on the <u>kanji</u> 祐 (9 strokes) for the '<u>Yu</u>' part, and the common female ending 子 ('child'), with 3 strokes, for the 'ko' part, the problem became centred on the appropriate character for 'mi'. His first choice was the <u>kanji</u> for 'beautiful' (美), but this would produce an unlucky total of 33 for the total fate[65]. He then considered the character 'mi' (実), meaning 'fruit', which would give the 'very good'

---

(64) (Continued) multiple of 10, and is liable to sickness, bodily weakness or early death if the life fate is 14 or 34.

(65) It seems his authority for this was at variance with the significance of the numbers given by Takasugi (1979), who writes that 33 is 'bad' for boys and 'good' for girls, perhaps because of the way in which 33 can be pronounced as 'san-san' to mean 'birth after birth' (Bownas 1963: 70). Alternatively, it might be that Mr. Murata was simply looking at the wrong page and made a mistake.

total fate number of 32 but in a girl's name could carry embarrassing sexual connotations. Finally, he settled on the 'mi' (見) of the verb 'miru', to see, which does not carry much semantic content but Mr. Murata thought it gave a 'very good' total fate of 31(66).

The overall incidence of name-divination (seimeihandan) is high, but not easily quantifiable. Overall 24.2% of the questionnaire sample had consulted specialist name-diviners, but in the interviews it transpired that many more had consulted books on seimeihandan while choosing their children's names, producing a much greater overall percentage of people who had used name-divination in choosing a child's name. There are also some differences according to the sex and birth order of children, so that the name of a chōnan is more likely to be chosen by seimeihandan than are the names of other children. Sometimes the parents themselves did not know for certain whether or not seimeihandan had been employed in the choice of a name for one or more of their children because they had let one of the grandparents choose the name. However, most of the parents thought that it was highly likely that the grandparents would have used seimeihandan, and in three cases (two of them involving the parents as partners in the decision-making process) they were sure of the fact(67).

Some indication of the extent to which seimeihandan is used can be derived from the following figures regarding the use of seimeihandan for the eldest child, as reported by 82 parents interviewed. The eldest child, especially if a boy as chōnan, is more likely to be named by a grandparent than are subsequent children, but because several informants had only one child at the time of interview a tabulation

---

(66) Again, his authority is different from that of Takasugi, who considers 31 to be 'very good' for boys but 'bad' for girls. Unless Mr. Murata were looking at the list for boys' names by mistake, these conflicting interpretations of numbers indicate the contradictions between different schools of name-divination. Haak (1973: 208) also reports that specialists differ among themselves on 'good' names and mentions 19 as a 'good' number whereas Takasugi puts it in the bad category.

(67) Only one grandparent definitely did not use seimeihadan in his choice. He took the personal name of the child's father, Kazuhiko (一彦) and of the mother, Seiko (誠子), and combined the first character from each of the parents' names (but changing the 'kazu' reading to an alternative reading of 'ichi' for the same kanji, which means 'one', to form the name Seiichiro (誠一郎) the -ro being a suffix

according to the eldest child provides a greater sample size than for subsequent children.

Table 6.1: Naming methods for eldest children

Choice made by:	Using seimeihandan	Without seimeihandan	Method Unknown
Both parents together	6	8	0
Husband only	21	16	0
Wife only	3	1	0
Seimeihandan specialist (plus parents)	13	0	0
Husband's parents			3
Husband's father		1	2
Husband's father plus parents	1		
Husband's mother	1		
Husband's mother and grandmother			1
Wife's father			3
Wife's mother plus parents	1		
Wife's mother	1		
Column Totals	47	26	9

Therefore the use of seimeihandan is attested in at least 57.3% of these cases, the percentage possibly rising as high as 68.3%. Its incidence is even higher than this when tabulated according to its use for at least one child in a household, because at least three of those who did not use seimeihandan for their first child, a girl, did so when subsequently a boy was born as chōnan(68).

Among those parents who consulted a specialist, one of two courses of action was normally adopted. Either the specialist chose a selection of auspicious names (usually between 3 and 6, but sometimes only one or two) from which the parents selected the one they liked, or else the parents took to the specialist a variety of names

(67) (Continued) commonly used in male names.

(68) In two cases the husaand's parents were involved in the decision-making process, and in at least two of the cases a specialist was also consulted. In a fourth case the husband's parents were asked to choose and the informant (the child's mother) thinks they 'most probably' used seimeihandan.

they had thought about (sometimes using a 'name-dictionary', a book on seimeihandan) for the specialist to check them and (often) select the one which had the most auspicious combination of characters. The specialist is usually a Shinto or Buddhist priest, but is sometimes a neighbour, relative or friend who has an interest in the subject and is considered to be an expert on it by the family concerned. However, even the experts disagree among themselves, as one shataku family discovered when checking a name they liked with the opinions of two experts, both Shinto priests. The first said the name was 'very good' but the second said it was'very bad' and suggested various alternatives. This experience made the family sceptical about the specialists and about seimeihandan, so for their next child they simply chose a name they themselves liked.

Such cases of open scepticism among those who had consulted seimeihandan are relatively rare, and all involve a personal experience of an inconsistency between the expectations arising from the choice of an auspicious name and the actual experiences of the child. For example, one chōnan suffered from osteomyelitis at the age of 9 months and had to be hospitalised for 3 months; another boy, whose name was chosen by a seimeihandan specialist, who said the child would be healthy because of his name, contracted an illness(69) at the age of four which his mother regarded as inconsistent with the expert's predictions. Such illnesses in childhood may be more closely linked with the naming procedures in the minds of the parents because of their closer proximity in time, but many parents refrained from giving an opinion on whether or not the expert's predictions had been fulfilled simply because it was too soon to tell. The overall tenor of a person's life can only be assessed in retrospect, by which time those who named the person are normally dead themselves or are no longer interested in the question of whether or not the seimeihandan specialist's predictions have been fulfilled (even if they can remember by then what the expert said)(70).

---

(69) Kawasaki byō ('Kawasaki disease'): I am unable to find a Translation of this into English.

(70) The question is often of more concern to the recipient of the name (as he or she becomes older) than to the one who bestowed the name. For example, one man in the shataku, Mr Yamamoto, attributed his illness over many years not only to a medical glandular problem but also to his parents having conferred on

Therefore there often occurs a suspension of disbelief when using seimeihandan because its effect is untestable except by a subjective opinion many years later. The grounds for 'belief' are also nebulous, involving the assumption that a particular person's fortunes in life can be directly attributable to the characters in his or her name, whereas many of those who profess a 'belief' in seimeihandan would, when pressed, only go so far as to say that the name is only one among several important elements in determining one's fortunes in life, and can suggest no method of isolating the influences of these different variables. Nevertheless, when first questioned about why they claim to believe in name-divination they speak as if there were a one-to-one correlation between the two factors by mentioning some historical figure who was notoriously unfortunate or else very successful and claim that that figure had a particularly bad or good name(71). Others appear to have used a similar reasoning when naming a child after an agnatic relative(72) or parent whose life seemed to have been relatively successful or prosperous and who therefore could be assumed to have an auspicious name. A variant of this is the use of the same number of strokes in the corresponding characters but with a change in the kanji used, as in the family who were expecting a girl and were unprepared when a boy was born, so, needing a name soon for the registration of the birth, took the father's personal name and changed the final element of -zo (三) to another 3-stroke kanji pronounced -ya (弋), the shape of which the mother considered to be aesthetically pleasing. This indicates a positive self-assessment of the father's life and achievements as a university professor(73).

---

(70) (Continued) him a 'bad' name. Some children become anxious about their names after watching T.V. programmes about seimeihandan, according to some parents.

(71) The examples of historical figures cited by informants seem to be derived from those given in books on seimeihandan written by practitioners of the subject.

(72) I.e. one with the same surname: some families where the husband is a yōshi might name a child after a relative on the mother's side instead.

(73) A similar practice, but one involving no professed belief in seimeihandan, is reported by a shataku man who named his son after himself 'because I have no property to pass on to him so I can only give him my name as an inheritance.'

Since 'proof' of any objective validity in seimeihandan rests on such subjective grounds, it is at first surprising that virtually all those who have chosen a child's name by seimeihandan assert a 'belief' that the stroke-count is important, the few who doubt being either those whose experiences have not correlated with seimeihandan theory (as detailed above) or else a few who say they consulted seimeihandan in order to please their parents, who considered it important(74). Most of the minority who had made the effort to consult an expert, often involving paying a fee or giving an appropriate present, profess some 'belief' in seimeihandan (except for a few who consulted the specialist at parental instigation), but many others also put considerable time and effort into consulting name-dictionaries and trying to work out auspicious names by themselves. Nevertheless, when asked directly how much they 'believe' that their choice of a name can affect their child's future fortunes, very few are prepared to assert confidently that they can influence their child's destiny to that extent. A few say they can 'to a limited extent' but say that the child's fate is largely immutable, fixed already by some greater power (or, according to one informant, by a Fate indicated by the position of the stars and planets at birth)(75). The majority, however, say that they 'half believe', 'do not believe too much' or 'believe a little', while not professing disbelief. Given the presence of so much uncertainty or doubt regarding the 'belief' side of seimeihandan, it is unlikely that this could account for the widespread use of seimeihandan in practice. To some extent parental or social pressure can be discerned, especially regarding a chōnan (even more a chōnan of a chōnan) or a first grandchild of either sex, but even this does not appear to be a decisive factor in most cases where one spouse alone or both parents together choose the name, sometimes after months of deliberation(76). Some other

---

(74) This was especially the case when choosing the name for a chōnan but in such cases the infant's grandparents weee often involved in the decision-making process too.

(75) Only one man considered "Fate" to become operative from after the naming of the child.

(76) Some parental pressure might come from the fact that the maternal grandparents are often in the same house as the mother in the weeks directly before and after the birth and her time in hospital, but this would have little influence upon husbands who choose the name and are often living elsewhere, especially as the name is often decided to at least some extent before the woman returns to her natal home.

motivation apart from belief or 'parental pressure' must be operative in addition to account for the widespread use of seimeihandan for naming children.

This 'other motivation' is again that of safety. It is openly expressed by many informants in terms such as

'I don't particularly believe in seimeihandan but I consulted it to be on the safe side, because if my child were to have an accident and I had not taken care to choose an auspicious name I would feel guilty or responsible'.

These and similar sentiments were voiced by many of those interviewed, some stressing the feeling of 'peace of mind' or 'reassurance' (anshin) which comes from having a name checked by a seimeihandan expert who says it is auspicious, others expressing a fear of being held responsible by the family or neighbours if they had neglected to use seimeihandan and their child suffered an accident, others emphasising the feelings of reassurance or security (anshinkan) which come from knowing one has done one's best for one's child in choosing an auspicious name. Very oftenthe stress is on avoiding a 'bad' stroke count (77) rather than finding a 'good' one (i.e. one which is said to mean that the child will become rich or prosperous, etc.). Such avoidance of inauspicious kanji is one motivation behind having the name one likes 'checked' by a specialist, whereas those who go to an expert first and choose one of the names suggested by the diviner seem to be more conscious of the beneficial effects which are supposed to derive from the name. It is when their child then has a serious illness such as osteomyelitis that they become more aware of the discrepancy which is not noticed by the majority who seek more to avoid a 'bad' name than to find one which would supposedly guarantee health or prosperity. Inauspicious stroke counts are 'dangerous' and to be avoided and it is this fear which motivates the majority of informants to consult a name-diviner rather than the positive benefits said to come from an auspicious name. Such positive

---

(77) warui jōken / jikaku o sakeru
悪い 条件 / 字画を避ける

benefits are sought in more 'practical' ways such as education or inheritance.

This use of fortune-telling provides an external authority for decisions and is therefore consistent with the kinds of decision-making already discussed, whereby personal responsibility is minimised through being shifted onto the less personal business corporation, or ultimately onto the company president. Where such 'safety in numbers' in group decisions is impossible because of the nature of the decision (the naming of one's child), 'safety' may be sought in superhuman authority. This is most clearly seen in the case of one Aoyama family who wrote out the names chosen as auspicious by a seimeihandan onto separate slips of paper, put them face down in front of their Butsudan and then asked the husband's mother to choose one of them with her eyes shut. That was the name given to their chōnan, chosen, as it were, by the ancestors with no apparent 'human' element entering into the random selection of auspicious names. However, for other families who use seimeihandan the choice is still one in which the gods, or Fate, play a part and in some sense take ultimate responsibility for the decision. Two families asked a Shinto or Buddhist priest(78) to choose the name totally on their behalf, without the parents having any choice among alternatives, while on a more general level the fact that Shinto or Buddhist priests are often experts in fortune-telling of various types indicates that divination is seen as a means of communication with the kami or hotoke and of ascertaining their will. For many, it is an idea of Fate which lies behind the use of divination, but the extent to which they think they can influence that Fate by human action such as the choice of an auspicious name varies among individuals, generally lying closer to the pole of resignation to Fate than to that of active influence in the workings of Fate. The more general 'passive' approach sees Fate more as a dangerous force to be avoided than as a potential benefactor which can be channelled into advantageous courses, whereas the minority with a more 'active' approach seek not

(78) One of these is the Matsui family, whose reasons for asking the Shinto priest to choose the name are given in chapter 9.

only the avoidance of evil Fate but also the attainment of beneficial Fate. Both approaches nevertheless seek some kind of security for themselves or their children and avoid the personal responsibility for the decisions by making use of an impersonal system of rules to bring about the safety or security which they desire. Safety comes through adherence to the rules, in this case those of seimeihandan, and demonstrating to one's family and society at large that one has conformed to expectations and done what one can to give one's child an auspicious name, so that if any misfortune befell that child one would be clear of public criticism or blame in this particular area.

Fortune-telling and marriage

Whereas commercial decisions involving long-term uncertain factors can be taken collectively, personal decisions involving far-reaching unknown consequences, such as those for choosing a spouse or naming a child, to a large extent rest on individual decisions and involve some individual assumption of responsibility. It is such personal decisions for which some external, relatively impersonal, authority is required that often involve the use of fortune-telling(79). For naming a child seimeihandan is the principal kind of divination available(80), but there are several others which may be employed for those considering marriage. In so far as the decisions about marriage are based to a far greater extent on factors such as the

---

(79) Small businessmen who are self-employed and much more affected by business cycles are generally reputed to be more 'religious' than the 'salaryman' type of white-collar employees found in Sakurano and Aoyama. Some informants told the anthropologist that such merchants often use fortune-telling in making their business decisions but I have been unable to investigate this in detail for myself.

(80) One case of a different kind of divination in which the gods chose the child's name, it is claimed, is that of Mr Yoshioka, the Nissei catering manager, who says the name of his chōnan was revealed to him in a dream by the kami (See also chapter 12).

other's economic and social background, the presence of hereditary diseases in the person's family, personal characteristics (including salary and birth order for men, appearance and talents for women), temperament and personal emotional ties (in 'love marriages'), the fortune-telling aspects of the marriage decision are often used to legitimise or validate decisions made on other grounds. These kinds of divination are often regarded somewhat less 'seriously' than is the use of seimeihandan in choosing a child's name, and are often classified by the informants as actions performed for the sake of 'fun' or 'curiosity'(81).

The following list of the various types of fortune-telling is ranked in the approximate order of seriousness by which most Japanese regard their prognostications concerning marriage. It should be stressed, however, that the final item, a Japanese equivalent of Ouija boards, is regarded seriously as a frightening and dangerous practice by some who have become involved and found it to be no trifling affair. Although it has (perhaps) one of the weaker links with the present discussion of marriage decisions, it has one of the stronger links (among those in this list) with the more serious and dangerous aspects of the occult, ranking close to consultation with mediums.

a) Mediums

In the questionnaire sample only 13 people out of 576 (2.3%) admitted to having consulted a medium, but in the interviews one man admitted to it who had not done so on paper. A converse case is that of a married couple in Aoyama, both of whom had written on their forms that they had consulted a medium but when asked about it denied having done so(82). Considering also that 91 people left the question blank (many of them meaning by this that they had not consulted a medium, but a few perhaps avoiding a 'Yes' answer) this percentage

---

(81) See also chapter 11.

(82) If one of them had written this and not the other and then denied it in the interview the questionnaire reply could be regarded as a mistake, but it is less likey for both to make an identical mistake in this, especially as the wife in particular is locally reputed to be 'very religious' and as the couple could not conceive their first child for 11 years, something which they might have consulted a medium about.

may be taken as a minimum, the 'real' percentage being perhaps a little higher.

Of the 8 women and 6 men who admitted to having consulted a medium, including the man who admitted to the practice in the course of an interview, 3 women and 4 men were willing to give details of their reasons for going. These were:

Questions of suitability in marriage:	2 cases
Regarding a medical problem:	4 cases
Consultation with the dead:	1 case.

The procedure for visiting a medium was given in most detail by the woman whose younger son died in 1967; not long after his death she visited a 60 year old medium in a nearby city(83) who had been recommended by a neighbour. The mother took with her a gift of high quality rice for the medium plus a 'gift'of 1,000 yen, on the advice of the neighbour who recommended this medium, because no formal fee was demanded. Her description of the seance itself is rather vague, focussing on what was said to her:

"The spirit became maifest in the medium but at first said nothing. I was overwhelmed by the experience, and especially when the spirit at last did say something, telling me that my friends should look after me now that one of my sons has died. I then made offerings of many bean-jam cakes (manju) and bananas to my son because he liked such fruit."

Fuller descriptions of the practices of Japanese mediums are given by Blacker (1975) but this is one area which the present writer did not investigate by personal observation, since consultations of mediums are relatively rare and infrequent(84). Details of those who consulted mediums about medical problems are given in chapter 9, but the present concern is with those who consulted a medium about marriage and their own accounts of their experiences.

---

(83) A city reached in less than 10 minutes by train from Nishiyama.

(84) Though none of the local residents known to the anthropologist consulted a medium during the period of fieldwork, an interview was conducted with the Nissei catering manager who calls himself an 'amateur medium', as described in chapter 12.

An Aoyama housewife aged 36 claims to be a Christian because she went to a Christian middle school and had also attended Sunday school. She has no connection with any church now, but she says that 'Buddhism has many idols which are prayed to by many people seeking divine benefit, but this pratice was criticised and opposed by myschool . .. So I preferred the Christian way without idol worship, but as a Japanese person I was interested in things to do with fortune-telling too.' Twelve years ago, just before marriage, she went to a medium on 'two or three' occasions to ask about work and marriage. She had already met her present husband but was confused about whether or not she should marry him, so she asked the medium whether or not it would work out alright(85): 'The medium gave me a kind of special message, and as I listened I felt it was like a miracle (fushigi): the spirit approved of our marriage so I went ahead with it'. One result of the marriage, however, was that she ceased consulting mediums, because her husband 'hates anything to do with mediums, Shinto or Buddhism, and has stopped me from going to such people any more.'

Mr. Takahama is a 29 year old shataku resident who comes from the north-east of Japan, an area generally reputed to be a stronghold of mediumistic and occult practices (cf. Blacker 1975; Hori 1975: 237). As a university student he accompanied his grandmother out of curiosity to see what happened when she visited a medium. She often consulted a medium if any misfortune befell the family or if she had an illness which lasted for as long as 2 or 3 months, so on average she would visit once or twice each year to ascertain whether the problem had been caused by a curse (tatari) or if it could be rectified by the medium's intervention or by fulfilling the demands of the malignant spirit. On the occasion when Mr. Takahama accompanied his grandmother in 1974, his elder brother was about to marry and the grandmother was concerned about whether or not the marriage would work out well. Eight years later Mr. Takahama could no longer recall exactly what the ancestors said through the medium, but his brother went ahead with the marriage and in Mr. Tkahama's opinion appears to be 'quite happily married'. It seems that the decision to marry had already been made and was unlikely to have been affected much

(85) She may have been concerned partly because her husband's work involves long trips away from home and she would have been aware of that aspect of his work before dediding whether or not to marry him.

by the grandmother's consultation of the medium.

b) Seimeihandan

Since a woman's name changes at marriage, her 'fate' can also be said to alter according to the suitability of her new surname by seimeihandan. This is one reason why some parents are less concerned about finding an auspicious name for a girl than they are for a boy. Sometimes a girl's possible new surname will be checked for its significance by a relative who knows about seimeihandan techniques, by the go-between or by the girl herself. The implication behind such behaviour is that 'Fate' is something manipulable rather than fixed, and is fluid enough to be altered significantly by the adoption of a new surname at marriage. However, those who use seimeihandan in this way do not verbalise such concepts of the nature of 'Fate' but instead use seimeihandan as a means of divination to ascertain if a prospective match is likely to be happy or unhappy. It is subject to manipulation because the 'good' or 'bad' aspects of the diviner's findings can be emphasised according to one's predilections, the clearest example of this being that of a man whose several miai marriage arrangements had been hindered or opposed by his mother on the grounds that the couple's names(86) or horoscopes were incompatible. It appeared as if she wanted to keep him at home with her and did not want her place in his life taken over by a wife, but in the end her son did marry and move out of the home despite a certain amount of friction with his mother over the match.

c) Palmistry

The prevalence of palmistry is indicated by the statistic that as many as 30.8% of the overall sample had consulted a palmist at some point in their lives, often involving an outlay of 2,000 yen or more. When correlated with age, it is found to rise from 20% in the 20-24 age bracket to 47.1% of those in the 25-29 age group and to drop for older ages. This indicates two things: (i) that the practice is probably on the increase(87), and (ii) that it is

(86) Normally the man would not be affected by any change of name unless there were a prospect of becoming a yōshi.

(87) The question asked whether informants had ever consulted a palmist, so the fact that a higher proportion of younger people than older ones had done so indicates a rising popularity in the practice. Some older people might have answered 'No' because they

particularly popular among those who are of marriageable age. During the interviews virtually all the women who were asked when they first consulted a palmist replied 'before marriage' and often their principal interest in consulting the palmist concerned the timing and happiness of their future marriage.

Since marriage involves greater changes in the life-style of the woman than of the man and is a timefor which many young women prepare themselves through the cultivation of various domestic skills and by private hopes and expectations, it is not surprising to find that 40.3% of the female informants had consulted a palmist, as compared with 24.7% of the men. Often the men had consulted a palmist when out with their girl-friends - and usually, it seems, at the girl's suggestion - but others had consulted a palmist regarding their health or business matters. An application of modern technology to fortune-telling was reported by one man whose palm was read by computer: he was by himself at the time and among the options available for predictions (such as those concerning marriage, health, business or promotion chances, each costing 500 yen in 1972 per analysis and print-out) he chose the one on health. The computer said he would have a major illness during his thirties and at the age of 35 in 1984 he is still waiting to see if this will be fulfilled.

Examples of predictions or statements given by a palmist are given in table 6.2, classified according to whether or not the informant considered the statements to have been true:

---

(87) (Continued) had not done so recently, but in the interviews it was clear that most had understood the question correctly, with people in their forties or fifties reporting their only time of consultation as twenty or more years previously.

Table 6.2: Informants' assessments of palmistry statements

Male informants	Female informants
1) Statements said to be true	
"The palmist's analysis of my past life and my character were accurate but I can only remember one of his predictions and that did not come true....." (Mr Fukasawa)	"I would be 'separated from my first child' - and I had a miscarriage, in fact".
	"I would marry a gentle person." (Mrs. Matsumura[88])
"He figured out that I was a musician from my soft hands."	"I asked the palmist if my husband should change his place of work. Now I can't remember what the palmist said but he did change his job and it has worked out alright."
"His reading of the past fitted the time I became ill, but .... (Mr Yamamoto[89])	"He was right when he said that my stomach is not very strong"[90]
	"My palm was read twice when I was 15, and the predictions about the kind of work I would do and whom I would marry came true exactly: I worked as an 'office lady' after leaving school and I got married at the age of 23."[91]
	"He said that I lead a hard life, as he saw my rough hands."
2) Statements said to be untrue	
"He said I would have to look after my mother once I reached the age of 26 or 27, but now I'm 30 and my mother's still quite healthy." (Mr Fukasawa)	"He said my hands were those of a murderer!"

(88) Her husband is very quiet and withdrawn.

(89) His glandular problem causing excess fluid retention is obvious from his appearance, and had persisted for 20 years before his visit to the palmist.

(90) Many Japanese are concerned about stomach weakness or illness, and make use of the mobile x-ray units provided by the city government, used particularly to check for stomach cancer (cf. also Lock 198): 86-88).

(91) This is a very common career pattern for Japanese women: 'office lady' refers to a general clerical assistant who also makes the tea etc.

(A further three out of the ten men interviewed about palmistry said the predictions had not come true, but could not give specific details.)

(A further 5 out of the 21 women interviewed about palmistry said the predictions had not come true but could not give specific details. Three others said they had been fulfilled "only in very general terms" or "only a little".)

3) Predictions not yet confirmed or disproved

"He said my condition would improve, but so far it has not."
(Mr Yamamoto)

"He said I would eventually set up my own business."

"He told me I would have a major illness in my thirties."

"He said our daughter would be would be more successful than her parents."
(The girl was 4 years old at the time her mother was interviewed).

In the same way as for seimeihandan, the degree to which 'belief' in palmistry can be assessed is very problematic. To some extent those who consult a palmist, even if out of curiosity or as fun, may be said to be predisposed to 'believe' by their willingness to pay the relatively high fees demanded, especially as they are often students or younger people on relatively low incomes. Any prior disposition to 'believe' is either reinforced by a few memorable statements which seem to 'fit' (ataru) with experience, while many of the general, non-specific statements are forgotten. Scepticism can arise from a prediction which clearly does not fit the facts of experience, but the test does not come for several years, by which time often the person has forgotten the details of what was said. The long time-lag involved between prediction and fulfillment for both seimeihandan and palmistry tends to foster an outlook of 'belief' because by the time any experience contradicts the prediction, often the details of the divination are forgotten, or else the question is no longer so relevant to the person concerned as it was when the diviner was consulted.

Nevertheless, relatively few individuals were prepared to confess a firm 'belief' in palmistry, these being the first, second and fifth women cited in Table 6.2 regarding predictions they thought had come true. Even these, however, can respond to different aspects of the

predictions in different ways, as shown by the comments of Mrs Matsumura, the shataku woman, who reported that the palmist predicted she would marry a 'gentle person'. Her first marriage had ended in divorce, so when she married again it was 'important for me to make the right decision this time'. Therefore she consulted both a palmist and an astrologer about her compatibility with her prospective spouse and about a suitable date for their engagement and marriage(92). She says that she is happy if there are good predictions and takes care if there are bad because then, she says, it is her own fault if she did not heed the warning. In this way personal responsibility is accepted for misfortunes if these could have been averted by heeding the warnings whereas good fortune is accepted as a gift from higher spiritual forces acting in her life.

This attitude is again concordant with the feeling tht 'safety' can be attained through predictability (cf. Benedict 1946: 26-8). This woman's disastrous first marriage meant that she wanted to find a predictable, dependable and 'safe' husband the second time. His reliability was vouched for by his sister, her friend who introduced them to one another, and both of them had a responsibility to the sister, with whom they would often be in contact, for the success of the marriage(93). However, this human guarantor still needed to be supplemented by superhuman assurances that it was right, and these came from fortune-telling.

d) Astrology

The majority of those interviewed about astrology had not consulted a professional astrologer but had read their horoscopes in a magazine or newspaper. Relatively few newspapers carry a

---

(92) They had met because she was a friend of his sister's, who had introduced them to one another. The sister therefore acted as a kind of go-between and guarantor for the match. His personality is so quiet and withdrawn that it may have been difficult for him to find a wife by himself apart from miai or introduction, so he was perhaps more open than many other men to the idea of marrying a divorcee.

(93) The break-up of her first marriage was partly responsible for Mrs. Matsumura joining Reiyūkai, one of the 'new religions', of which her present husband and his sister are members, although Mr. Matsumura is no longer actively involved. This religious tie may be a further bond of reinforcement for their marriage.

horoscope column, and then on a weekly rather than daily basis[94], so that many informants said they only saw their horoscope when looking through a magazine at a hairdressing salon or the waiting room for a doctor or dentist, and then it was not that they were looking out for the column but rather they read it 'by chance' and 'out of curiosity'. However, the magazine and book departments of most local stores sell astrological compendia or almanacs for each year, often as pamphlets for each star sign, and their books on fortune-telling in general amount to at least one or two full shelves containing a wide variety of titles. Several informants had bought such books and developed an interest in one or more types of fortune-telling, often when in their teens or early twenties, but had tended to drop some of these interests in later life as family or work responsibilities took up more and more of their time[95].

Most people claimed their interest was more at the level of 'fun' or 'curiosity' than 'belief', several saying they had a 'half-belief' or else had an interest which was 'half-curiosity' or 'half-play'[96]. Only a few informants, all women, claimed any greater measure of 'belief'. One of these was Mrs Matsumura, the one who consulted an astrological almanac to help decide on a suitable day for her second engagement and wedding, in conjunction with the Buddhist six-day cycle in order to find also a taian for these events. Another woman says she believes because a fortune-teller[97] correctly predicted she would have a minor traffic accident, and so she now consults a weekly horoscope column on behalf of each member

---

(94) Of the three major national newspapers, only the Mainichi carries an astrological column.

(95) Two well-educated men had developed such interests in earlier life and both now deny any belief in it. Both of them had read several books on astrology, initially to ascertain if the predictions of a man named Itokawa had been based on astrology.

(96) The Japanese word asobi is normally translated as 'play' but in this context the word 'fun' seems a more natural English rendering, as in the expression 'just for fun'.

(97) The fortune-teller was both astrologer and palmist; the informant could not remember which method was used to predict the minor traffic accident but the effect on her life has been that she now pays close attention to weekly horoscopes.

of her family 'to see what we have to be careful about'. Another woman reads her horoscope daily and claims it correctly predicted illnesses and recoveries in the lives of her children and mother-in-law, although the illnesses concerned were relatively minor ones. She says that 'if the stars are in the wrong arrangement things will go wrong' so at the beginning of each year buys an astrological book to see what the future holds.

Several others say they read their horoscopes every week but are less willing to admit to a belief in it - one lady who supported the Communist party and appeared superficially to have nothing at all to do with religion being embarrassed to admit that she 'sort of' believes in astrology and that she thinks the character judgements often fit the people concerned. A few others restricted their 'belief' in astrology to the area of character analyses rather than prediction of the future, an emphasis which accords with findings inBritain (cf. Towler 1974: 152) that fortune-telling can become a kind of 'working class psychoanalysis'. This element is present also among many middle-class Japanese informants, but still tends to be overshadowed by the predictive elements, at least in astrology. This is largely because of the popular reading of horoscope columns rather than the more individual consultation of professional astrologers, whereas the character analysis elements are often used in palmistry to build up the client's confidence in the diviner.

However, the kind of astrology which is more commonly used for character judgement is the Chinese zodiacal year of birth. Almanacs (koyomi) bought at most Shinto shrines, many Buddhist temples and some bookshops include this information in addition to details about auspicious and inauspicious days (taian etc.), dates of religious festivals and aspects of folk medicine(98). Among those interviewed, several mentioned that they had consulted

---

(98) See Lock (1980:97) for a list of foods which are 'incompatible' if eaten together, producing illness. Lock speculates on whether the list may have derived from yin/yang theory, but it may also be linked to a general idea of categorisation which is consistent with purity and pollution concepts. The same might be said of the following discussion on marriage compatibility (aishō).

such almanacs before marriage to check their affinity (aishō) according to their respective years of birth by the Chinese cycle, so that, for example, a woman born in the year of the sheep is said to be an unsuitable partner for a man born in the year of the tiger. This practice appears to be more common in the village studied by Hendry (1981: 139-140) than in Ueno, and hardly any of the Ueno informants used an incompatible aishō as an overt reason for declining a marriage proposal(99). Usually those who consulted aishō had already made up their minds one way or the other, and among those who had decided already in favour of marriage(100) an auspicious aishō brought reassurance (anshin) but an inauspicious aishō was dismissed by the claim that they 'did not really believe in' the aishō(101).

Consultation of aishō and other forms of divination is more often practised before marriage particularly by girls, as a means of determining the other's personality or compatibility. In terms of professed belief, girls under 30 are more likely to say they think that the position of the stars at birth influences one's character, as shown by Table 6.3:

Table 6.3: Professed belief in the position of the stars at birth indicating one's personality.

	Percentage professing belief	No. in sample
Males under 30 years old	14.9%	7/47
Males over 30 years old	7.5%	27/360
Females under 30 years old	26.1%	6/23
Females over 30 years old	12.2%	28/229

(Total sample size = 659 people; 8 of the 667 questionnaire respondents left this question blank).

(99) The only case is that of the mother who did not want her son to marry yet and sometimes said the aishō was incompatible.

(100) The sample of informants is biased in favour of those who had married, but among those who discussed with the anthropologist about prospective spouses before their present one, aishō in the sense of incompatible animal years was hardly ever mentioned.

(101) One such couple with incompatible aishō had been married 11 years at the time of interview, had 3 children, the second one a boy, and spent more time together than most couples!

It is not unlikely that professed belief declines after marriage partly because of experiences contrary to the expectations arising from aishō compatibility: some couples with a good aishō may find they have marital problems while some others who married despite a bad aishō seem to have a relatively contented marriage.

At the level of practice, there is again a high concentration in the lower age groups of those who say they have 'practised astrology' (hoshi-uranai o suru[102]), which usually meant reading books on the topic, sometimes trying to cast their own horoscopes, and occasionally consulting a professional astrologer. As with palmistry, the expected increase with age among those who had never consulted such fortune-telling methods is reversed, with the incidence in fact declining generally among older generations, indicating that the popularity of such practices has been rising in recent years, especially among younger people[103]. The relevant statistics are presented in Table 6.5:

Table 6.4: Proportions of people who had ever consulted astrology or palmistry according to age groups

Age groups	Astrology	Palmistry
20 - 24	60.0%	20.0%
25 - 29	56.9%	47.1%
30 - 34	34.4%	37.3%
35 - 39	27.5%	29.3%
40 - 44	25.2%	21.7%
45 - 49	5.1%	21.3%
50 - 54	11.4%	33.3%
55 - 59	18.8%	38.7%
60 and over	20.0%	45.5%
Number of respondents to question:	594	601
Overall percentage of people who had consulted this type of divination:	28.3%	30.8%

These figures confirm what various women reported in the interviews: that as teenagers or young women prior to marriage they

(102) Literally: 'to do astrology'.

(103) The expected rise in the older generations is seen to some extent, but more for palmistry than for astrology, indicating perhaps that astrology has become popular much more recently.

had read their horoscopes avidly, sometimes daily, and had an interest in fortune-telling mainly for what it could tell them about marriage. Two unmarried women interviewed reported the same, but the married women said their interest had waned considerably after marriage.

Essentially their motivations are still largely governed by a quest for security, both in terms of the security of marriage itself and the security of having a suitable husband. A number of young men also consult fortune-tellers about marriage, usually to find out if their present girl-friend is deemed to be suitable, but most young men consult about their future employment or promotion prospects - the kind of security about which men are often more concerned. Both seek a supernatural clue to their future security or 'safety'.

e) Blood groups

The increased incidence of fortune-telling among younger women, especially teenagers, has also been noted by Morioka (1982) on the basis of a national survey, but an increasingly popular form of divination which Morioka did not question about is one involving blood groups. Each person's group is tested at birth and recorded in his or her 'health handbook' (kenkō techō) issued free of charge to each parent by the municipal council, so there is a widespread knowledge of one's group(104). It is thought that one's blood group indicates one's character, so that, for example, 'B' people are said to be sociable, creative and to think about both sides of a question, while 'O' people are said to be cheerful and intelligent. Like character divination based on the animal years of birth or one's star sign, blood groups are becoming a form of divination among younger people considering marriage compatability. It is a popular idea among younger women especially, as indicated by their professed beliefs shown in Table 6.5:

(104) An experiment conducted by all schoolchildren in primary school is to test their own blood groups, which also reinforces their awareness of their own group.

Table 6.5: Professed belief that blood groups indicate personality

	Percentage professing belief	No. in sample
Males under 30 years old	48.9%	23/47
Males over 30 years old	35.0%	126/360
Females under 30 years old	65.2%	15/23
Females over 30 years old	40.2%	92/229

As noted for the other types of divination, professed belief in this one is also held more by younger than older people and more by females than males. It is fostered in part by members of university 'blood donor clubs', who seem to take a special interest in these matters even if not all are convinced of the validity of the correlation(105), and partly by the media in which these ideas are sometimes reported or discussed(106). It has an appeal to many people because it appears to be 'scientific' but in fact may be a 'pseudo-scientific' folk belief rather like those for yakudoshis and fire-balls(107). One appeal of the idea is that blood groups are fixed and unchanging from birth: however, some informants said they had doubts about palmistry because the lines on one's palm can alter during one's lifetime, but others said they had confidence in palmistry because the lines do not change. Logically there is relatively little difference between the claims that one's personality is indicated by one's blood group and that it is shown by the lines on one's palm, in so far as

---

(105) Evidence for this statement is impressionistic, based on conversations with university students, rather than quantitative data based on questionnaire statistics.

(106) One informant told the anthropologist that on a T.V. programme the relationship between blood groups and personality was tested by a computer and no correlation between the two was found.

(107) See footnote 106 above regarding the probable falsity of the belief, although it is difficult to objectively classify 'personality types' since it involves some subjective assessment of a person.

The pseudo-scientific ideas about yakudoshis and fire-balls (balls of fire said to be seen in graveyards etc. at night and often thought to be ghosts of some kind) are discussed in chapters 4 and 14 respectively.

both are physical features of the body[108], presumably both governed by heredity[109], so there is little ground for asserting that one kind of divination is more scientific than the other (despite the scientific veneer to the blood group belief). In practice both tend to be utilised for similar purposes by younger women to gain some indication of the character of a potential spouse before any lasting commitment is made.

The data provides no clear discernible correlation between types of marriage in terms of miai, shōkai or ren'ai and consultation of these various types of divination, for the following reasons:

1) These types of marriage were ascertained through interviews rather than the questionnaire, so the sample size is realtively small.

2) Within the small sample, younger couples, who, as shown above, are those who have usually used some form of divination before marriage, contribute an even smaller sample.

3) Within the small sample of younger people whose type of marriage was ascertained, several different types of divination had been used, either separately or in conjunction with one another, and the extent to which 'belief' in them was professed by the various informants also varied. The sample was too small to provide meaningful statisics for the group who had used some kind of divination versus those who had not, let alone to give meaningful correlationsfor each type of divination.

4) Most important of all, the boyfriend or girlfriend about whom the divination had been consulted was often not the one whom

---

(108) Compare the English 'folk belief' that red hair indicates a fiery personality - although technically red hair is a type of brown hair when analysed under a microscope.

(109) Perhaps the palm lines are affected also by one's environment and how one uses one's hands, but presumably they are largely determined by the hereditary factors governing the physical development of the hand.

the person eventually married. One young woman, for example, had consulted a palmist with a former boyfriend (in a ren'ai - type of relationship) but had not consulted a diviner about her present husband from a miai marriage. Many others had consulted diviners about when they would marry long before they had their first steady boyfriend. Those whose prospective husbands had been checked out by fortune-telling sometimes were doubtful about the use of divination at the time but used it because parents had suggested its use, while in other cases the parents had consulted a diviner on behalf of their daughter or son. These cases usually involved miai arrangements and tended to be ones in which the parents had doubts already about the suitability of a partner, so such cases did not often end in a marriage.

It is not unlikely that there is a definite relationship between these types of marriage and the use of fortune-telling, but this relationship would need to be ascertained by a rigorous investigation of a larger sample than is available from Ueno. However, there does appear to be an inverse relationship over time between miai marriages and the use of fortune-telling before marriage, as indicated by the fact that the former has declined recently (cf. chapter 2) and the latter has increased. Whereas divination during miai arrangements seems to be more often prompted by parents than by the prospective spouse, that used during a ren'ai - type courtship appears to be more often prompted by the girlfriend/fiancée. The increased popularity of ren'ai (or shōkai) type marriages may be one reason for the increased use of divination of various sorts by those preparing for marriage. If so, it is a further application of the 'safety' principle, because miai arrangements are traditionally made by the parents and nakōdo-san, who try to assess the match relatively objectively and their opinions in favour of the marriage give some ground for confidence on the part of the young bride, the decision being largely taken out of her hands even though she still has the right of veto. In ren'ai and shōkai types of courtship,

however, she has a much greater responsibility in the decision-making process and often has less outside guidance available than in miai marriages. Since her decision will be one of the most important ones of her life, with far-reaching unknown consequences, she is more likely to seek some security in supernatural guidance through divination. Essentially the same motivations are at work as for those parents who use seimeihandan in choosing their children's names, that of seeking 'safety' or security throogh fortune-telling when there are relatively few other criteria available for a decision which involves many unknown risks and responsibilities. In such decisions human guidance is relatively blind and superhuman guidance is sought because the gods may be able to see further into the future than man. Although the gods of 'fate' are not consulted for blood group divination, it still performs the same role in giving some basis for decision-making.

Mikuji drawing

By far the most common kind of divination in Japan is that known as mikuji, with 88.9% of the Ueno sample having used this kind of fortune-telling at some time in their lives(110). A slightly higher proportion of women had done so than men (92.9% versus 86.5%). Between 86% and 88% of Shintoists, Buddhists and of the 'non-religious' majority had done so, the proportion dropping to 68.4% among the Christians. These high percentages as compared to other kinds of divination are probably attibutable partly to the lesser expense involved (50 to 100 yen for mikujis versus 2,000 to 3,000 yen for a palmist), partly to the relatively ubiquitous selling of mikuji horoscopes at Shinto shrines versus the more restricted availability of other kinds of diviners, and partly to the longer established nature of mikujis as compared with blood group

(110) Morioka (1981) found that 76% of his nationwide survey had consulted mikuji horoscopes, a lower percentage than the Ueno sample but still a very high overall proportion of the population.

divination or astrology[111]. Nevertheless, an increase in the popularity of mikuji horoscopes is also discerible among the younger generations, as for other kinds of divination, the percentage of respondents who had consulted a mikuji dropping steadily from 100% in the 20 -24 age group to 53.8% in the over sixties, apart from a slight rise in the 55 - 59 age group[112]. Again this is mainly on account of consultation before marriage, as reported also by Morioka (1981). Of the 59 out of 70 people in Ueno interviewed about the practice[113], 13 of the 38 women and 4 of the 21 men specified that they had done so only 'before marriage', either in their later teens or early twenties. One of the men had done it only because his girlfriend (who is now his wife) wished to, while the motives of almost all the others who had consulted mikuji horoscopes at that time were to discover what kind of a partner they might find, whether the marriage would be happy, or to see if the horoscope would confirm an existing relationship as likely to be the 'right' one.

The mechanics of mikuji consultation vary from shrine to shrine, but it always involves some kind of random selection of a printed horoscope. Sometimes it is by taking from a box one of many identically wrapped horoscopes; at other times it is by drawing a numbered stick from a cylinder and then purchasing the horoscope of that number from a nearby shop in the shrine. Whatever the method, the mikuji contains printed oracles referring to a variety of aspects of life such as health, marriage proposal (endan), financial matters or friendships.

---

(111) The author has not been able to discover yet when astrology was introduced to Japan, but it is likely that the astrology of the Chinese annual zodiac predated the introduction of the kind of astrology found also in the West but which has its roots in the Middle East.

(112) This correlation by age is highly significant, a significance level of less than 0.005, meaning the likelihood against it being due to chance is greater than 1 in 200.

(113) Only the 70 people interviewed in the first period of fieldwork were asked about mikuji consultations, their answers tending to be so standardised that the question was not asked of the 30 interviewed in the second fieldwork period.

A young couple drawing their mikujis together on New Year's Day.

Palmistry booths specially set up for Adults' Day on the restaurant floor of a prestigious department store in Ueno City.

Some examples include:

(Re. Health)	'Do as your doctor advises',
	'No illness is to be expected',
	'Have a check-up',
(Re. Work)	'Respect the opinions of your seniors (senpai) and friends'
	'Go in the way you have been thinking about already',
(Re. Marriage proposal)	'Hard at first, all right afterwards',
	'Look towards the east' (i.e. for a spouse).

At the top of each mikuji horoscope the overall fortune of the oracle is announced in terms of 'very good luck' (daikichi), 'good luck' (kichi) or 'bad luck' (kyō). The possibility of 'bad luck' being predicted caused four women all aged over 40, to cease drawing mikujis at all when they began to draw some containing unspecified 'frightening things'. A fifth woman, aged 58, had never drawn one at all because she did not want to repeat her mother's experience in which some (unspecified) disaster had befallen the household as predicted in the mikuji. Such women avoid the oracles out of fear and in these cases non-practice seems to be more consistent with 'belief' than the normal case of practice, predisposing towards belief (cf. Southwold 1983). They did not seem to think that the drawing of the mikuji caused the ill luck, or that the luck would not occur if they did not know about it, but instead they preferred to let it come anyway without being forewarned. Their behaviour appears to be inconsistent with the 'safety' principle described by Benedict (1946: 26-8) according to which 'forewarned is forearmed', a principle which seems to permeate many aspects of Japanese fortune-telling. However, even these exceptions may still be interpreted as a response to a more generalised safety principle by which 'forewarned is forearmed' if one thinks one can do something to avert the disaster (as seems tohave been the implication of the wartime propaganda cited by Benedict), but if one is unable to forearm then the forewarning brings nothing but pessimism or despair. If some disaster is seen as inevitable or 'fated', then 'forewarning is foreboding' and a common psychological response is to close one's mind to that which is forewarned. This 'ostrich policy' brings some degree of temporary reduction of anxiety (fuan) but does not bring real'safety', only an imagined one, if the forewarning is

accurate. There are two possible courses of action to take in response to a warning which is believed: either to act upon it or to ignore it, but to ignore it is in practice equivalent to not believing the warning. It is likely that the same 'ostrich policy' lies behind the thinking of some of those who deny the belief in an afterlife (cf. chapter 3): the fact of death is inevitable but if one is unable or unwilling to prepare oneself for whatever might come afterwards then some aspect of apparent 'security', which is nothing more than a reduction of anxiety by refusing to consider the matter, might be gained by an 'ostrich policy'.

Another reaction to mikujis, reported by 6 women and 2 men, amounts to virtually the same as the 'ostrich policy' except that it allows the people to continue drawing mikujis. Their attitude is that they refuse to believe any of the bad things written but they are glad when anything good is predicted. Such an attitude is consistent with the comments of one informant, that 'Japan's kami are gods of convenience' (tsugō ga ii kami), called on when one needs them but ignored otherwise, and the same may be said of attitudes to doctrines and practices such as mikuji drawing in which some people choose to believe that which they find convenient but to ignore that which is inconvenient or makes too many demands on them.

A third reaction, reported by five men and four women, is to worry when something bad is predicted, thinking that little or nothing can be done to avert it. All these three types of reactions assume that their fate is relatively immutable, but some of those with these reactions, and many others, do pray at the shrine for the god to avert the evil predicted or to bring to pass the good things foretold. Such prayers view the mikuji horoscopes as warnings or promises conditional upon human responses, by prayer for superhuman intervention, rather than as immutable destinies. Some people then tie up the 'bad' mikuji horoscopes on the branches of trees or bushes in the shrine, or on strings provided

for the purpose, praying for the evil to be left at the shrine and not brought home. They might keep the good oracles in a handbag or somewhere at home. Others tie the 'good' or 'very good' horoscopes to the branches or strings with a prayer that the promises on them would be fulfilled, so that the act of tying a mikuji to a tree can have a variety of meanings according to the type of mikuji.

Two informants, both women, say their main reason for consulting mikujis is anxiety (fuan) about any particular problem, while the majority disguise any anxiety (about marriage, health etc.) which they might feel under the cover of 'curiosity' or 'fun', an attitude reported by 20 men and 15 women. Their attitude is very similar to the 2 men and 3 women who do it 'just as part of the New Year events', since New Year is the most common time for married people to consult mikujis. Mothers visiting shrines at other times with their children do it 'as a kind of play (asobi)' for the children: 16 men and 15 women informants had first pulled a mikuji in childhood. Many had done so as adolescents or prior to marriage but relatively few continued to do so subsequently, usually at the New Year. Table 6.6 summarises these frequencies, as reported by married adult informants:

Table 6.6: Estimates by informants of how many times they had ever pulled a mikuji

	Men	Women
Once only	1	5
2 - 5 times	13	10
6 - 10 times	5	2
More than 10 times	4	9
"Often"	3	5

Usually marriage is seen by informants as a time when they ceased to consult mikujis, often because their main questions had been answered, but for a few cessation came after they had joined the Sōka Gakkai or became involved with Christianity.

Despite the high frequency of consultation by some people - before marriage, those interviewed after marriage often denied that the mikujis had any predictive power at all. Thirty of the 59 informants (11 men, 19 women) gave such denials, sometimes for reasons such as 'they are all printed, so can not be too specific for any individual', four said that the oracles are so vague that by statisical probability some items would come true, and six considered any accurate prediction to be simply a result of one's own interpretation of subsequent events. Nevertheless, some of these sceptics had consulted mikuji horoscopes several times in earlier life. It seems that after marriage the need for consulting had often disappeared, and as practice ceased so 'belief' declined, perhaps accentuated by contradictory experiences similar to those mentioned above (footnote 101) with regard to aishō divination.

The others were prepared to say they 'half believed' or to imply some belief by their ceasing consultation out of fear of bad events being predicted, but only three individuals interviewed could cite specific examples of any prediction which they considered had come true. Interestingly, two of these are male musicians in the Kyoto Philharmonic orchestra(114), one of whom said the mikuji was accurate in predicting he would have good friends, and the other said the predictions 'sometimes' came true when he lost something. The third person gave a small list of fulfilled predictions concerning losing a purse and a valuable pendant, where her husband would come from, friends visiting 'from afar'(115) and having no more than 3 children: she has two, 'both with difficulty', and had to wait 11 years for the first, but it is rare to have more than 3 children in modern Japan anyway(116).

---

(114) These were also the only two who reported distinct differences in atmosphere between Shinto shrines and Buddhist temples, suggesting that their musical intuition is linked with some sort of a sensitivity to spiritual matters.

(115) She says this was around the time of her marriage and interpreted the wedding as its fulfillment.

(116) The high priest of the Ueno jingū says that the mikuji oracles come true 'only if you take them seriously, with all your heart, and not with a casual attitude'.

There is therefore a gradient in professed 'belief' in the predictive value of mikuji oracles, ranging from a majority who deny any belief but at some time have consulted mikujis, and often see it it in terms of 'curiosity' or 'fun', through to a minority who report specific instances of fulfilled predictions or who have ceased consultations out of a fear of evil omens. The latter reaction, however, and that of several others, is an 'ostrich policy' which embodies a complementary reverse side to the 'safety principle' found in most forms of Japanese divination. The consistent thread in most divination whch links it with those preparing for marriage is again found in mikuji consultations. This thread is the 'safety principle' by which safety and security in life is sought by most women through marriage to a reliable husband, but as ren'ai type marriages become more popular the outside authority for their decisions is more commonly sought in fortune-telling.

Kokkuri-san

The final kind of divination before marriage is the Japanese equivalent of Ouija boards(117), by which a tripod of chopsticks or, more commonly, a 5-yen (or other) coin is used for divination inside a circle consisting of the 52 hiragana syllabic symbols. Out of the 578 people who answered the question, 23 (4%) admitted to having consulted Kokkuri-san, but one lady who left the question conspicuously blank admitted to having done so when interviewed. The 14 women and 9 men who admitted to it in the questionnaire accounted for 6.4% of the female respondents versus 2.5% of the men, a finding consistent with the general female interest in divination already noted. Again, there is a clear concentration in the younger age-groups: 6 of the respondents were aged 20 - 24, accounting for 40% of the 15 respondents in this age group, 5 were aged 25 - 29 (10% of this age group) and

(117) According to the Dictionary of Japanese Folklore (Nihon Minzoku Jiten (1971: 259) the practice of consulting 'Kokkuri-san' was introduced by sailors from America and became popular in the Meiji and Taishō periods.

a further 5 were aged 30 - 34 (4.1% of this group). This accords with the replies of those interviewed about it, all of whom had consulted Kokkuri-san while at school or university.

The seven people interviewed about consulting Kokkuri-san gave accounts which fall into three principal categories:

a) To discover if a boy or girl was interested in them,

b) To find missing property,

c) As an activity in which their friends were involved and to avoid any feelings of not participating in the group.

Two informants, a girl and a boy, both in their early twenties, reported the first type of consultation of Kokkuri-san(118). Both had done so at middle school, the boy as a brief 'pastime' with his friends just once, but the girl on several occasions with a group of 4 or 5 friends before she became frightened, fearing that a curse (tatari) or supernatural punishment would befall her. She says their purpose was to find out if any of the boys were interested in them, or if any of those they were interested in had another girlfriend. This early kind of divination falls into the same overall pattern as that of the other forms of fortune-telling prior to marriage, except that Kokkuri-san is consulted at an earlier age when the questions are more concerned with adolescent romance than with serious marriage prospects. It may be significant that it is a 5-yen coin which is used, 5 yen (go-en) being a homonym for 'honourable relationship/karma' - i.e. marriage - and this girl has kept the 5-yen coin in her room for the subsequent 10 years without spending it or throwing it away.

Kokkuri-san is consulted about finding a boyfriend (or girlfriend) and also to try to find lost property. A group of girls in middle school wanted to discover the identity of a thief

(118) They had done so on different occasions and at different schools.

who had stolen a kimono belonging to the informant's mother[119]. 'Kokkuri-san' named a girl in the neighbourhood, but the informant did not believe it could have been her. They never found out who the culprit really was, but it was suspected that the kimono was taken out of spite because the informant's mother had become one of the first Christians in that village.

Three others did not specify the purpose for which Kokkuri-san had been consulted, but joined a group of their friends for it. One lady, now in her late thirties, in her childhood had joined a group of neighbours 'playing' at okkuri-san in a street in Kyoto one summer's evening; another lady, now aged 46, had done it at the age of 12 with a group of 4 - 6 friends, about 2 or 3 times in all, and a third woman, now in her late twenties, had done it only once, at the age of 9. She had found it very frightening when the chopsticks moved and almost immediately she took her hand away because she had heard reports about the fox god (Inari) possessing people and making them mentally unbalanced through their consultation of Kokkuri-san. All these cases involved children or young adults, who may have had earlier contact with this kind of divination through friends or older siblings or else in middle school may use Kokkuri-san as a means of divination to find property or for information about possible boyfriends or girlfriends. Interest in it tends to recede later in life, but the consultation of Kokkuri-san in middle school is perhaps a preliminary to the consultation of other kinds of divination as romances become more serious and might lead on to marriage. It is in these later forms of fortune-telling that the concern with 'safety' becomes conspicuous.

---

(119) The informant is now aged 44, so is recounting an incident which took place about 30 years previously.

New Year decorations for sale in Nishiyama.

New Year rice-cakes and satsuma in a <u>tokonoma</u>.

New Year decorations outside an Aoyama house, showing a chimaki in a sheath on the left of the door plus New Year pine branches on the post holding the Japanese flag.

New Year decoration attached to a car's radiator, an attached label bearing the words 'traffic safety' indicating that this decoration is seen as equivalent to a mamori safety charm.

Safety charms

The theme of safety is manifested in the possession of safety charms (mamori) by many of the population. Such charms are possessed by 431 out of the 667 questionnaire respondents - 64.6% of the sample. Many have more than one and exchange the charms for new ones every year at New Year. Others have reflector plates or stickers as mamoris on the rear of their cars, bearing the name of the shrine from which it was bought; some also pay for their cars to have a ritual purification (o-harai) performed over them by a Shinto priest either when the car is bought or every year at a regular time, usually a little after New Year. The commonest type of mamori is a plastic or wooden pendant attached to the inside of the front windscreen: most drivers have just one but some have several, despite the idea, expressed half as a joke, that one ought not to have more than one mamori in a car in case the gods quarrel among themselves. Such ideas indicate that the god is thought to be present in the charm in some form, or else that the charm is a symbol of the god's protection.

Similar mamori charms are often attached to the satchels of schoolchildren, kept on children's desks, or kept in the briefcases or driving licenses of adults. The virtual ubiquity raises the question of why people keep them, and the almost unanimous reply is along the lines ofthe charms giving 'peace of mind', 'reassurance' or a 'sense of security', using the same words (anshin, anshinkan etc.) as those used in many other contexts to express the motivation of 'safety'. Some said they thought the charm reminded them to drive carefully, so had an effect in that way, while others saw the charm as giving a psychological feeling of confidence while driving, one woman stroking it with her hand after any incident involving a narrow-miss with another vehicle. None could supply specific instances of their safety being directly attributable to the charm, but many considered they might be more liable to have an accident if they did not have a mamori charm, so they kept it to be 'on the safe side'. Often they had received it as a gift from a parent or spouse so were reluctant to part with it on

account of its nostalgic value. On the other hand, one man attributed an accident to his actually having a mamori charm: he is now a member of the Sōka Gakkai and while he was under pressure from relatives to join the organisation he bought the mamori from a Shinto shrine, a practice condemned by the Sōka Gakkai, who see Shinto as a 'false religion'. On his way home he had gone no more than 10 kilometres when his car overturned and crashed. He escaped unharmed, but the first thing he did was to throw away the mamori and soon after that he joined the Sōka Gakkai(120).

Such an experience may be unusual, but it is interesting that within half an hour after a car went into a ditch in Aoyama its large mamori had been removed, shortly before the pick-up truck arrived to tow the car away because of its broken axle. On roads which are often narrow and have many blind corners (with mirrors now placed there) as well as steep ditches at the sides, some special concern with safety is to be expected, but the prevalence of these charms seems so much more than would be expected from road conditions alone, and seems to reflect a more widespread concern with safety.

Similarly, on houses the chimaki charms thrown from the floats during the Ueno matsuri (festival) are used as protection charms for the building. Some say the luck comes only if one catches the chimaki oneself, but others who have bought or been given one still put it up and say it brings them some kind of feeling of 'security'. The putting up of special decorations or emblems above or beside the front door of the house at New Year and Setsubun is also considered by some informants to serve the same purpose as safety charms. At New Year the decorations consist of straw tied in various shapes as tassels or 'horns', leaves, sometimes Shinto paper streamers,

---

(120) It is possible that his tale has been embellished somewhat to suit Sōka Gakkai's propaganda purposes.

and almost invariably a satsuma orange (See photographs). These are placed normally over the front door. Often pine branches (kadomatsu) or a more formal decoration consisting of a cluster of bamboo trunks and leaves are placed at the side of the entrance-way, the pine branches usually tied to the doorpost or gate. At Setsubun the head or skeleton of a sardine is placed in the genkan or next to the doorpost outside the house, although the custom seems to be limited to the Kansai region and not to be diffused over Japan like the New Year decoration custom.

A small sample of 20 people was asked about what these symbols meant to them. Approximately one third gave answers couched in terms of 'custom'(121), one third said they 'Don't know' or had never thought about the matter, but the remaining third, sometimes after a little reflection, gave answers which saw these emblems as similar to safety charms. These people referred to the decorations as "a kind of mamori", "a yakuyoke"(122), "a symbol of the god" or "something to keep the Devil out". All these had put up a New Year decoration in their homes but only a few had put up the Setsubun sardine. However, those who put up the sardine tended to be among those who saw the emblems as similar to mamoris. These 'unofficial' interpretations which regard the decorations as forms of safety charms indicate the meaning of the emblems at the 'folk' or 'practical' level, irrespective of 'official' interpretations by anthropologists or folklore specialists. One such 'official' interpretation is that given by Picken (1980: 33) who sees the decorations as symbolic of prosperity (or fertility in their presumed original context) but only one Ueno informant, after some thought, offered such an interpretation(123). Whatever the postulated 'origins' of the

---

(121) Included in this general categorisation are replies such as "they are markers to distinguish one year from the next" (using the word kejime, distinction) and "the meaning differs from one area to another around the country, but I don't know really what the meaning is."

(122) Yakuyoke is another term for a protective charm, like mamori.

(123) He said the emblems are symbols of an abundant harvest (hōsaku).

custom - and such 'origins' can never be proven decisively - the meaning of the emblems to a significant proportion of the contemporary Japanese population is that of safety charms.

Some further evidence for a correlation betwen these types of charms comes from the fact that they tend to be put up by those households who possess a Kamidana or mamori. The association betwenn these charms can be seen in Table 6.7, in which Aoyama households are classified according to their possession of New Year dedorations or chimakis: the same could not be done for Sakurano because the metal doors of the apartments did not allow such decorations to be fixed to the outside, besides which many more Sakurano than Aoyama residents go away to the houses of relatives at New Year, the latter tending to receive some influx of visitors at that time instead.

Table 6.7: Correlation between New Year decorations, chimakis, Kamidanas and mamori charms.

Households	With both New Year decorations and chimakis	With chimakis but no New Year decorations	With New Year decorations only	With neither chimakis nor New Year decorations
% with Kamidanas	65.2%	42.8%	38.1%	15.6%
% with at least one spouse possessing a mamori	82.5%	71.4%	73.2%	55.9%
% with both spouses possessing a mamori	69.5%	42.8%	40.2%	28.6%
% with Butsudans	30.4%	28.5%	33.0%	33.8%
% with neither spouse having a mamori	4.3%	7.1%	13.4%	22.0%

Table 6.7 shows that those households which put up both New Year decorations and chimakis are far more likely to have a Kamidana and/or a mamori too, as compared with those households

where neither New Year decorations nor chimakis are put up. All these are specifically associated with Shinto and are often concerned with safety, the standard prayer at a Kamidana being 'to pass each day safely'. Conversely, the proportion of households with a Butsudan does not appear to be significantly affected at all by whether or not New Year decorations or chimakis are put up by that household. It is only the Shinto features connected with safety which have an association of some sort one with another, households with one of these tending to acquire others too. However, of the whole sample of 211 households, only 16 had no Kamidana, mamoris, New Year decorations or chimakis: 3 of these 16 families contained at least one member who is a Christian, 2 are Sōka Gakkai families and 2 are publicly known to support the Communist party, which may indicate some atheistic values but even among these there are other 'religious' practices reported such as interests in astrology. The other apparently 'non-religious' households may not be as 'non-religious' in other years, however, as indicated by the statement by one of these housewives that she had not put up a New Year decoration that year because she had not had any guests, but that in other years she does(124). These observations indicate that very few households are devoid of 'religious' practices altogether, and many of this minority subscribe to some alternative ideology instead, rather than being 'non-religious'. They find their security in another god or another social group but the need for security still motivates them, even if in different channels to those around them. Some search for security is universal, but it can take either religious or non-religious forms and in Japan can be seen to motivate many kinds of behaviours in both spheres of activity.

---

(124) At New Year in 1984 they has a very elaborate decoration over their door and others on the radiators of both their cars, but that year they had guests to stay.

PRACTICAL RELIGION IN JAPAN :

A Study of two urban neighbourhoods

Volume II

David C. Lewis

A thesis submitted to the University of Manchester for the degree of Doctor of Philosophy in the Faculty of Economic and Social Studies, Department of Social Anthropology.

1984

PART III

TRANSFORMATIONS

Part III Transformations

Having indicated four basic motivations in Japanese religiosity (which also emerge in non-religious spheres), and indicated by a number of examples the more obvious or conventional forms which these can take, it is necessary to indicate now some of the circumstances in which more specifically 'religious' manifestations of these motivations can occur. These circumstances act as catalysts to produce a religious effect, or, reverting to the analogy in chapter 1, they are 'triggers' which initiate an enzyme chain which in turn produces a particular end result. However, there are also inhibitors which cancel or nullify enzyme production in the body, or else localize the enzyme action, directly or indirectly, so that, for example, melanin is only produced in those areas in direct contact with the sun's rays (acting as trigger mechanisms) among Caucasian - type peoples, and its production is inhibited (or not triggered off) in other parts of the body. In the same way certain environmental processes can trigger off religious responses but other factors may localise or inhibit these responses in other parts of the social body. These complexities are particularly relevant to the chapters on birth order and sex, where the differences are largely statistical, than to the chapters on house-building and leisure, where attitudes and behaviour are more widespread among the sample. The chapter on illness is rather more complicated, in so far as the number of cases is too small to make statistical analyses and the illnesses themselves are differentiated: therefore, just as certain frequencies of solar light stimulate melanin production but others enable vision, so certain types of illnesses can produce 'religious' responses and others 'non-religious'. The

analogy presupposes the existence of certain faculties in man such as the absence of albinism or blindness (or similar deficiences such as colour blindness), so in the same way it is not inevitable that all individuals should respond in the same way to the same stimuli. Rather, a combination of suitable conditions can produce similar reactions in a variety of people, and the occurrence of a sufficient number of similar reactions among a large enough sample gives confidence that these are not isolated, chance occurrences but that they fall into a general pattern.

This does present a serious problem in the following data, in so far as the patterns do not always occur with sufficient frequency in such a relatively small sample as to be statistically noticeable (1). It may be that further research will either validate or disprove the hypotheses advanced in the following short chapters, but this preliminary data nevertheless appears to be internally consistent and plausible, and to point in directions which may open up useful avenues for further research.

---

(1) See the note on statistics in the Introduction.

CHAPTER 7

BIRTH ORDER

In chapters 2 and 3 some of the privileges and responsibilities of eldest sons (chōnan) in Japan have been outlined already. To summarise them again briefly, they are:

1) Privilege - traditionally to inherit the parental house, land or other property, which also applies in many cases still today, or, perhaps more commonly now, to receive parental resources to enter higher education and become a 'salaryman'.

2) Responsibility - to care for the aging parents when they are alive and to continue to remember them by performing the ancestral cult when they are dead.

From childhood the eldest son has been conscious of these privileges and responsibilities to at least some extent. The chōnan has become accustomed to receiving special respect or privileges in comparison to any younger siblings: younger brothers are taught to use the honourific form "o-niisan" (or, more familiarly "niichan") to their elder brother whereas they themselves are called by their personal names (1).

---

(1) Elder sisters are called o-nēsan or, familiarly, nēchan, and these terms are used by all younger siblings, irrespective of sex, to their eldest brother and sister.

In more traditional families, of which some in Ueno remain[2], the men, from the eldest down to the youngest son, take their baths in the evenings before the women, again from eldest to youngest. Food is similarly served in accordance with rank ordering by birth order among the children who again are differentiated by sex. Conversely, the chōnan (and oldest daughter, chōjō, commonly among the sisters) is expected to take responsibility for looking after the younger siblings to a certain extent in some households, depending on age. Although strict adherence to traditional bathing and food serving arrangements is rare among families such as those in Aoyama and especially Sakurano, the differences in terms of address and role expectations remain strong. This is true even of twins, as shown by Ikeda's study of parental attitudes to twins and role expectations: twins designated as 'elder' by the parents showed more difficulty in parting from their mothers and participating in group activities, but when the pair were left alone in free play the elder ordered the younger around and took the leadership (Ideda 1974: 318).

---

(2) Although these are normally traditional families in the older sections of Ueno, one Aoyama man is a younger brother in such a family and his wife is expected to help out in the family's old established shop when they need help, even though her husband is a salaryman with a large company. As the inmarried wife (yome-san) of the younger brother she is last to take a bath in the evenings if she has to stay overnight with her in-laws, while her 1½ year old son is the last among the men, being bathed by his father before the women have their baths.

Traditionally, the eldest son had his destiny in life already well mapped out for him from birth: he would inherit the family farm and look after his parents and, subsequently, the ancestral cult while his sisters married and his younger brothers either set up branch houses on a very small portion of the ancestral land, married as a yōshi into a family with no sons, or migrated to the city (T.C.Smith 1959:46; Fukutake 1967:41-3,54-5; Nakane 1967:8-11). As shown in chapter 3, even though the inheritance laws have changed many of these principles remain the same today: chōnans still often inherit a large part of the family property, are given more opportunities for social advancement and still normally take over the ancestral cult. In religious terms, their spiritual lives are relatively pre-determined into conventional, orthodox patterns of ancestor worship, just as their material lives are still to some extent pre-determined by their parents. In this context, it should be remembered that many chōnans living in the Nissei shataku do not need to save up for a house because they expect to inherit one sooner or later, whereas most younger sons need to take out a mortgage: despite the security of being employed by Nissei, there is less material security in terms of home ownership than among many chōnans. This is particularly the case as land prices continue to rise and building land becomes increasingly scarce, or further and further away from the main metropolitan centres.

The 'map of the future' or future expectations is therefore clearer for most chōnans than for younger sons. This is true both materially and spiritually, the former as a common consequence of the chōnans' privileges and the latter as a concomitant of their responsibilities. In general, the chōnans are more secure materially than their younger brothers and are also more established in well-defined sets of duties

and obligations towards the ancestors. Their responsibilities to the ancestors are clearly laid out in social and family traditions, and for this reason their religious activities and views are likely to be more 'conservative' than those of their younger brothers. In religious matters, the eldest sons are more often pillars of orthodoxy and conservatism in so far as they conform to established religious traditions. This difference by birth order may even have an influence on personality development, as noted for the village of Niike by Beardsley, Hall and Ward:

'The eldest son, unless he is a fool or wastrel, has the best chance for an assured but preplanned life. As heir apparent, he is gratified and protected with fewer denials than his younger brothers face. When mature, he is perhaps more accustomed to being served and obeyed; but he may also be more pompous, duller and stodgier than his younger siblings, who win their place through personality and initiative rather than through inherited position.'

(Beardsley, Hall and Ward 1959: 298).

Younger sons, however, have no well-defined 'map of the future' laid out for them by parental expectations, attitudes and encouragement to live up to these expectations. Although they may now inherit more of the family property, this is often insufficient to buy a home of their own. Because the very presence of a second or subsequent son normally entails the dividing of family property with the chōnan, neither can expect to buy a house from inherited property alone. In contrast to this, those chōnans who are only sons or have married sisters frequently do expect to inherit exclusive rights to their parental homes. Demographic trends towards smaller families mean an increasing number of chōnan of the latter type and fewer of the former, although in theory the number of the former should approximately equal the number of

younger sons [3]. This theoretical aggregate is of course in Japan as a whole while migration, work patterns, educational opportunities, access to large companies, age of the sampled individuals and other factors may affect the distribution of elder and younger sons in any particular area.

On a spiritual level, younger sons may continue to practise grave rites but are less likely to assume responsibility for Butsudan rites than are their elder brothers. In some cases, they may inherit the family Kamidana instead, or else may buy one at marriage or when they buy their own house [4]. Those with their own homes may also decide to set up a 'substitute Butsudan' at which they perform some form of memorial rites, as described in chapter 3. However, for the majority of younger sons there are no formal, prescribed forms of religious expression laid down in culturally normative sets of rules, obligations or expectations even if certain households may have private traditions or hopes not shared by society at large.

In such a situation two possibilities present themselves: either to remain 'non-religious' or to find substitute spiritually-oriented philosophies of life. To some extent the purchase of Kamidanas or setting up of 'substitute Butsudans' could be seen as expressions of the latter alternative among younger sons who have bought their own homes. The former hypothesis is difficult to validate because of the ambiguities of the term 'non-religious' in a Japanese context and the disparities between official religious identification and actual practice. Simply from the

---

(3) Eldest sons who have died in infancy or childhood are exceptions, especially if their younger siblings continue to call themselves younger sons rather than chōnans, as in the case of the Matsui and Fujii families (cf. chapter 3).

(4) To some extent, the very fact of being able to purchase one's own home may evoke a feeling of gratitude to the gods and a desire to express this through buying a Kamidana.

point of view of religious identification there is no significant difference between the percentages of chōnans and of younger sons who profess to have a religion or none at all:

Table 7.1 Professed Religious Identification by Birth Order (Males only, Aoyama and Sakurano combined)

	Shintoists	Buddhists	Christians	'Other religions'	No Religion
Chōnans	7 = 4.0%	23 = 13.3%	5 = 2.9%	1 = 0.6%	137 = 79.2%
Younger sons	6 = 3.8%	28 = 17.5%	6 = 3.8%	3 = 1.9%	117 = 73.1%

Though the percentage difference among these 173 Chōnans and 160 others is statistically negligible, the indication, if anything, is for more younger sons to claim a religious identification of some sort, including the non-orthodox or non-conventional religions of Christianity and some of the 'new religions' as well as Buddhism, (which in itself is a loose mixture of traditional Buddhists and of adherents of 'new religions' such as the Sōka Gakkai).

Surveys such as that by Basabe (1968: 127) have shown a widespread attitude in Japan which holds that 'religion' is something worthy of study in life no matter how busy a man is, that 'it is better that religion always exist in the world' and that it can instil deep peace into man's heart (5). In the light of such attitudes, it is reasonable to expect that there will be some 'substitution effect' in religiosity

---

(5) For all 3 of these items at least 50% of Basabe's sample agreed with the statements, the overall percentages being 53.4%, 58.4% and 50.4% respectively. Even among the 22% whom Basabe categories as a 'negative' group, 17.7% agreed with the first and 16.6% with the third items, though none agreed with the second. Overall those who disagreed were only 13.9%, 6.1% and 8.1% respectively, the remainder replying "Don't know".

whereby a general openness to religious expressions, actions or beliefs is more likely to manifest itself in some form of 'religious' phenomena than in none. If there is a 'spiritual vacuum ' in the lives of many of these younger sons, that vacuum is more likely to be filled by something than to remain completely empty. This is confirmed by a tendency noted among the shataku residents in response to some questions on their general beliefs. Their responses are summarised in table 7.4:

Table 7.2: Responses of shataku men to the question: 'Do you think any of the following affect your character/personality?'

	Eldest sons	Younger sons
a) One's name	2 = 2.1%	9 = 12.2%
b) The position of the stars at birth	5 = 5.2%	9 = 12.2%
c) Fate	24 = 25.0%	25 = 32.4%
d) The lines of one's palm	6 = 6.25%	9 = 12.2%
e) Heredity	63 = 65.6%	59 = 77.0%
f) Environment	86 = 89.6%	69 = 90.5%

For Nissei shataku: number of eldest sons = 96; number of younger sons = 76.

The clear tendency in these figures is for a greater proportion of younger sons to affirm a belief in the influence of forces connected with divination such as one's name, the position of the stars at birth or Fate (Unmei).

'Heredity' and 'environment' were included as relatively more 'scientific' items, although in retrospect the 'environment' item may have been too vague or all-inclusive a term so that only a few could actually disagree with the proposition. Nevertheless, the percentages of "Yes" respondents are virtually identical, although more younger sons also opted for a 'Yes' answer to the heredity item than did chōnans. However, the proportionate difference in percentages between 77% and 65.6%

is considerably less than that between 12.2% and 2.1%, 5.2% or 6.25%. Tests for statistical significance are complicated by the fact that these figures reflect overlapping categories of respondents in so far as some respondents answered 'Yes' to more than one of these items (as is obvious from the 'environment' answer alone). However, a cumulative result by all those who answered 'Yes' to at least one of these fortune-telling related items still gives the same overall tendency (40% of eldest sons vs. 48% of younger sons) but the two figures thus obtained are not amenable to checking for statistical significance. Rather, the percentages argue for themselves by their consistent tendency to point in the same direction, with the younger sons constantly giving replies which indicate a greater openness to a belief in Fate etc. than chōnans have[6]. The very consistency of direction of these replies for those items connected with fortune-telling indicates that there is some kind of influence in the same direction, and that this influence is related to beliefs concerning the influence of forces connected to divination .

The correlation with fortune-telling is brought out further in a subsequent question which asked whether similar items influence the fortunes in life of respondents and their children, this time excluding heredity and environment but including other beings on a 'spiritual' plane not directly linked to fortune-telling - namely, Kamisama[7],

---

(6) Exactly the same is true of many of Basabe's findings, which are always presented in terms of percentages without checking for statistical significance in most cases. These percentages from the Nissei shataku display the same kinds of consistent trends as Basabe presents, for example, between an 'affluent' and 'indigent' group of respondents in percentage terms rather than checking for statistical significance (1968: 100).

(7) A more formal title for kami, the gods of Shinto, but Kamisama is also commonly used as a name for God by Christians, leading to a slight ambiguity in responses whereby both Shintoists and Christians are liable to answer 'Yes'.

Hotoke sama [8], Ancestors and Jizō [9]. It was on account of the inclusion of Jizō that the phrase 'and your children'[10] was included in the question, but because of this a few respondents without children left the question blank so the sample size is a little smaller (93 chōnans vs. 68 younger sons). The results are tabulated in Table 7.3:

Table 7.3: Responses of Sakurano men to the question: Do you think any of the following influence the fortunes in life of yourself and your children?

	Eldest sons:	Younger sons
a) Kamisama	12.5%	14.8%
b) Hotokesama	10.4%	10.8%
c) Ancestors	25.0%	25.6%
d) Jizō	9.4%	8.1%
e) Fate	26.0%	36.5%
f) The movement of the stars	3.1%	6.7%
g) Spirits and Ghosts	1.0%	0.0%
h) The lines on one's palm	2.0%	4.0%

(Note: Since some of those without children thought that the question did not apply to them the sample size for this question is therefore: Eldest sons = 93. Younger sons = 68.)

It will be seen from the above table that there is virtually no percentage difference between the samples regarding 'beliefs' in Kamisama [11], Hotoke sama, Ancestors and Jizo, and also a negligible difference regarding

---

(8) A term including both Buddhas and ancestors (cf. Dore 1958: 313).

(9) The Bodhisattva normally regarded as a children's deity and in whose honour the Jizō Bon is held (cf. chapter 11).

(10) In the original version of the questionnaire the phrase was 'or your children' but somehow in the checking by native Japanese speakers and typing up of the manuscript the 'or' became 'and' without my noticing the change.

(11) There is a slight difference for Kamisama which may be partly attributable to some younger sons inheriting Kamidanas or being more open to Christianity.

spirits and ghosts [12]. Again, the three items relating to fortune-telling - Fate, the movement of the stars, and the lines in one's palm[13] - all show a clear tendency for younger sons to assert a proportionately greater degree of 'professed belief' in the influence of these items. These statistics therefore indicate that younger sons are more open to the idea or possibility of influence from these forces upon their lives.

When correlated with rates of practice, the same tendency appears. Among the 96 chōnans and 76 younger sons in Sakurano, there is a similar percentage difference in the extent to which these two groups had ever consulted the principal types of 'serious' or 'semi-serious' fortune-telling, as shown in Table 7.4:

Table 7.4: Practice of fortune-telling among Sakurano males

Question: Have you ever:	Eldest sons:	Younger sons:
a) Pulled a mikuji	87.5%	86.8%
b) Consulted an Astrologer	19.8%	22.4%
c) Consulted a Palmist	19.8%	26.3%
d) Consulted a name-diviner	13.5%	17.1%

(12) Although the man who replied "Yes" to the spirits and ghosts item was not interviewed, it is likely that his reason was similar to that of a shataku lady who when interviewed said that the idea of spirits and ghosts is used to frighten children in order to make them behave, and in that way they influence children. Such a threat was heard when a child went out on a balcony of a flat belonging to another resident, and his mother chided him for going in that "dangerous" place with the threat that if he goes there "a ghost (or monster) (o-bake) will get you".

(13) In retrospect, it is regrettable that the item for 'one's name' was omitted from this question because of considerations of length.

The one item which shows no meaningful difference (and even a marginally but statistically insignificant higher rate for chōnans) is pulling a mikuji, which the vast majority of Japanese have done at some time in their lives. These are printed horoscopes sold at Shinto shrines, one of which is pulled or taken at random from a selection offered, the individual contents of which are unpredictable from the lottery - like selection. As will be discussed further in chapter 11, attitudes to these are generally that taking a mikuji is largely for "fun" or "interest" and relatively few people take them very seriously. However, the other types of fortune-telling listed are given in order of rising seriousness in the minds of most informants. When people wrote on the questionnaire that they had consulted an astrolger (or, more literally, "done astrology"), they often turned out to have meant, when interviewed, that they had sometimes read books on the topic or read their horoscopes in popular magazines. Only three women seemed to take astrology fairly seriously when interviewed, but several other informants had been seriously enough interested in the topic to have bought books on astrology when they were younger (often in their teens or early twenties) even if they no longer paid any attention to it. Many such books can be seen on the shelves of those local department stores which have a book section, books on fortune-telling of various types often occupying two or three rows of shelves, with a great variety of titles.

During the interviews it also became clear that palmistry is taken more seriously by many people than either mikujis or astrology. A typical comment is "I don't really pay any attention to mikujis and pull them just for fun or because my children like doing it; I don't consciously look out for my horoscope in any magazines but just happen to read it at the hairdressers, but I do think there's something to Palmistry and do pay more attention to what it says". The very fact that

many informants had paid 2,000 yen or more (about £6) to have their palms read[14] testifies to the seriousness with which they do it, though many still say it is "half a game" (hanbun asobi). To some extent this may be related to the fact that mikujis are printed, with many identical ones going to different people[15], astrological horoscopes which are printed in magazines[16] being slightly more specific according to the 12 signs of the zodiac but again being very general and relatively unspecific, whilst palmistry provides personal attention by a diviner whose attention and advice is directed to a particular individual case[17].

It is certain that the statistics presented in Table 7.4 regarding the incidence of seimeihandan is considerably under-estimated, because many people consult a book rather than a specialist when choosing their childrens' names (or else a grandparent chooses the name, usually by seimeihandan). In 12 out of 21 cases in which the husband alone was responsible for choosing the child's name, seimeihandan was used to find an auspicious name.

---

(14) By contrast, pulling a mikuji costs between 50 and 100 yen depending on the individual shrines.

(15) At least one lady expressed scepticism on these grounds, saying she could not believe in them simply because they are printed.

(16) No informants had consulted a professional astrologer as such, but a number had consulted a very similar type of diviner who divines by means of one's date of birth (seinen gappi). Though none of these diviners were actually interviewed it is likely that their methods are similar to those of astrologers.

(17) At least two informants had had their palms read by a computer, however, which removes the 'personal' element in the sense of another person giving the divination (rather than a printed piece of paper) but retains the 'personal' element of a particular individual's palm being read rather than a general oracle applicable to many people.

As shown in chapter 6, name-divination is often taken very seriously because of the possible consequences on the child's life (or on the parents' reputations if the child were to have an accident and the parents had chosen an inauspicious name). Therefore it can be seen from Table 7.4 that among the types of divination taken more seriously by most people, the frequency of consultation is higher for younger sons than for chōnans, and at least in the case of seimeihandan the figures might considerably under-represent the actual incidence of consultation.

These statistics are valid for Sakurano men largely because the shataku represents a relatively unusual (but increasingly common) style of life, namely that lived in small apartments. The limitations on space coupled with life-cycle stages means that there are far fewer Butsudans and Kamidanas in Sakurano than in Aoyama(18). The very presence of a Butsudan or Kamidana seems to affect or influence the propensity to believe in the influence of fortune-telling phenomena, however, though by no means as highly as their presence affects the propensity to believe in the influence of Kamisama, Hotokesama, ancestors or Jizō, etc. This influence is shown by chi-square tests of significance for correlations between Kamidana possession and the items listed in table 7.3. As explained in the introduction, significance levels less than 0.05 are regarded as statistically significant (the possibility of the result being due to chance lying at one in twenty when the significance level is 0.05), whereas levels less than 0.2 (in the criteria used by Dore 1958: 9-10) are regarded as statistically noticeable, in which the possibility of a valid correlation may be obscured by the small size of the sample. The computer could calculate statistical significance to a level of one in ten thousand chance of a result being due to chance alone, levels of

---

(18) The relative percentages are presented in table 3.5.

statistical significance greater than this being given as 0.0000 (i.e. extremely significant). Table 7.5 presents these significance levels between Kamidana possession and the items given in table 7.3.

Table 7.5: Significance levels of correlation between Kamidana possession and professed belief in the influence of other variables.

Item	Significance levels
Kamisama	0.0000
Hotokesama	0.0000
Ancestors	0.0000
Jizō	0.0000
Fate	0.1905
The movement of the stars	0.0855
Ghosts or spirits	0.1115
The lines on one's palm	0.1018

These correlations show that there is not only the high correlation which one might expect between possession of a Kamidana and professed belief in the influence of Kamisama, but also an extremely significant correlation with aspects of the ancestor cult or Buddhism (Hotokesama, ancestors and Jizō). Moreover, though the figures are not at the level of statistical significance, there is a very noticeable association between possession of a Kamidana and professed beliefs in the influence of fate, the movements of the stars, the lines on one's palm, and even ghosts or spirits. The reasons for this high correlation remain speculative, though worthy of further investigation, but the following factors may be relevant.

1) The inter-penetrability of Shinto and Buddhism and the lack of clear distinctions between hotoke and kami in the minds of most people are also applied to deities such as Jizō and the ancestors. When informants were asked in the interviews how they thought Kamisama influenced their lives, answers were normally vague and put in terms such as "By protecting us from disaster"; "It's a general influence throughout the whole of life, such as their looking after the safety of children"; "They are always watching you, whatever you do"[19]. When asked in

what ways hotokesama, the ancestors or Jizō influence them, the answers were always virtually the same, except that the hotoke (as ancestors) or the ancestors (go-senzosama) were sometimes regarded as "closer" or "nearer" than Kamisama, and the very few who distinguished between Hotoke (with a capital 'H', in Dore's sense, of Buddha(s):) and hotoke (cf. Dore 1958:313) (uncapitalised, as ancestors) or between hotokesama and go-senzosama (ancestors) also sometimes said the "ancestors are nearer to you ". However, apart from a number who specifically mentioned Jizō as caring for children, almost all informants were unable to distinguish between kami, hotoke, ancestors and Jizō, and usually said they are all the same, and certainly kamisama and hotokesama are the same.

2) Those who possess a kamidana usually perform grave rites too, if responsible for any graves and if the graves are within an accessible distance. Hence, they are often involved in some form of ancestor worship even if they do not possess a Butsudan too.

3) The noticeable correlation between Kamidana possession and professed belief in the influence of various fortune-telling related items may be connected in part with the fact that Shinto priests are often specialists in palmistry and name-divination, sometimes astrology, and mikuji horoscopes are sold at almost all Shinto shrines where there is an incumbent priest. Therefore Shinto actively promotes the consultation of fortune-telling in various forms.

Taking now the statistical significance levels when Butsudan possession and professed beliefs in these same items are correlated, the following results emerge, as shown in table 7.6:

(19) This common answer seems to be linked to some extent with the ideas that the neighbours are always watching one critically, and even the fear of eye-to-eye contact in some neurotic patients (cf. chapters 2 and 6; also Kasahara 1974).

Table 7.6 Significance levels between Butsudan possession and professed beliefs in the influence of various items.

Item	Statistical significance
Kamisama	0.0010
Hotokesama	0.0000
Ancestors	0.0026
Jizō	0.0030
Fate	0.0400
The movement of the stars	0.8457
Ghosts or spirits	0.5470
The lines on one's palm	0.3331

Again, there is a very highly significant degree of correlation with Kamisama, Hotokesama, ancestors and Jizō, though only the correlation with hotokesama reaches the extreme significance found in the Kamidana correlations. The relationship with hotoke, ancestors and Jizō are all expected consequences of the link between Butsudans and other aspects of Buddhism and ancestor worship in Japan, and the link with Kamisama follows the same pattern of lack of differentiation between kami and hotoke as was noted above. Moreover, this lack of differentiation was seen in chapter 3 to partly affect the worship at the altars themselves, with some ancestors being reverenced at Kamidana (though no cases were found of specific kami being reverenced at Butsudans).

However, when the relationship between Butsudan possession and the fortune-telling variables are considered, it is evident that there is no statistical correlation between having a Butsudan and professing any belief in the influence of the movement of the stars or the lines of one's palm. However, there is a statistically significant correlation with a professed belief in the influence of Fate, a finding which on the surface seems to go against the trends already outlined according to which younger sons (generally without Butsudans) tend to have a greater professed belief in the influence of Fate. Although this has been shown to be the case in Sakurano (cf. tables 7.2 and 7.3), even there a quarter of the chōnans also professed a belief in the influence of Fate, as compared to much

lower percentages of chōnans professing a belief in the influence of the other fortune-telling related items. The word used for Fate in this context is 'Unmei', which seems to have most of the connotations of the English word 'Fate', as an impersonal, remote and unchangeable force determining one's life, which in the English context is contrastable with an at least passively recognised concept of God as the opposite (i.e. personal, near and forgiving etc.). In the Japanese context however, the word 'unmei'- Fate - has no balancing counterpoint which is widely accepted, even passively, in the culture, but rather comes to be influenced by the more specific, Buddhist-derived concept of karma (en). It may be that this concept in a general way influences the thinking of at least some of those with a Butsudan who are 'traditional Buddhists', but in a more specific and direct way it certainly influences those who belong to the Sōka Gakkai. Of these, three people crossed out the word 'Fate' on the form and wrote in the word 'tenmei'; this word also means fate or destiny, Providence or 'Heaven's will', the ten part (meaning 'Heaven') replacing the un ('fate') character of unmei.

When processing the questionnaire data into the computer, it was decided to ignore this change of the word and to count their belief as faith in unmei, partly because the other Sōka Gakkai adherents were not consistent in changing the word and just replied 'Yes' (or sometimes 'Don't know') to the unmei item. For these reasons there is a statistically significant correlation between professed belief in the influence of 'Fate' and possession of a Butsudan, but not between the latter and other items connected with divination.

These relationships can be summarised as in the following diagrams:

Fig.7.1

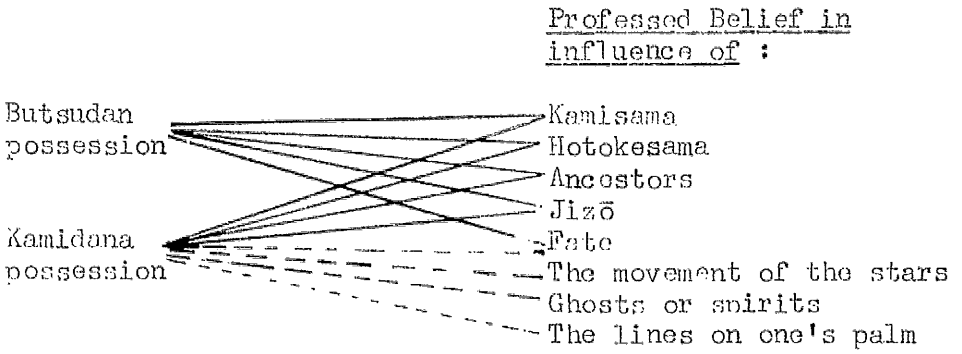

——— = Statistically significant correlation

- - - = Statistically noticeable correlation

Therefore the presence of a Kamidana or Butsudan can considerably influence professed beliefs in Fate (linked to Butsudan possession) or other influences connected with fortune-telling (linked to some extent with Kamidana possession). It is not that the physical presence of these items in the household necessarily preconditions one to profess a belief in the influence of these various items, but rather such professions of belief tend to arise through the fact that it is easier to act and speak as if one believes in such an environment than to voice dissonant opinions (cf. Southwold 1983: 48,91-2). The assumptions behind household religious practices tend to permeate speech and thought to an extent that they become 'internalised' and assume a factuality of their own (ibid, pp.48-9). In such an environment there are strong social forces acting to discourage dissonent opinions, for the sake of family harmony and easier social relationships, so that it involves more of an act of the will, and a willingness to accept the consequences thereof, to express doubts or sceptism than it does to remain quiet. Both involve decisions of the will, but the social consequences of each choice are different. In the same way, the transition from a 'passive' acceptance of traditional ideas to an 'active' advocacy of them may not be seen as involving a definite

decision-making process, but one is still involved simply through the fact that any alternatives are consciously or unconsciously rejected. Although it is far easier to act as if one believes, including expressing verbal affirmations of belief (Southwold 1983: 48,93-4), the fact that a Butsudan or Kamidana is in the household, for whatever reason, tends to create some kind of a professed 'belief'. Such beliefs (or 'attitudes' if 'belief' is too strong a word) may become sufficiently internalised in the younger generation that in future years they too may decide to purchase a Kamidana when buying a house, for example, simply because that is a part of their general consciousness or style of life, and they see no particular reason to abandon the cult. A similar process occurs with those buying a Butsudan when a parent or other close relative dies.

During the interviews four cases of the possession of 'substitute Butsudans' were discovered among households in Aoyama, but it is likely that there are several more which were never reported in the questionnaire and of which the owners were not interviewed. Two of those households appeared to be relatively 'non-religious' at first: the wife of one household denied involvement in any of the formal cult activities, denied any beliefs in an afterlife etc., and seemed quite 'materialistic' in her outlook until she admitted that she preserves the pictures of her parents before which she puts flowers 'out of memory of the departed' and said that her philosophy of life is 'very similar to Zen'. The husband of the other household is the one mentioned in footnote 71 of chapter 3 who gave his opinion of the anthropologist's research at the beginning of the fieldwork that "in an area like this you won't find many people with Butsudans or Kamidanas", implying that a search for religion there was a waste of time, and it was only 9 months later that he admitted to the existence of a small offering table in his home where his wife and children, sometimes he himself too, put offerings before the photographs of

their deceased fathers. Such data and attitudes would suggest that the presence of similar 'substitute Butsudans' or ihai elsewhere in Aoyama is highly probable. Furthermore, it is very likely (but unprovable on the basis of present data) that there will be a similarly close statistical correlation between possession of a 'substitute Butsudan' and professed belief in the influence of entities such as hotokesama, kamisama, the ancestors, Jizō and Fate.

Since the 'substitute Butsudans' were discovered only in Aoyama, (and the only comparable cult in Sakurano involved Mr. Tanaka, who keeps two ihai in his cupboard), and because Aoyama has a clearly much higher proportion of Kamidanas and Butsudans than Sakurano, all these influences produce an 'inhibitor' effect on perceiving the influence of birth order on professed beliefs in variables connected with fortune-telling in Aoyama. Perhaps a closer analogy is found in the difference between dominant and recessive alleles in genetics: the presence of a Kamidana or Butsudan tends to be 'dominant', but in the absence of these factors 'recessive' traits such as the influence of birth order become more apparent. On a statistical level, these features can still be detected in Sakurano even with the presence of some Butsudans and Kamidanas there.

The association between Butsudan possession and chōnans, and the fact that a number of chōnans also have Kamidanas in Aoyama, in fact produce such a dominant effect as to create to some extent a reversal of the Sakurano situation, with more chōnans in Aoyama professing beliefs in the influence of Fate and other variables relating to fortune-telling. In the light of the clear statistical tendencies outlined already, particularly the strong association between Butsudan ownership and professed belief in the influence of Fate (which has a much higher percentage of people affirming a belief than variables such as the movement of the stars or the lines on one's palm), it is most likely that the birth order

influence in Aoyama has been obscured by the dominant effects from possession of Butsudans, Kamidanas and an unknown number of 'substitute Butsudans'.

The relationship between these factors can be schematised as follows:

Fig 7.2

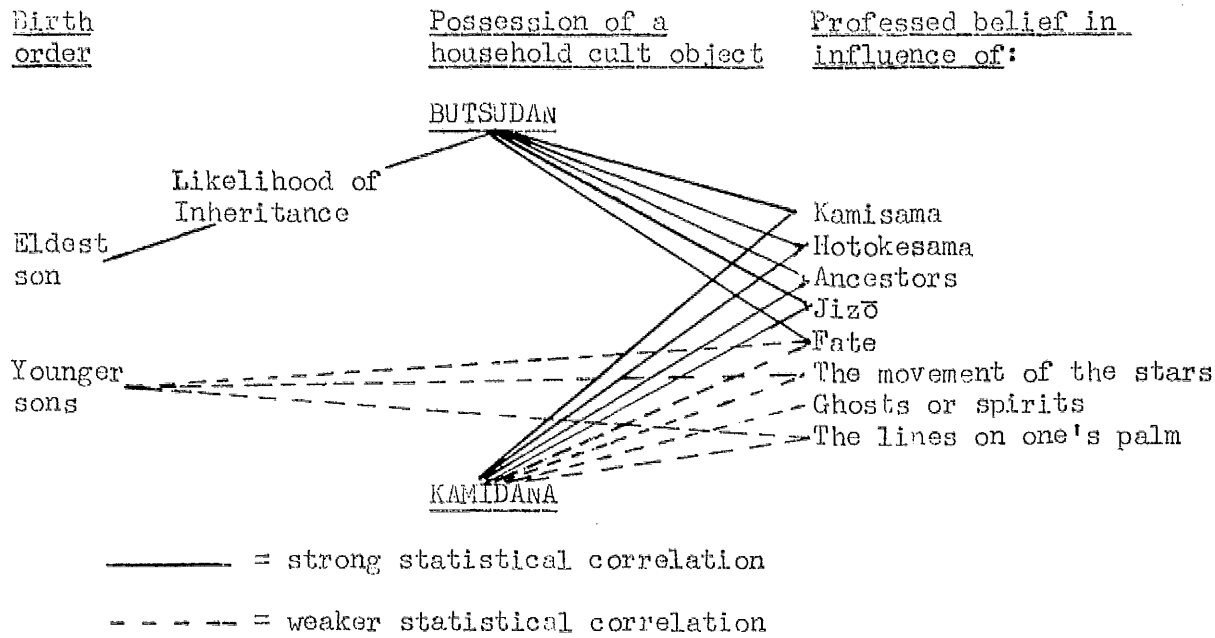

Finally, a few more remarks should be made about the concept of Fate, which alone in the above schema is linked to the three different influences of birth order, Butsudan possession and Kamidana possession. Firstly, in being a concept related to fortune-telling and favoured initially by more younger sons before they possess any Kamidana or other cult object, Fate stands in contrast to the ancestral cult on each of the three levels whereby it was earlier contrasted with Western ideas of God: 1) Fate is impersonal and abstract, the ancestors are personal and specific; 2) 'Fate' as a concept is distant from the lives of ordinary people, but the ancestors are conceived as being nearer, and, 3) Fate is generally seen as immutable to a large degree, but the ancestors may be angry or sad, or even to some extent capricious (i.f muenbotoke). However, this contrast does not invalidate the earlier comments about the

concept of God providing a 'balancing counterpoint' to ideas of Fate in Western cultures, because these ideas about the ancestors in the final analysis do not 'balance' the concepts of Fate but are sustained by it in the concept of karma. This overshadowing of the personal elements in ancestor worship by the abstract ideas of karma, linked to Fate, is produced by the close link between Butsudan possession and professed beliefs in the influence of Fate, in so far as the absence of a 'balancing counterpoint' to the concept of Fate at a higher, more absolute level allows the intermingling and fusion of ideas of Fate and karma at this higher level of which the ancestral cult forms a sub-system(20).

Secondly, the concept of Fate provides a relatively absolute and immutable 'land mark' in the psyche which to some degree approximates the presence of a mountain range or ocean in topography or travel: they are simply there and man can do nothing significant to alter their location. This sheds some interesting light on some other findings on aspects of the Japanese mind or personality, namely:

---

(20) This reference to a 'higher level' is not to be equated with the 'religion of the higher philosophers' which Leach (1968:1) talks about, but is still a component of 'practical religion' in so far as these statistical correlations are derived from a study of 'practical' religion among ordinary people. Rather, references to a 'higher' level refer to the elements of theology known by these informants and their almost synonymous use of the terms '<u>en</u>' (<u>karma</u>) and '<u>unmei</u>' (Fate) in their speech when discussing such matters with the anthropologist. Southwold's (1983: 80-83) use of theology may provide a relevant precedent in this context.

a) A pervasive element of fatalism in the Japanese 'national character' is something which is not amenable to rigorous scientific validation because it is based on subjective assessments of experience. However, this element in Japanese society has been noted by a number of social scientists studying Japanese psychology and behaviour in comparison with that of other countries. Sofue (1983: 16-18) cites and seems to agree with Yoshimori (1979:21) that Western Europeans' view of Fate is one of 'defiance to fate', whereas the Japanese view is one of 'obedience to fate'. Similarly, Connor's (1977: 9-10) list of 20 characteristics by which he stereotypes Japanese and Americans includes 'a sense of fatalism' among Japanese and 'a sense of optimism' among Americans. To a large extent these stereotypes tend to be accepted among many who have studied Japanese society, even though such broad categorisations are liable to be misleading if taken as absolute poles rather than as clusters of linked elements which can be isolated as occurring at clearly distinguishable points on a spectrum. Other aspects of the 'cluster' which appear to be linked to fatalism in Japan include a 'submissive attitude toward authority', 'passivity', 'compulsive obedience to rules and controls', 'dependency need', 'children trained to be docile, obedient and dependent' and 'deference and politeness' (ibid), all of which Connor contrasts with different American attitudes. In practice, however, all these features are not universals in Japan (as their opposites are not universals in America), but for each of them certain specific exceptional individuals could be mentioned from Aoyama (or Sakurano to some extent). However, even the exceptions need to be seen in their contexts; those who are less submissive to authority or less polite or who may worry less about their childrens' docility and obedience are in two cases the wives of prosperous self-employed businessmen whose children are not

dependent on academic success in order to find employment and whose reputation in the local community will not damage their businesses several miles away which sell their products to traders in larger cities like Kyoto. Despite such specific exceptions, the general overall pattern does appear to be consistent, and a sense of fatalism can often be detected in the passive overt attitudes of most Japanese to authority[21] and in the common use of expressions such as "shikata ga nai" or "shō ga nai" ("it can't be helped").

b) However, it appears as if in some cases 'it can be helped' in theory but not in practice. In theory the plight of the urban poor and outcastes in slum areas such as Tennōji in Osaka could be helped by the setting up of a system to distribute to these people some of the good quality clothing often thrown out and turned into recycled paper or some of the good quality furniture thrown out on the 'big rubbish days'. However, with the exception of a few Christian organisations[22] operating on a very limited

---

(21) Overt attitudes of passivity may disguise covert attitudes of rebellion, however. It is one thing to say "Yes, Yes" to an interfering neighbour and another thing to never invite her inside the house again. It is one thing to passively pay one's taxes which are deducted at source anyway and another thing to evade capital transfer taxes by not declaring money received from parents when buying a house, to hold multiple bank deposits, each below the taxable limit, in the names of each family member including young children, or to change the official residence of one's parent so that one can qualify for extra mortgage money from the Housing Finance Association on the grounds of having a 3-generational family to accommodate, when all the time the parent remains in the same actual residence in another city.

(22) It may be that other, non-Christian organisations are involved too, but I am unaware of any such bodies. Government relief payments are hard to obtain, but may be of some limited assistance. Cooper (1983: 309) also notes how it is mainly the Christian churches which have been involved in the reception and placing of Vietnamese refugees in Japan.

scale, no such projects are organised. In such specific cases fatalism - "it can't be helped" - becomes equivalent to an unwillingness to assume responsibility for new projects, a conservatism which bears many of the marks of the 'safety principle' in decision-making noted in chapter 6[23].

c) When applied to fortune-telling it appears as if the concept of Fate is not immutable but is subject to human intervention. This is so for those who pull mikujis and then pray that evil would be averted or the good would come: i.e. the mikujis are taken as warnings or promises of possibilities subject to divine intervention in response to human petitions. If this is so in theory, it is partly because the concept of gods, even if these are multifarious kami, is to some extent a counterpoint to the idea of an abstract Fate. In practice, however, most of those who pull mikujis say that their prayers are more expressions of hope than petitions expecting any tangible result[24]. For these, as for seimeihandan and to some extent palmistry and astrology, the concern is with warnings of future misfortune which might be averted by prayer, choosing an auspicious name or simply by being 'forewarned and forearmed'. When questioned about whether they think an auspicious name will guarantee a good career etc., for a child, informants say that an auspicious name is only one among many factors which need to be taken into account (such as education, heredity, the child's aptitude for study and so on), and they can not 'determine' Fate in this way; alternatively, they say that the choice of an auspicious name is not their real concern but simply the avoidance of inauspicious names. Therefore, Fate is not as malleable as might at first appear, but rather a policy of accommodating oneself to whatever limits of adjustment there may be is the path taken by most people in an effort to avoid misfortunes and, often, "to be on the safe side".

d) Another approach to this which almost amounts to the same thing is an 'ostrich policy', by which several informants say that they "only pay attention to the good things written and ignore the bad", or else cease pulling mikujis because they have become frightened by finding misfortunes predicted there. In these cases Fate may still be seen as immutable, but if this is the case then people prefer not to know, be warned about or think about possible future disaster or misfortune. It may be that this is one reason why very commonly people reply that they had "never thought about" questions concerning what happens after death, the existence of heaven or hell and so on. Those who have given any thought to these issues similarly are liable to reject the concept of a hell because it is too frightening and to say they either only believe in a heaven or in an undifferentiated afterlife(25).

(23) To some extent this phenomenon of apparent waste from the disposal of furniture and clothing in relatively good condition in contrast to the poverty elsewhere might be rationalised in terms of a reluctance to use second-hand objects (cf. Ohnuki-Tierney 1984:30), but it is also a reflection of the very low levels of giving to charity as detailed in chapter 4, footnote 7.

(24) cf. also the attitudes to prayer reported in chapter 12.

(25) This rejection of the concept of hell and belief in a heaven only is also found in the West, according to Heald (1983). During that seminar, Heald quoted one of his informants as commenting that logically if there is a heaven there must be a hell.

In at least one case the latter option was preferred because "if I believed in a heaven and hell I would worry (have fuan) about where my father is".

e) In the same way, when asked about whether or not they are afraid of death or what happens after death, only one informant (a young Roman Catholic man) replied "Yes". Two elderly women were both obviously disturbed by the question but replied "No", and several others replied that they are afraid of the death process itself as that may be painful but they are not afraid of what happens after death, sometimes explicitly rejecting any idea of a judgement. The majority simply replied "No". This may be seen as a kind of 'ostrich policy' too, but it is also a reflection of fatalism, as seen in the comments made by several about the question: "Death comes to all, so it can't be helped (shō ga nai)", or "It's inevitable, and can't be changed, so there's no point in being afraid of it".

Thirdly, the concept of Fate seems to be similar to a tendency in popular Japanese thought which considers certain factors to be immutable in society or in one's personality, and which need to be adapted to rather than changed. For example, Margaret Lock (personal communication) has called the thinking behind a Japanese culture -bound illness bōgen byō (literally 'illness originating from the mother') an example of "nineteenth century Spencerianism". By this she means that the idea of an 'innate' child-rearing ability in women which is not culturally learnt but 'natural' and can not be altered is at the root of a thinking which depicts bōgen byō children as suffering from 'unnatural' mothering[26]. This child-rearing

(26) See Lock (1983: 25-27) for a fuller explanation of the concept and aetiology of bōgen byō.

ability is immutable, like Fate, and the most one can do is to adapt oneself to these unchangeable, 'natural' methods because to go against these is to cause illness in the child[27].

Related to these ideas are other aspects of divination which view one's character as influenced by phenomena such as one's year of birth by the Chinese animal calendar, one's sun-sign by Western astrology or one's blood group. Among a small sample of 8 people who said they believe that blood groups influence one's personality, two (one man and one woman) said they believe in a general way but were unable to give specific examples: they had read about it once and thought at the time that it seemed to fit their personalities, but had subsequently forgotten the details. The others all gave specific examples of how they considered their own personalities matched their blood types, as indicated in the following chart:

---

(27) The cultural patterns behind these advocated child-rearing patterns are of course traditional Japanese ones. Caudill and Weinstein (1969) have shown how American and Japanese child-rearing methods differ to the extent that infants at the age of 3 or 4 months are responding in characteristically different ways in the two cultures, though both would presumably regard their own methods as 'more natural'. Even in Japan there is variation, however, an extreme example being the practice among some farming families in north-eastern Japan by which all babies were left alone in a straw cradle with their arms tied with ropes throughout the whole day while the rest of the family were occupied with farm work, a practice which continued up until about 1960 (Sofue 1983:3).

Men

"I'm group B, which means sociability and cheerfulness".

"I'm group B, and B people are very patient".

"I'm group O, which means I'm a leader, and this fits because I've got (half a dozen) other men under me in my own business. The computer which read my palm also said the same, that I'm a leader".

WOMEN

"B people rise in the world and get things done".

"O people are carefree and happy-go-lucky (nonki), like me".

"I didn't believe in this before marriage but I think I believe in it now. My husband says I'm quick-tempered (kanpeki)[28] and I suppose I am at times, which is supposed to be a characteristic of 'A' type people like me".

One of these men, the man who said he is very patient, said that his attitude to all the items in this question on personality (name, fate, blood groups, heredity, the lines on one's palm etc.) are all immutable and fixed from birth so his attitude to them all is the same: one cannot do anything to change them, so one has to live in the circumstances in which one finds oneself, adapting to them rather than trying to change them[29].

---

(28) This word kanpeki is ambiguous, one meaning of the word being 'quick-tempered' and 'irritable', and another (with different Chinese characters) meaning 'perfect' or 'flawless'. In the context it was clear that the former, negative meaning was intended (a) because it is used of personality while the latter is used for talents, (b) because it is unlikely that a woman would openly call herself 'perfect' in such a context when the interviewer was aware of at least one thing in the woman's past which she considered embarrassing, and (c) because her husband chuckled as she said this in a way which indicated that he had frequent personal experience of her short temper.

(29) This attitude is reminiscent of other characterisations made by some informants who said that the Japanese are like grass which bends before a wind but does not break and later becomes upright again whereas Westerners are like an oak which resists but might eventually be broken.

Some of the ethical implications of these attitudes are far-reaching but not immediately obvious at first sight. The lady whose husband said her irritability was due to her blood group, and who after marriage agreed with his opinion, was partly deflecting responsibility for a character weakness away from her own will or volition to an entity less amenable to possible change, her blood group. Because she is of a particular fixed 'type', she is no longer responsible for weaknesses of her character - exactly the same kind of avoidance of personal responsibility which is often entailed in corporate decision-making, or the recourse to divination in some major personal decision-making. The same principle applies to other types of divination, whether it is one's year of birth by the Chinese calendar or the sun-sign under which one is born by the version of astrology practised in the West as well as in Japan: in all cases one is "fated" to a particular, unchangeable category affecting one's personality and can do nothing to change it. The "excuses" given by different people vary according to the type of divination they personally favour, but all have the same effect of avoiding individual responsibility for character weaknesses. Even the very euphemism 'character weakness' is preferred to blunter words such as 'sin', or more specific words like 'selfishness', 'pride', 'jealousy', 'stubbornness' or 'irritability'. Sometimes designations such as 'irritability' can be used, as in the case given above, but generally informants tend to prefer citing positive features about themselves in relation to their fortune-telling beliefs when interviewed and only use the negative features as excuses for negative behaviour when such behaviour becomes obvious. One final anecdote may illustrate the use of pseudo-scientific character analysis to explain away socially unacceptable behaviour: in the early part of the first fieldwork period a neighbour aged in her fifties acted as 'guarantor' for the landlord that the anthropologist and his wife would keep their

rented house in Aoyama in good condition. This gave her the right to tell us to take down pictures from the walls of the living room when the lady considered they would potentially harm the walls (or were not in keeping with conventional formal styles). Then one day she saw that Ruth had put two vases of flowers in the tokonoma instead of the customary one, so she started to take one out and put it elsewhere. Because Ruth did not accept this compliantly but expressed the opinion that she liked two vases in the tokonoma, the older woman became offended at the younger woman's apparently arguing back in a way Japanese women would not do so directly. Another neighbour then tried to smooth over the situation and restore harmony, and did so by recourse to the pseudo-scientific idea that Europeans and other peoples think with the left half of their brains but Japanese and Polynesians with the right(30); therefore other differences follow, such as the Japanese being more intuitive and emotional etc., and so the conflict with the foreigner is only a result of this immutable difference in brain functioning. In this way a difference of opinion is no-one's fault, but is a product of fixed 'types' of people, each in their own category, an attitude which perhaps also reflects the concepts of purity and pollution in so far as all individuals are assigned a fixed, immutable place in their own pigeon-hole.

The consequences reach further than this, however, in so far as they relate to the concepts of sin and shame. Benedict (1946) tried to categorise Japanese society as motivated more by 'shame' than by 'guilt' or a sense of sin. While it is analytically impossible to demarcate sin and shame feelings in concrete, specific situations in which both are likely to be operative (Doi 1973: 48-50, 53, cf. p p. 159, 161-2), and guilt as a feeling or motivation may also be detected in Japanese society more than may be obvious at first sight (De Vos 1974: 117 ff.), considerations which cast some doubt on Benedict's hypothesis, the behaviour and attitudes

(30) She had read this ina Japanese book but I do not have the reference for it.

reported above tend to indicate a preference to avoid categorising some behaviour as 'wrong' ('sinful' in religious terms), if there is the possibility of explaining it away in other terms. This is one of the uses to which 'folk classifications' of character by blood groups, sun signs, year of birth and so on is sometimes put in Japan, thereby avoiding responsibility for wrongdoing and avoiding also the bluntness of 'calling a spade a spade'.

These practical uses of character-judgement from these various types of divination do not necessarily depend on a firm or absolute 'belief' in the influence of these factors upon personality: rather these ideas are part of a repertoire of possible explanations for behaviour which can be evoked when necessary in a given context in order to explain away unacceptable behaviour in that situation, the type of explanation preferred varying from person to person.

Conclusion:

Birth order has some influence upon the susceptibility to different kinds of beliefs and practices, with eldest sons being more 'traditional' or 'conservative' than their younger brothers. However, once a family settles down in its own home a number of factors make it more likely to possess a Kamidana or Butsudan and these in turn affect beliefs and behaviour. Both these factors work in conjunction to transform or channel basic 'motivations' along certain paths. In a sense, however, both paths are means of finding, or attempting to find, 'security' in the spiritual aspect of one's life: for the elder son, security comes through conformity to the expected life-style and roles of a chonan, but the younger son lacking such a pre-ordained 'security' may try to find it in some way through an attitude that there is something - called perhaps fate or a similar concept - which is ultimately in charge of his life. As such, it gives a certain 'security' of a sort by its immutable nature, and gives a rationale for events which would otherwise remain inexplicable or beyond the limits of interpretability in his life - such as why he was not born before his elder brother, for example. What is immutable or unchangeable in a changing and fluid universe can provide some 'security' of a sort, even if only conceptually or emotionally, by providing some rationalisation for that which is otherwise lacking in interpretability in a person's life. It is such a process, conditioned partly at least by birth order, which brings many men to recognise their own limits and to seek a 'spiritual' explanation for what is beyond the limits of normal interpretability.

CHAPTER 8

HOUSE OWNERSHIP

The purchase of one's own house is an event of major significance to those who have lived in shataku accommodation for many years while saving up for a house or who have spent the first years of their marriage living with the husband's parents before buying their own home. Some housewives who used to live in shataku describe the move to their own home as a "relief" (anshin), as an escape from the claustrophobic atmosphere of the company housing. Others found their "relief" in escaping from living with their mothers-in-law. Universally, possession of one's own home is expressed in terms of the security it affords, even if there is still a heavy mortgage to pay off, because those living in shataku know they must vacate their accommodation on retirement at the age of 55.

Such attitudes express the theme of 'safety' and a variety of religious expressions of this theme are triggered off by the purchase of one's own home. The most common of these is the performance of a jichinsai rite to pacify the god of the ground on which the building will stand. It is performed prior to the first breaking up of the ground in order to lay the foundations but after the site has been cleared and prepared for construction. A week or so before the rite four bamboo poles are erected at the corners of the site and Shinto paper streamers attached to ropes are strung between them. In the centre of the area a small mound of sand about one foot high is prepared, often with some sakaki leaves around or next to it. A convenient and auspicious[1] day

---

(1) Normally this is a tai-an or similar such day.

for the rite is chosen by consultation with a Shinto priest, who arrives at the appointed time to chant prayers for the consolation or pacification of the local kami, these lasting little more than 5 minutes or so. Offerings of sake, sakaki and sometimes other items are then presented by the priest, representatives of the construction company and the purchasers of the house, each of whom then places a spade in the mound of sand and moves it slightly in order to make an incision in the earth as a ritual commencement of the construction process.

A fuller description of this rite is given by Hendry (1981: 218-9), who mentions offerings and prayers at the 'demons' gate corner' (kimonzumi) in a rural area where the owners built their own new house. This feature is also found in at least some urban versions of the rite but importance was attached to it by only one informant in Ueno, a recent migrant from a nearby village(2). Urban attitudes to the ritual tended to be relatively pragmatic, many saying that the rite was included in the cost of the building rather than being an optional extra(3), so they had it done so that they would have the full value for their money.

---

(2) Mrs. Ikeda, the wife of the professional bicycle racer. Their priest had offered sake at the kimonzumi in the same way as described by Hendry.

(3) This is not necessarily true of all firms, and even regarding the firm who originally built the estate some informants' attitudes were that the builders "preferred" to have a jichinsai so they complied rather than offending the workmen.

This is the attitude of the earlier residents of Aoyama, whose homes were all built by the same firm. Later residents who bought houses already built were unaware whether or not a jichinsai had been performed in the construction of their homes, but among later residents whose homes had been built by a different firm a jichinsai had almost always been performed. The two exceptions were a man who had saved the 5,000 yen fee for the jichinsai but threw a mamori charm into the sand to be mixed with the cement as a substitute for the rite, and a family who in 1983 had a house in Aoyama built at a discount (by employing a firm where a relative worked) and who had no jichinsai but instead had a 'roof-raising ceremony' (mune-age shiki).

Several households had a mune-age shiki performed in addition to the jichinsai. In the course of construction a wooden frame is erected followed by the roof before the walls and floors are made, so that the roof is the symbol of a house erected and half complete. Like the jichinsai, the mune-age shiki is a time of celebration and drinking of sake by all concerned, and is also an occasion for prayers for safety. Often a fuda talisman is attached to the main beam of the house under the roof, while a Shinto priest is paid to recite further prayers for safety. Some interpret these rites as being for the safety of the workmen but the majority view them as prayers for the safety of the house and its future occupants. When asked about the efficiency of such prayers, the standard answer is either "Don't know", or "they may have had some effect because the house has not been damaged yet by a fire or earthquake". A few express some scepticism ("probably the rites have little or no effect"), but nevertheless had the rites performed as a "custom" to please either the workmen or the informant's parents who paid for them.

Another set of practices or beliefs which become operative when one buys a house relates to the 'devil door' (kimon). The location of the kimon, determined by geomancy or, in Dore's (1958: 369) terminology, 'direction-lore', lies on the north-east (the 'rear' ura-kimon) and south-west (the 'front' omote-kimon) in homes built on a square or rectangular plot[4]; on those with a more triangular shape the whole diagonal may form a kimon. In older parts of Ueno small shrines in the (south-west) kimon are common, at least one house displaying a conspicious notice asking passers-by not to let their dogs foul the kimon, but in Aoyama such obvious signs of kimon observance are not so conspicious[5]. Instead, particular bushes or shrubs may be planted in the garden in order to protect the kimon, the most common of which is the nanten ('avoiding disaster') tree[6]. All these are external protections against the evil which is said to come from these inauspicious directions. Greater emphasis is placed on the outside corner (kado)

---

(4) Hendry (1981: 217) reports that in Kyushu the ura-kimon is said to be in the south-west corner. Either there is some regional variation in this or else my informants on this were confused about it themselves.

(5) Dore (1958: 367) notes how Mount Hiei to the north-east of Kyoto was made a sacred mountain covered with temples and shrines in order to ward off evil influences which were said to come from the north-east.

(6) As mentioned in chapter 4, the word nanten is composed of the Chinese characters for 'avoid disaster'.

than on the internal corner (sumi), the lexical difference indicating a conceptual difference in attitudes. The principal internal rule regarding the kimon is that it should not be polluted by the toilet - the reason for this, according to one informant, being that the demons could enter the house through the bamboo water pipe used in traditional family houses. Some households in Aoyama say that the kimon should simply be kept "clean", while others extend the prohibition on lavatories to anything involving water, thereby excluding the bathroom and kitchen too. Hendry (1981: 217) records that some households in Kyushu protect the internal corner of the kimon by placing there a Butsudan or Kamidana, but none of the Ueno informants mentioned this practice. Their internal protection comes partly from the fuda attached to the main roof beam if they have a mune-age shiki and more specifically from mamori charms or chimakis in the genkan or tokonoma(7). The genkan has sometimes replaced the kimon as a focus of concern over the entrance into the home of evil spirits, so fudas, chimakis or other charms are usually located in the proximity of the doorway, either outside or inside, above or to the side of the door. New Year decorations are sometimes said to serve the same purpose as mamori charms, as detailed in chapter 6.

Concern over the kimon and direction-lore in general becomes operative when one buys one's own house, especially if one has the house erected specifically for one's own use (as was the case for many Aoyama residents) rather than buying a house already constructed. Shataku dwellers, by contrast, have no choice in the internal arrangement of the house and little choice in the location of plants by the kimon if their garden plots do not lie in that direction. The concept of a kimon does

---

(7) Often these charms are in addition to the possession of a Kamidana in the living room or kitchen.

not apply to those living in apartment blocks, who constitute the majority of Sakurano residents. Information on kimon observances is limited therefore to those who own their own homes.

Dore (1958: 369) asked about kimon observances in the context of a wider question about the practice of majinai, a term for 'superstitions'[8] which includes various rituals before journeys and folk medical lore as well as kimon practices. He found that 15 of the 75 people who denied practising any majinai and who said they did not worry at all about direction-lore then said "Yes" to a more specific question about whether they would feel uncomfortable if they had a lavatory in the kimon (ibid., p.369). His results may be attributable partly to the ambiguity of the term majinai: 65 out of 70 middle-class residents of Ueno systematically asked about their practice of majinai denied any such practice, largely because they did not know what was meant by majinai in this context. Of the remaining 5, two mentioned kimon observances, two Setsubun rites and one the use of Tarot cards. However, when some of the other 65 were prompted by more specific questions regarding kimon observances they then knew what the interviewer was talking about and could reply accordingly, sometimes mentioning their specific practices at their kimon. During the second period of fieldwork a further 16 home-owners were questioned about their attitudes to the kimon; the total replies from all 25 informants questioned specifically about kimon practices are recorded in Table 8.1[9].

---

(8) Dore (1958: 369 and 467) translates majinai as 'superstitions'; another word for 'superstition' is meishin, while majinai seems to have connotations something like 'popular (or folk) - lore'.

(9) This table is presented in this form as a concise way of indicating the diversity of practices and attitudes but is not intended to indicate any statistically significant patterns because the sample size is too small.

Table 8.1 Attitudes to the kimon among 25 informants

Planted nanten trees:	6 people
Planted asebi bushes:	1 person
Placed salt in kimon:	1 person
Keeps area clean:	2 people
Avoided putting toilet there:	1 person
Checked proposed plan of house with carpenter or priest regarding kimon prohibitions:	3 people
Concerned about kimon but too expensive to alter plan of house accordingly:	1 person
No attention to kimon yet, but might look into it if any disaster befell the house:	1 person
Deny any concern with the kimon:	9 people

The list in Table 8.1 is arranged according to the principal practices concerned with the kimon reported by each household, but often those who plant nanten trees, for example, also keep the area clean and avoid having the toilet there. However, the kimon itself is only one of the constituent features of the 'system'(10) of direction-lore which influences the lay-out of a house. The extent to which these principles are observed differs among households, some of which observe some unusual elements of the 'system' deriving from specific local traditions. An example of the latter is the family who planted asebi trees in their kimon, since the woman who did this had been told by a peddler selling the plants that asebi was 'lucky' in the kimon; not having heard the tradition before, she bought some asebi but reported that the plants soon withered in that location.

Concern over the kimon is normally manifested at times of moving or extending a house, and sometimes at times of domestic crisis. The following case studies illustrate some of the individual situations which can give rise to such concerns, and the variety of responses to it.

---

(10) The term 'system' may be misleading if it implies that all the component parts systematically fit together into a coherent pattern. Rather, general, widespread features such as the kimon are combined with local lore about particular plants in a way which can be mutually contradictory at times.

(a) The Kaneda family[11] wanted to move into their present home (bought already built from the previous owner) on an auspicious day, so they asked a friend of Mr. Kaneda's mother, an expert in geomancy, to check over the house. She said the position of the house was "very bad" so that the only time they could safely move in was at Setsubun, advice which the Kanedas followed.

(b) Another family buying their home from a previous occupant consulted a fortune-teller about an auspicious time for the move. This expert in 'life-fate divination' (unseihandan) made use of astrological data from the husband's date of birth (seinengappi) and pronounced that the best month that summer for the move would be May, June being "bad". However, the previous occupants of the house could not move out until June, so the buyer handed over the money for the house and acquired its legal ownership in May even though he had to wait until June before he could move in.

(c) An Aoyama man who bought his house when the site was first developed chose the type of house he wanted from the range of pre-fabricated houses on offer but asked for a few modifications in the design to be made in accordance with direction-lore. Instead of the steps leading to the main entrance going from the south-west corner of the plot (the omote-kimon) he had them ascending parallel to the road on the front side of the plot, the visitor then having to turn right to face the front door. He also had the garage put on the right of these steps rather than the left in order to avoid the kimon. The same man keeps a nanten tree in his ura-kimon and had a mune-age shiki in which a protective fuda was placed on the roof beams.

---

(11) See chapter 3.

d) Another Aoyama household put an extension onto the southern side of their house so called in a Shinto priest to check it for direction-lore. At the time (December 1983) the husband was about to enter his 60/61[12] year old yakudoshi and a 'mobile' deity Konjin who moves around the sky happened to be in the West; these were both indications that it was an inauspicious time to build an extension and the priest advised them to wait one year until the husband was past his yakudoshi, advice which the family has followed.

Various informants say that if these rules or 'customs' regarding direction-lore are not followed the gods can become angry and manifest their displeasure by fire or flood affecting the house or by accidents or illness among those living there. The following cases show how such misfortunes can be attributed to neglect of the kimon:

e) Mr. Murata says that one must not let the nanten trees grow as tall as the eaves of the house, his attitude being influenced by the experience of his stepmother 20 years previously. "She was a very healthy and strong woman but took a very long time to recover from a stomach operation. The local Shinto priest said this was because our nanten had grown up to the eaves and advised us to cut some of it down. We did so, and shortly afterwards my stepmother fully recovered. It may be superstition... but I don't know". This experience also influenced Mr. Murata to be careful of another taboo which says one should not have the genkan facing north. His chosen house plan involved the genkan on that side, so he asked the architect and builders to construct the house at a slightly oblique angle so that the genkan did not face due north.

In the Niigata area where he grew up there was an idea that one should not plant fruit trees in the garden, but Mr. Murata has disregarded this part of the local folk-lore. To some extent this may be because other

---

(12) He would be 61 by kazoe reckoning but 60 by the 'Western' reckoning normally used.

variants of this idea say the opposite - that it is good to have fruit trees in the garden. Another informant explained these ideas as part of a play on words involving the homonyms mi 実 for 'fruit' and mi 身 as a reading for the word 'body'. To say 'the fruit hangs down' (mi ga narisagaru 実がなりさがる) is homonymous with saying a person is unhappy (身がなりさがる): therefore one should not have fruit trees in one's garden. However, other local traditions reach the opposite conclusion by saying that 'to bear fruit' (mi o musubu 実を結ぶ) is a good meaning and its homonym also has positive implications regarding the union of a man and woman (身を結ぶ)

f) Mr. Suehara's elder sister died in 1973 when she was a student at a University in Kyoto. The circumstances of her death are not normally discussed by the family, but local gossip says that she had fallen in love with a sports instructor but her mother disapproved of the match, considering only miai to be 'proper' or socially acceptable marriages, so the young woman had committed suicide by drinking some chemical fertiliser. Whether or not this story can be accepted as 'true', it is consistent with two behavioural idiosyncrasies in Mr. Suehara's mother. Firstly, she now refuses to eat any food which has been treated with chemical fertiliser, so her daughter-in-law has to shop at specialist stores selling only 'natural' foods, and, secondly, she had a fig tree in their garden cut down soon after her daughter's death. She was not available for interview about her views on this, but her son, who reported this fact, said it might be related to the superstition that one should not have a fruit tree inside the territory of one's house, or it might be on account of practical reasons relating to shade and humidity in the garden. Whichever the case, the mother's action was very soon after their daughter's death and seemed to be some kind of a reaction to it.

g) The final example of responses to direction-lore involves one Aoyama family, the Inoues, through their participation in monthly prayers for the husband's elder brother whose illness is attributed to neglect of kimon taboos. This elder brother had inherited the family shop in an older part of Ueno but his younger brother in Aoyama (a 'salaryman' in a local firm) and his wife sometimes help out in the shop during busy periods. Their version of the story is as follows:

Several months previously the elder brother had begun to experience an itch on his penis, both internally and externally, plus pain when urinating or engaging in sexual intercourse. He went to the hospital, but they could not find a medical cause and said it was a psychological and subjective symptom (ki no sei; jikakushōjō). When the symptoms persisted, however, Inoue-san's family consulted a Shinto priest, who said that their house, dating from the early nineteenth century(13), had its kimon on a diagonal boundary (taikakusen) where there was a storehouse (monooki). The priest said that cement and similar items should not be heaped up in the kimon, neither should bicycles, dogs or various other items be kept there, otherwise misfortune will befall the family. About three years previously the family had replaced the doors of the storehouse, involving the noise of carpentry and of hammering in nails, and so Mr. Inoue's illness was attributed to this. The priest said that other aspects of the building's geomancy were wrong too, and prescribed three courses of action which in conjunction with one another would, he said, heal Inoue-san's illness.

---

(13) Dating from the Taishō period: 1912-1926.

Firstly, Inoue-san had to put offerings of salt and a dish of water at the kimon daily. Secondly, he and his wife had to make a journey on a particular auspicious date to a peninsular on the coast 120 kilometres away, this location being in a direction which would nullify the inauspicious direction in which the house had been built. They were to stay at that peninsular for 4 hours before returning to Ueno. This they did.

Thirdly, each month the Shinto priest comes to perform a ritual purification of the kimon and the family have to prepare an offering consisting of seven different colours (e.g. red apples, yellow bananas, white radishes etc.). Normally this is on the 15th of each month, but if this is inconvenient owing to the shop's hours of business it can be performed instead on the nearest convenient day to the 15th. However, the 15-minute ritual must be performed between 1:30 p.m. and 1:45 p.m., these times being "decided by the gods" so no member of the family is to be late. All arrive in good time, including the younger brother and his wife who live in Aoyama but help out at the shop and were present when the storehouse doors were replaced. So far the elder brother's illness has not been cured by this treatment.

Most of these practices relating to house ownership - jichinsais, mune-age shikis and kimon observances - relate to the theme of 'safety'. All are precautionary, motivated by the fear that if the proper rites are not performed some disaster will befall the home. If such a disaster does occur then it can be attributed to the neglect of one of these rules, most commonly those concerned with the kimon, often a rule of which the family were unaware at the time of its breach. A specialist can point out the mistake and prescribe a course of action to remedy it. The diagnosis is often made by invoking a minor rule of which most people are unaware (such as a prohibition against nanten trees - planted to protect the kimon from evil - growing as far as the eaves), the infringement

of which is held to be responsible for the current domestic crisis.

In cases (e) and (g) above, the infringement of a kimon rule was held to be responsible for an illness, but this is only one of a range of religious responses to illness which seek a basis for the management of sickness by providing an answer to the question "Why me?"(14). It is at the limits of interpretability, reached through the occurrence of a serious or unusual illness, that a 'spiritual' interpretation is sought. Since the illness is a threat to one's physical welfare and security, it is most usually the motivation of 'safety' which is triggered off by the assumption of a sick role. Some of the alternative responses to such medical problems are explored in the following chapter.

---

(14) Dore (1958: 366-7) lists three different religious approaches to this question. The first sees this life as a 'vale of tears' but looks forward to a final righting of injustices in the next life. The second is the Buddhist answer which says that none can escape from the consequences of sins in previous existences, but by fortitude and faith one can eventually hope to attain Nirvana. The third approach answers the question more directly by pointing out some ritual infringement which has occasioned the wrath of the gods or other spiritual entities. Kimon observances are of this third type.

To Dore's list could be added a fourth type of answer, which says, "Whatever factor this illness may be attributed to (whether one's own sin, that of others, or the influence of demonic powers, etc.), it can be cured in this life by the power of God". This may be a variant of the first of Dore's types, but it puts the emphasis on "Why not me?", in that all are sinners or subject to influences from evil spiritual powers, and then emphasises healing in the here and now rather than the future. It is an emphasis found in some Japanese 'new religions' (Davis 1981) and also in many charismatic or evangelical Christian churches.

CHAPTER 9

ILLNESS

As one of the crises of life in which a person's weakness becomes manifest, illness produces recourse to superhuman power among many peoples of the world, perhaps all. In Japan this response was often mediated through shamans or faith-healers in earlier historical periods and in some rural areas today (Blacker 1975, ch.6; Norbeck 1954: 83, 134-7; Befu 1971: 112-3; Namihira 1974:239), and this shamanic tradition has persisted into the character of the women who founded some of the 'new religions' popular in urban Japan (Blacker 1975; Offner and Van Straelen 1963; Davis 1980: 161; Dale 1975:18; McFarland 1967: 74). Many new religions whose 'shamanic' roots are less obvious also emphasise healing, magic and miracles (Offner and Van Straelen 1963; Davis 1980; Dale 1975: 119-120, 133, 144-6;), but it is the attitudes behind the use of such alternatives to ordinary medicine on the part of ordinary people which is the present focus of concern.

In one major study, that of Mahikari by Davis (1980), it is clear that one of the motivations behind the 'religious' use of healing involves purity and pollution concepts. Mahikari adherents view medicine as 'poison' (Davis 1980: 22, 24, 36, 256) and claim that illnesses are caused by evil spirits which lodge in the impurities and toxins within the body and need to be exorcised. Health comes from ridding the body of such toxins and exorcising the spirits - i.e. by the removal of both physical/medical and spiritual 'dirt'.

It is not clear from Davis' account whether Mahikari adherents view all medicines as 'poison' or only 'Western' 'synthetic' ones, but their attitude is consistent with a more widespread Japanese view which regards cosmopolitan synthetic medicines as 'dangerous' because of their many side-effects, sometimes producing iatrogenic ailments, and are

therefore potentially 'poisonous'. By contrast, traditional East Asian herbal medicine is reputed to produce fewer side-effects and to be 'safer': therefore in attitudes to medicine, purity and pollution concepts that cosmopolitan medicine may be 'poison' blend together with the attitude that herbal medicine (kampō yaku) is 'safer' to produce a recent revival in the use of traditional East Asian medicine - especially kanpō and acupuncture (cf. Lock 1980: 152, 1984, 10-13)(1).

The motivation of 'safety' permeates other aspects of the use of East Asian medicines. Very often kanpō or other traditional medical systems emphasise preventive medicine through the regular use of herbal remedies, massage or other treatments (Lock 1980: 204, 245-6) - the same kind of security which comes from being 'forewarned and forearmed' (cf. Benedict 1946:22-24) and being able to cope better with a crisis if one is prepared for it. In the same way yakudoshi charms are bought and prayers said at New Year in order to prevent imagined misfortunes from occurring in those years: one is forewarned about the dangers of a yakudoshi so one prepares for it through preventive rather than curative prayers or charms. Similarly, many prayers at a Kamidana or Butsudan ask for a healthy and safe day, as preventative prayers, while the attitude

(1) The use of herbal medicines in their traditional 'raw' forms often reduces side-effects because the natural herbs contain trace elements or compounds which mitigate the side-effects caused by the principal active ingredient (Lock 1980: 135-6). However, the recent adoption of aspects of herbal medicine within the mainstream cosmopolitan system has led to doctors trained in cosmopolitan medicine prescribing pre-packaged doses of herbal medicine as if they were synthetic drugs without regard to the nexus of traditional theory and the careful balancing of herbs and dosages according to individual needs: this mis-use of kanpō has led to an increasing incidence of side-effects (Lock 1984: 12-14, 20-21).

to possession of a mamori charm is likewise a preventative one: "if I didn't have one, something might go wrong or I might have an accident".

Not only are there similar attitudes towards the preventative aspects of yakudoshi rites and of East Asian medicine, but it may be that the former in itself can initiate an interest in the latter. Generally East Asian medicine is used for chronic illnesses which are less amenable to treatment by cosmopolitan synthetic drugs, so that those who begin to use traditional therapies are often aged 40 or over (Lock 1980: 99-100). The increasing incidence of chronic ailments among middle-aged and older people is consistent with the common idea that yakudoshis indicate a change in the life-cycle and in bodily health, with a greater susceptibility to illness as the body deteriorates[2]. For men at least, an interest in or acceptance of 'alternative medicine' may be triggered off by their yakudoshi at the age of 42, or else the yakudoshi may be a factor predisposing them to use alternative forms of therapy if they afterwards experience some form of illness not amenable to conventional 'Western' style treatments.

Some relationship between the experience of a yakudoshi and the use of East Asian medicine is indicated by the correlation between these among 36 people questioned about their use of traditional therapies. The relationship is much clearer for acupuncture and shiatsu (a kind of 'pressure-point massage') than for kanpō because the latter has enjoyed a sudden popularity and is now sometimes prescribed by doctors trained in cosmopolitan medicine (Lock 1984: 12-21); it appears also that a few informants may have classified folk remedies as kanpō, whereas the latter is strictly Chinese herbal medicine with its own complex body of theory and prescription[3].

---

(2) Cf. also Lock 1980:141, where this attitude towards the body deteriorating is mentioned in the context of East Asian therapy rather than that of yakudoshis.

The relationship between passing one's principal yakudoshi and the use of East Asian medicine is indicated by the following correlations:

Fig.9.1: Use of Acupuncture

	Male		Female	
After Yakudoshi	For: Lumbago:	1	For: Stiff hips and legs:	1
	Stiff shoulders:	1	Tennis elbow:	1
	Twisted ankle:	1	Headaches:	1
	Nervous temperament: (shinkeishitsu)	1	Child's misbehaviour: (kan no mushi)(4)	1
	Never used:	8	Never used:	3
Before Yakudoshi	Never used:	8	For: Sprained foot:	1
			Trapped nerve in hand:	1
			Whiplash effect after car accidents:	1
			Never used:	6

(3) The four 'folk cures' which were cited as kanpō remedies are: (i) the use of gingseng for slimming, (ii) the use of persimmon leaves in a cure for high blood pressure, (iii) the use of boiled dokudani (**Houttuynia cordata**) plants during pregnancy, (iv) the use of an extract of plum for abdominal distress. An unspecified cure for hiccoughs might be included in this list too.

(4) See Lock (1980: 95-6) for an explanation of this 'disease' which is said to cause children to misbehave, one of several culture-bound Japanese ailments (cf.also Lock 1983: 17-27); shinkeishitsu is also a culture-bound nervous complaint (Lock 1980: 223, 258).

(5) The mother's explanation for this is that the kanpō medication is 'natural' so causes no side-effects on the child.

(6) She feared it may be stomach cancer so went round three different doctors, each of whom assured her that she would recover after rest and relaxation, but she was satisfied with this explanation only after the third doctor had conducted extensive blood tests and x-rays as visible 'proofs' of his investigation. It is not unlikely that her stomach problems were initiated by the tension following a major row with her husband about his late nights and lack of contact with their children.

Fig. 9.2:

Use of shiatsu ('pressure massage')

	Male	Female
After Yakudoshi	For: Muscle ache: 1 Stiff shoulder: 1 Never used: 10	For: Muscle ache: 1 General fitness: 3 Never used: 3
Before Yakudoshi	Never used: 8	Muscle ache: 1 Never used: 8

Use of kanpō (herbal medicine)

	Male	Female
After Yakudoshi	For: Stomach medicine 3 Overdrinking 1 Colds 4 Waist pains 1 Preventative medicine 1 Never used 2	For: Cure for hiccoughs 1 Dokudani infusion during pregnancy 1 Never used 5
Before Yakudoshi:	For: Gastritis 1 Abdominal distress 1 High blood pressure 1 Recovery from fatigue 1 (after a bicycle race) Never used 4	For: Colds 1 Muscle ache 1 Constipation 1 Child's nappy rash 1 Slimming 1 (5) Never used 4

It can be seen from these figures that the use of acupuncture and shiatsu increases in the proportion of respondents who have passed their principal yakudoshi whereas the recent popularity of kanpō is evident among younger generations too. The relatively high proportion of women past their principal yakudoshi who have never used kanpo is largely

attributable to the fact that three of these are in their middle thirties so have only recently experienced their principal yakudoshis and are relatively younger than the men who have passed their principal yakudoshi and, being older, might have had a greater exposure to the types of illnesses treated by kanpō. Two women have used East Asian medicine on behalf of a child rather than on themselves, and three others themselves practice shiatsu on other family members, having learnt it as part of a general fitness programme. The relationship with a yakudoshi is clear for one of these women, Mrs. Kimura, who during her yakudoshi in 1982 speculated whether or not some stomach pains were due to her yakudoshi(6). The following year a friend of the same age joined a keep-fit class, so Mrs. Kimura decided to join one of the courses too and chose the cheapest, a shiatsu course. When in 1984 she explained her reasons for studying shiatsu, her primary motive was given as a concern about her health following her stomach problems two years previously.

Mrs. Kimura's attitude, and that of the other two women in the same category, is that East Asian medicine is more prophylactic than curative, an attitude also shared by the man who bought substantial quantities of kanpō medicines while on a trip to China, which he regularly takes in a preventive capacity. A similar emphasis on preventive medicine might underlie the popularity of taisō - group calisthenics - throughout Japan. At Nissei almost all employees participate in these for about ten minutes before work commences each morning, exercising in accordance with the instructions broadcast on the factory public announcement system. About half the employees also participate in the mid-afternoon repetition of the exercises. In the summer months at 7.00 a.m. each morning many school children in Aoyama and Sakurano, their mothers and a few of their fathers participate in such group exercises in one of the play areas around Aoyama or in the open area near to a group of shataku blocks; each jichikai organises these events and gives prizes

to those children who consistently attend the exercise sessions all summer. Similarly, the local sports day commences with such group calisthenics by all participants. This emphasis on fitness and health is consistent also with the provision of free annual medical check-ups for all Nissei employees (which also has economic benefits in reducing work loss through illness and payments through the firm's health insurance scheme). The overall effect of such practices is to reinforce the general emphasis on prevention of illness and security through being prepared and 'forearmed', just as one can prepare for a yakudoshi through the appropriate rituals.

Religious ritual is triggered off by the occurrence of illness in the same way as recourse may be made to East Asian medical systems - through the failure of cosmopolitan medicine to treat the illness satisfactorily. The two courses are not necessarily exclusive but may be complementary: the failure of cosmopolitan medicine may lead to the use of East Asian medicine and/or consultation of religious specialists. The choice of paths is probably determined largely by the individual's predilections, background and exposure to different types of medical systems, as indicated by the fact that only two men who had passed their principal yakudoshis had never used any type of East Asian medicine - both of these being men whose work involved pharmaceuticals(7). Only one woman aged over 40 denied having ever used East Asian medicine, but she paid special

---

(7) One of these is Dr. Satō, a pharmacologist, and the other is a hospital administrator responsible for buying drugs. However, Lock (1980: 251-2) notes that a significant proportion of cosmopolitan doctors are receptive to East Asian medicine and sometimes use it themselves. In fact, Dr. Satō is not wholly free from the use of traditional therapies either because his wife afterwards reminded him that when she massages him she also uses shiatsu techniques to some extent.

attention to religious 'preventative medicine' by proper performance of yakudoshi, kimon and kamidana observances.

The complementary use of religious, East Asian and cosmopolitan therapies is illustrated by Mrs. Yamane's behaviour during pregnancy. Like virtually all other Ueno housewives, she attended a clinic practising cosmopolitan medicine for all her ante-natal check-ups and for the birth itself. In the fifth month of pregnancy she bought a hara-obi from Nishiyama temple and at the same time purchased a 'safe birth' (anzan) mamori which she attached to whichever of her three hara-obis she was wearing at the time (changing them three times daily in the summer) and which she returned to Nishiyama temple the following New Year. She also bought from a pharmacist dried dokudani herbs to which she added boiling water to make an infusion called senjugusuri which she often drank during pregnancy. This is said to purge the body of the poisons and toxins which a woman is said to produce in her body during pregnancy - a 'folk belief' which may have contributed to the formation of Mahikari doctrine. Mrs. Yamane says that she took senjugusuri on the recommendation of her mother-in-law, because, she says, "you tend to believe lots of things when you're pregnant and anxious about the baby". Her anxiety (fuan) was given relief (anshin) by this combination of practices derived from a variety of medical and religious systems.

In Mrs. Yamane's case the different systems are complementary, but at other times one can supersede another, as for the man who takes kakontō (powdered arrowroot, kuzu) for colds to reduce a fever but if his temperature exceeds 39°C goes to the cosmopolitan medical practitioner. More commonly, however, the supersession is that of cosmopolitan by East Asian or religious therapies (cf. Lock 1980: 243-4, 249-250, 253-4) when the former fails to deal with specific (usually chronic) disorders. The religious specialist consulted is usually either a medium or a Shinto

priest, as illustrated by the following case-studies:

Before Mr. Inoue, a 'salaryman' in a local firm, moved to Aoyama he used to live in one of the older housing areas of Ueno near to his parents' shop now taken over by his elder brother[8]. His moving house was prompted in part by his experiencing a 'mysterious' fever in his former home which 'Western' cosmopolitan medicine was unable to diagnose or cure. Suspecting it could have been a curse (tatari) from the ancestors, he consulted three different people for their opinions. His elder sister's husband's mother (a kind of local 'wise-woman') could not give an opinion, so he then consulted a priest at a large, prestigious shrine, who assured him it was an illness from tiredness which would heal naturally. Finally he went to a medium in the Nishiyama area who told him that his mother's uncle died of cancer and wanted memorial rites (kuyō) said on his behalf by Inoue-san and his mother together. If these were not performed, Inoue-san would not recover. Furthermore, each morning and evening for two weeks they were to pray to the mother's brother at the Butsudan in his house, putting their hands together, chanting and telling the ancestors (hotoke) that they were relying on the deceased uncle for healing. Having done that, they were to take fresh, clear water and pour it out from the house over the entranceway (genkan) and around the house to remove ritually all contamination or pollution so that Inoue-san would recover. While doing this they were to keep silent and not reply to any passer-by who greeted them. The family did this but Inoue-san himself was unable to be present for all of it because he was hospitalised, so he had to listen to all the praying and chanting over the telephone.

---

(8) His elder brother is the one whose medical problem was attributed to their putting a new door on a storehouse in their kimon (see ch. 8).

At the same time the medium said that the family had neglected the worship of Jizō, statues of whom had stood both in frontof and behind the Inoues' house. However, the one behind the house had been moved several yards when their house was built and the family did not perform rites (kuyō) to it. The medium said they should begin to pray to and put offerings before both of the Jizō images and then Inoue-san would recover. They did so, but the illness continued for several weeks before Inoue-san finally recovered from it.

The following year Mrs. Inoue, then aged 25 and her husband 32, gave birth to their first child, a son. For three weeks she remained mainly in bed looking after her infant before returning home. Soon after recommencing her normal household tasks she became very weak and found herself unable to get up or move around for long without becoming exhausted, a condition which persisted until the childwas 7 months old. Neither cosmopolitan nor kanpō medicine seemed to have any effect so when the illness had continued for 5 months she asked her husband's mother to consult the medium on her behalf to discover whether or not she was suffering from a supernatural curse or punishment (tatari). This time the medium said that there was no problem with her worship of Jizō but instead she was to rely more on and pray to the Buddha (Hotoke) and gods (kami) because she had neglected such cults up until then[9]. At 8.00 a.m. each morning she was to take boiling hot green tea to the genkan of her house, chant and pray (for recovery from illness) to all the ancestors of her family but not to utter a word of explanation to any of the neighbours or passers-by. Then she was to pour the tea outside and let it flow from the genkan into the drainage channel in front of the house, a procedure which she continued for one month until she recovered.

---

(9) As Mr. Inoue is a second son, she had no formal responsibility for the Butsudan cult in any case.

She regards her recovery as due, in part at least, to her faithful performance of this ritual, and she explains the significance of the genkan as the place where not only people but also hotoke and kami enter the house and watch what is happening.

Shortly after this her son became ill with an unexplained high temperature and lethargy. Thinking it may have been from the same cause as his mother's illness, the Inoues consulted a medium, who prescribed the same course of treatment (boiling tea poured from the genkan), this time at 7.00 a.m. daily. This was continued for two weeks and the child recovered. By this time the family were wondering whether their misfortunes might be due to the house they were living in. Other factors such as the house being relatively old and their close proximity to the husband's family also influenced their decision to move across Ueno to Aoyama in 1982.

Two older men in Aoyama had also consulted mediums regarding illness. The teenage son of a 49-year old man had a pain in his right hip which could not be diagnosed by the hospital even after x-rays. The father consulted a medium, who said that there was no spiritual cause for the illness and instead suggested acupuncture, which relieved the pain for a while but the treatment is continuing.

A similar case involves a 52-year old Aoyama man who suffers from gall stones, for which he takes both cosmopolitan and kanpō medicines[10]. He claims that his loss of hair in patches is due to his gall problems, but he also consulted a medium to check whether or not it may also be due to some spiritual cause, such as neglecting rites for one of his 11 generations of ancestors. However, the medium assured him that his was a purely medical and not a spiritual problem.

---

(10) His wife takes a more sceptical view and regards many of his stomach complaints as due to his eating too much too quickly.

It should be noted that both these men are of an older generation, both perform ancestral rites every day and are relatively scrupulous about them: the first man openly boasts of being "more religious" than his neighbours, while the other keeps a careful note of death anniversaries in his kakochō and performs rites when appropriate for his ancestors. It appears as if such men are more prone to suspect supernatural causes for unexpected illnesses partly because of their strict observance of ancestral rites - suggesting that at least one element in their motivations for performing the rites is a fear of supernatural vengeance if the rites are not performed properly. By contrast, the three cases following in which Shinto priests are consulted involve younger people with no formal responsibilities for the Butsudan cult.

Mr. and Mrs. Matsui are both from an older neighbourhood of Ueno[11] and had been married for 5 years without being able to conceive a child. They then consulted a Shinto priest who advised them to install a Kamidana in their home and pray to the gods daily for fertility. Mr. Matsui constructed a home-made Kamidana and the couple prayed daily at it for almost a year before a childwas conceived. After her birth, they took her to the priest for him to choose her name, and now they visit that shrine every month "without fail" in order to give thanks for their child there as well as at their domestic shrine daily[12].

---

(11) They had met at an abacus class and knew each other for 12 to 13 years before they began to date; they married 2½ to 3 years after that.

(12) It is noticeable that they keep a mamori safety charm conspicuously attached to their daughter's clothes for her continued protection.

Mr. Katsumi is one of the few shataku apartment dwellers to possess a Kamidana, having bought it 5 years previously when he began to experience serious blood clotting necessitating frequent hospitalisation. Now every day he prays for health for himself and his family and gives thanks for their continuing health.

Mr. Yamamoto is another apartment dweller with a Kamidana, who also bought it when he experienced illness. In his case it is a glandular problem causing excess fluid retention and overweight, a condition which has persisted for 20 years. His wife is the one who gives thanks to the ancestors every evening for the family's health.

These cases of recourse to Shinto priests and Kamidana worship do not seem to have involved use of East Asian medicine in addition[13], whereas the older men who consulted mediums also used East Asian therapies. There are several paths which can be taken in the recourse to therapies, depending on the nature of the illness and the age or background of the sufferer. Essentially the paths are:

Failure of Cosmopolitan medicine → Use of East Asian medicine) or
Failure of Cosmopolitan medicine → Consultation of religious specialists) both (14)

This process may be rewritten in the framework of the Japanese concern for safety and security, namely:

Failure of cosmopolitan medicine → Insecurity about established medicine (15) → A search for substitutes → Re-establishment of security (or 'safety') in alternative medical system.

---

(13) Compare also Lock (1980: 122), who notes how several of those using East Asian medicine have also used religious cures.

(14) This was definitely the case for the Matsui and Katsumi families, but Mr. Yamamoto was not asked about his use of East Asian medicines.

(15) This insecurity relates particularly to the concern about side-effects and iatrogenic illnesses, such as thalidomide children etc. (cf. Lock 1980: 104). Lock (1980: 250) also mentions the use of, or interest in, traditional medicine 'largely as a form of security' for some people.

Blending in with this theme of 'safety' is a minor tributary from 'purity and pollution' concepts regarding synthetic medicines as 'poison' and favouring natural herbal medication.

A final, relatively minor, relationship between medicine and religion is the specialisation by some shrines or temples in particular rites or foods relating to medical matters. Reference has already been made to the Iwadani shrine and yakudoshi charms, but a fuller discussion of the use of other temples and of particular deities (including Jizō in this category) for medical purposes (various places or images specialising in different curative properties) will not be discussed any further in the present context because a very comprehensive study on these is already available (Ohnuki-Tierney 1984). However, enough has been shown by the analysis and case studies presented above to demonstrate how illness can serve as a precipating factor in provoking recourse to 'spiritual' resources. By making people aware of their human limitations and frailties, the experience of illness (or the potential of contracting illness, as in a yakudoshi) may serve to channel people's thinking towards the possibility of relief obtainable from the 'spiritual' sphere or dimension of their existence.

Conclusions

There are many different kinds of illness, which can produce different reactions in various types of people, but there seems to be an increased awareness of one's health from around the time of one's principal yakudoshi onwards, which may incline people to an increased use of East Asian medical techniques. However, religious forms of 'therapy' may also be used, often in conjunction with medical resources, and especially when cosmopolitan medicine is unable to treat a particular complaint. Very often the underlying motive in using East Asian or religious forms of therapy is an insecurity about one's state of health, often combined with a fear of

potential side-effects from cosmopolitan synthetic drugs. It is then that alternative medicine (including religious therapies) may be sought out and tried, in an effort to re-establish some 'security' regarding one's health. In such ways the experience of illness, especially chronic illnesses, evoke an underlying 'motivation' of 'security' and in at least some cases may channel this into a response which seeks 'spiritual' help for one's recognised physical limitations. It does not have this effect on all people, although for many it may stimulate recourse to East Asian alternative medicine even if not to religious therapies. The available data is too sparse, and the variables too many, to indicate which kinds of people are most likely to investigate religious modes of relief, but it is clear from the case studies that such a route is followed by at least some people. Even if only on the basis of statistical probability, some people will choose a 'religious' option when confronted by the experience of illness, but all people, whether choosing a 'religious' or a 'non-religious' mode of action, seem to be motivated primarily by a desire to re-establish the 'security' of health at a time when the experience of illness generates an insecurity about their futures or their ability to cope by themselves with all crises of life. By drawing attention to the fact that all men are fragile and weak, the experience of illness may often channel human responses into a mode which seeks for some super-human or 'spiritual' resources of power and healing which might become available to man. In such people the response to illness may be labelled 'religious', according to the criteria outlined in chapter 1; recourse to 'human' solutions alone characterises the 'non-religious' response, while the two groups are differentiated by whether or not their recognitions of their own human frailty or weakness lead them to seek the healing power of a super-human, 'spiritual' dimension in their lives.

Chapter 10 Male and Female

The Shinto emphasis on ritual purity has largely relegated to Buddhism virtually all rites for the dead, as a 'polluted' or 'polluting' category of people. In the same way, the Shinto priesthood is male, largely, it would seem, because the polluting character of menstruation or childbirth would preclude women from such functions at periodic intervals (cf. Norbeck 1952: 271-3). However, Buddhism, which does not contain such an overt purity and pollution ideology, also discriminates against women to a large degree by a virtual monopoly of offices in male hands - plus a very small number of nuns (Sally King, researching about 'Women in Buddhism', personal communication) - a practice which claims theological support in the legendary accounts of the Buddha's reluctance to admit female followers (E. J. Thomas 1949: 107-110; A. K. Reischauer 1970: 45-6), but, as Southwold (1983) has recently made clear, it is very difficult to know what the Buddha actually taught about anything (pp. 114-124). Whatever the reasons behind this situation, it is clear that both Shinto and Buddhist priesthoods have become largely the domain of men, and that at least for Shinto this state of affairs probably has some connection with the recurring periods of ritual impurity in the female life-cycle (1).

(1) The Buddhist attitude to women is linked by Hashimoto (1963: 37-8) to the emergence of stories about female ghosts without hands or feet during the Edo period, when Buddhism was given official prominence and orthodoxy. He writes (1962: 38) that 'the predominance of female ghosts during Yedo era may be attributed to the combination of the Buddhist belief in Innen (Cause and Effect) with the deep sense of bitterness felt by the Japanese women of the time who for the most part led unhappy lives during those dark days of the feudalistic Tokugawa government'.

However, early records indicate that around the 7th century A.D. (and probably earlier too on the basis of some archaeological evidence) female shamanesses played an influential role in political affairs (Hori 1968; Blacker 1975, chapter 6; Sasaki 1984: 82). Later these miko were incorporated into the orthodox Shinto tradition to become the paid shrine assistants of today with no 'charismatic' functions, but some continuing 'unorthodox' tradition of female mediums, shamanesses or faith-healers seems to have continued in many areas into the present time (Sasaki: 1984 75-7, 81-2; Blacker 1975, chs. 7, 8, 13 and 14; McFarland 1967: 71-4). Although these are not exclusively female, women do constitute the majority of such specialists (Sasaki: 1984: 80-82; Bunce 1955: 1973: 113).

Therefore one can discern two complementary but opposed forms of religious manifestations chracterised by the following general differences, although the margins do overlap in places:

Fig. 10.1: Male and Female Religious Roles

	Mainly Male	Mainly Female
Personnel:	Priests	Shamanesses
Legitimacy:	Institutionalised	Unorthodox
Authority:	Bureaucratic	Charismatic

Over time, some (female-inspired) 'charismatic' and unorthodox groups may become institutionalised and subsumed under the bureaucratic structures of orthodoxy, although at any point in time there is a certain competition for allegiance between the orthodox and the unorthodox, the bureaucratic and the charismatic forms of religiosity.

Such rivalry at the level of those who 'sell' the religious product is not necessarily perceived as an either/or choice by those who 'buy' them, but instead the two may serve complementary functions for the 'user'. This complimentary aspect has been noted by Sasaki (1984: 82-3), who notes that visits to Buddhist temples and Shinto shrines constitute the 'front' (omote) or 'public' aspect of religiosity whereas the private, 'rear' (ura) aspect is the domain of shamanism, spirit possession and consultation of mediums regarding particular problems of daily life. He continues by noting that there are areas of Japan where Buddhist priests and shamanic mediums perform funerals in co-operation with each other - the former supposedly leading the soul of the dead to the other world but the latter bringing it back as the occasion so demands; there are even cases of husband and wife teams where the man is a Buddhist priest and his wife a shamanic medium (ibid.). In fact, on a practical level the 'unorthodox' forms of religion are often more important, as indicated by the figures cited by Sasaki (ibid., p.75) showing how among those in Miyagi prefecture who claim to belong to the Sōtō Zen sect of Buddhism, 6.7% knew the names of the Buddha Sakyamuni or the two founders of the sect, 10.2% of them had any experience of meditation, 38.7% had visited ashaman and 71.5% knew local shamans.

The most conspicious manifestations in recent times of female leadership roles in religious activities are found in the 'new religions'; some of those which are no longer quite so 'new', having their origins in the final phase of the Edo period or during the Meiji period (both times of social unrest and political change; cf. McFarland 1967: 54-63),

were often founded by women with 'charismatic' personalities such as Nakayama Miki, founder of Tenrikyō, or Deguchi Nao, founder of Ōmotokyō (Thomsen 1963: 34, 128), although the growth and organisation of the religions were usually accomplished through the 'bureaucratising' or organising activities of a man (2). More recently Kitamura Sayo has founded the so-called 'Dancing Religion' in Yamaguchi prefecture (ibid., pp 199-200; McFarland 1967: 66-7, 73-4; Saunders 1964: 276-7). Though new religions were founded by men, many of them in fact developed out of the teachings or practices of Tenrikyō or Ōmotokyō (cf. Thomsen 1963), the principal exceptions being the Nichiren group (including the Sōka Gakkai and Reiyūkai), though even one of these, the Risshō Kōsei-kai, had a woman as one of its two co-founders (ibid., p p. 117-8; Dale 1975: 24-5).

Within many of these new religions, moreover, the majority of adherents appear to be women. Official statistics released by these organisations do not normally analyse the membership figures by sex, especially as they often count the membership in terms of households (on an assumption, it seems, that if one member of the household belongs to the religion then the others will also (eventually) belong: cf. Ikado 1968: 102; White 1970:57; McFarland 1967: 5). However, sociological or anthropological studies of these sects seem unanimous in pointing out the preponderence of women among the ordinary membership, even if the leadership tends to be dominated by men: such a phenomenon has been noted for the Sōka Gakkai: (White 1970: 62), Risshō Kōsei-Kai (Dale 1975: 53-4), Mahikari (Davis 1980: 161, 245) and the 'Salvation Cult' studied by Lebra (1976: 235);

(2) In these names the surname is put first, in accordance with Japanese practice.

Norbeck (1970: 40) writes that of the principal new religions 'Seichō - No - Ie probably has the largest proportion of female members'.

Not only are many of the members female, but the majority of the male members of the new religions came, at least initially, from smaller firms and 'lower middle class' families with relatively less secure incomes as compared to the 'salaryman' class, although those attaining positions of leadership in the new religions tended to be from an 'upper middle class' minority in these organisations and more recently some of the younger members have also joined the 'salaryman' group (3): cf. Norbeck (1970: 24, 37-9), Ikado (1968: 107-8, 113), Agency For Cultural Affairs (1972: 91-2) and the case studies referred to above. Norbeck (1970: 37) summarises the membership of the 'new religions' as follows:

> 'These are drawn chiefly from the lower and lower middle social strata of Japanese society, the social classes with the least formal education and those who, while not impoverished, generally lack high incomes..... A survey.... shows... a high incidence of members of the urban laboring classes. A Japanese scholar describes the membership of the new sects as consisting chiefly of small business and shop owners, unorganised labour, poor and unfortunate farmers and fishermen, impoverished middle aged people with poor prospects, and women'.

Therefore the membership of such religions is recruited not so much through common employment in large firms such as Nissei but rather through informal networks of friendships (tsukiai) of the kind described by Dore (1958: 255, 259, 262) which can often involve socially contracted obligations (giri).

(3) However, neither of the two Sōka Gakkai men in the Nissei shataku had university education and so were unlikely to rise high in the firm. At least one of these was a second-generation convert, who became a member partly on account of family pressures or influence.

There are many motivations for joining new religious groups, among them a search for the 'security' of belonging to a larger organisation and in this sense tsukiai may continue to be important as a means to security (of a kind) despite an expansion of social services and of private saving (4).
Other motivations include financial, health, marital or other problems, which the new religions promise to solve in the 'here and now', such problems perhaps being more concentrated among the lower social strata who have fewer resources with which to deal with their various anxieties (fuan): cf. Thomsen (1963: 22-4) Norbeck (1970: 38).

Although the wives of some employees in large firms like Nissei may join some of the new relgions, the men, if they claim to have a religion at all, are more likely to belong to one of the more traditional, orthodox sects of Buddhism for their family ancestral rites and to participate in a few Shinto "customs" such as New Year shrine visits or the possession of safety charms. Theirs is the religion of orthodoxy and conservatism. They are also the elite of salaried 'permanent employees' (or at least some of them are) in firms like Nissei. Women tend not to rise very high in these firms because of an expectancy that they will leave the firm at marriage (Rohlen 1974: 20, 78-9; Cole 1971: 147-8), with the result that such firms are 'run by older men, and it is a universal opinion among them that married women belong in the home' (Rohlen 1974: 78).

(4) Dore (1958: 259) suggested that these factors are likely to erode the importance of tsukiai.

It is also these older men who take part in company religious rites at Nissei (to be described in Chapter 12), which involve the hiring of Shinto and Buddhist priests from local shrines or temples which are almost always those of 'orthodox' religions rather than of the newer Shinto or Buddhist denominations, although the Sōka Gakkai link with Nichiren Shōshū (dating from the 13th century) does blur this denominational distinction to some extent. Nevertheless, in general terms there does appear to be a consistant paradigm in which a 'dual structure' in religious affiliation and involvements is linked to the 'dual structure' of the economy - and perhaps also, it might be suggested, to the differences between the 'group model' of Japanese society advocated by Nakane (1970) and the 'social exchange' model suggested by Befu (1980). As in Fig.10.1, this more 'modern' paradigm is also linked to differences in the expected or normative roles of men and women:

Fig.10.2: Male and Female economic roles and religious affiliations

	Mainly Male	Mainly Female
Economic Status:	Large firm ('permanent employee')	Small company or none
Social affiliations:	'Group'	Tsukiai
Religious Membership:	Orthodox Shinto or Buddhism	New Religions

It can be noted in passing that whether a person derives 'security' from belonging to a large economic organisation or to a large religious organisation such as the Sōka Gakkai, in both cases there is a 'security in numbers' involved.

Moreover, the two 'types' in the above paradigm are models which can merge into one another in practice, in so far as tsukiai - like relationships can develop in a large firm such as Nissei and some economic benefits can also come from membership of the new religions, as illustrated by the Aoyama man who is the manager of a small garage and car repair workshop and whose clientele is derived in part from his Sōka Gakkai network of acquaintances.

To some extent this division between the 'economic security' and 'orthodox religion' of the large firms and the 'tsukiai - based security' and 'unorthodox' (or 'less orthodox') religion of those in smaller firms or none (such as housewives) is analogous to the difference noted in chapter 7 regarding eldest sons and younger sons: the former tend to choose 'orthodox' modes of religious expression and to have some 'economic security' through inheritance (at least to some extent) whereas the latter are less 'secure' in a predetermined economic mould and tend to be influenced by 'less orthodox' modes of religious expression. This parallelism between what are two complementary modes of religious expression in each case also extends to a parallelism whereby both younger sons and women tend to practise divination to a greater extent than elder sons and men respectively. As shown in chapter 6, many young women consult fortune-tellers prior to marriage as a means of trying to obtain some external guidance or reassurance for decisions involving marriage, and it appears that the increased incidence of practice among women also predisposes to some increased profession of 'belief' in fortune-telling as compared with men.

The relevant statistics are presented in tables 10.1 and 10.2:

Table 10.1

Male/Female differences in the consultation of fortune-tellers

Question: 'Have you ever....?'	% Males	% Females	Number of respondents to question
a) Drawn a *mikuji*	86.5%	92.9%	651
b) 'Done astrology'	20.7%	40.7%	594
c) Consulted a palmist	24.7%	40.3%	601
d) Consulted '*Kokkuri-san*'	2.5%	6.4%	578
e) Consulted a medium	1.4%	3.7%	576
f) Consulted a *seimei-handan* specialist	18.8%	32.5%	604
g) Read your horoscope	50.4%	72.2%	618

Table 10.2

Male/Female differences in professed beliefs in the influence of fortune-telling related variables

Qustion (1):

'Do you think any of the following indicate one's personality?'

	% Males	% Females	Number of respondents
a) One's name	9.6%	15.5%	659
b) The position of the stars at birth	8.4%	13.5%	659
c) Fate	27.3%	36.4%	660
d) Blood groups	36.6%	42.5%	659
e) The lines one one's palm	9.6%	16.5%	655

Question (2):

'Do you think any of the following influence the fortunes in life of yourself and your children?'

	% Male	% Females	Number of respondents
a) Fate	27.1%	35.4%	614
b) The arrangement of the stars	5.5%	8.1%	614
c) The lines on one's palm	5.0%	9.3%	616

As shown in chapter 7, there is some relationship between professed belief in the influence of these fortune-telling variables and possession of a Kamidana or (for Fate) a Butsudan. To a certain extent this relationship may be derived from, or at least connected with, the fact that it is often the women who are responsible for such domestic rites. In households containing both a Butsudan and a Kamidana it is normally the same person or persons responsible for the upkeep of both types of worship. A co-residential grandparent is usually the one responsible for these cults in 3-generational households, but in others it is normally the wife who performs the rites except in unusual cases such as that of Mr. Maruyama (detailed in chapter 3). Often informants say that the upkeep of the Butsudan or Kamidana is "part of the woman's duties", or attribute the difference in religious participation to different expected roles, although a number of men say they ought to participate in the cult more but say they do not have enough time for it. Tabulating the questionnaire replies regarding the person responsible for such domestic cults, the female involvement is seen quite clearly:

see over for Table 10.3:

Table 10.3:

Responsibility for Butsudan or Kamidana Rites

Person	Number of cases	Percentage (denominator = 252)
Wife	221	87.7%
Husband's Mother	63	25.0%
Wife's Mother	15	5.9%
Husband	125	49.6%
Husband's Father	22	8.7%
Wife's Father	4	1.6%
Other	29	11.5%

(Since respondents within a household do not always give consistent replies, all respondents with a Butsudan or Kamidana are included in these statistics; because there is no noticeable difference between those responsible for Kamidanas and those responsible for Butsudans (100 and 90 cases respectively), and in the 62 cases with both types of altars the same person is responsible for both, no distinction has been made between Kamidana and Butsudan rites in the above table).

Table 10.3 indicates also a male/female difference in the elder generation which reflects the fact that in the whole sample there are 37 households containing an elderly mother and 10 an elderly father, but this ratio is far higher than that which would be expected from the general life expectancies of men and women, which stand at 74 and 78 years respectively (according to figures cited by Wöss 1982:5). Generally elderly couples prefer to live by themselves if still able to do so but to live with kin when widowed or incapacitated, largely because elderly women have a fear of becoming dependent on the services of a daughter-in-law in the eventuality of becoming bedridden (ibid., pp. 4-8). Such a fear may, at least in part, account for a reluctance to live with a child's family until forced to do so by financial conditions following the death of a husband, by ill health or by an even greater reluctance to live alone. This therefore produces the demographic pattern noted for the 3-generational households in Aoyama and the pattern of responsibility for rites noted among the older generations in table 10.3. However, to some extent the female participation in old age is also a continuation of patterns initiated in middle age or earlier if a couple assume responsibility for a Butsudan and the rites are left for the wife to perform if the husband considers himself "too busy" to do them most days of the week. This relationship between the amount of time spent at work and responsibility for rites, if the rites are conducted on a daily basis, is borne out by the figures in table 10.4:

Table 10.4 Hours of work and daily rite performance

Key:

Group A = Females with a Butsudan; wife responsible for rites.
Group B = Males with a Butsudan; husband responsible for rites.
Group C = Females with a Kamidana; wife responsible for rites.
Group D = Males with a Kamidana; husband responsible for rites.

1) Butsudan worship

Hours of work (weekly)	Daily morning rite		Daily evening rite	
	Group A	Group B	Group A	Group B
(5)				
0-30 hours	18	3	16	3
31-40 "	1	1	2	0
41-50 "	3	7	2	6
51-60 "	4	5	0	5
Over 60 "	2	1	2	0
Totals:	28	17	22	14

2) Kamidana worship

Hours of work (weekly)	Daily morning rite		Daily evening rite	
	Group C	Group D	Group C	Group D
(5)				
0-30 hours	14	4	6	2
31-40 "	1	1	1	0
41-50 "	2	9	2	4
51-60 "	2	4	1	4
Over 60 "	2	0	1	0
Totals:	21	18	11	10

---

(5) Includes those who did not report their hours of work, which for women usually indicated their being housewives with no outside employment. The figures for those who left hours of work unreported are:

Morning rites: Group A = 14, B = 2, C = 8, D = 2.
Evening rites: Group A = 11, B = 2, C = 3, D = 1.

The much larger figures for unreported work hours in groups A and C confirm that these are housewives at home with no paid employment.

These figures do show a significant difference between Butsudan and Kamidana participation by males and females. Generally more women than men practise Butsudan rites daily, but the figures are almost the same for each sex when Kamidana rites are considered. The greater male participation in daily Kamidana rites seems to be partly attributable to their prayers for healing or of thanksgiving for a child (as detailed in chapter 9), but these cases are unlikely to bring up the numbers to this extent even if there were several other such men among those not interviewed. There may be some influence from the association between Kamidana possession and home ownership if the rites are seen as symbolic of having attained the status of 'house owner', or as ensuring the gods' protection of the house, but it seems unlikely that such a feeling would be long sustained by most businessmen. A much more significant explanation is rooted in the economic circumstances of these men, in that some of them are self-employed such as the Aoyama shopkeeper (who has both a Kamidana and Butsudan) and their livelihoods are less secure than those of most 'salarymen'. Shopkeepers have a reputation for being "more religious", according to some Ueno informants, and this is borne out by the practices of the Aoyama shopkeeper, who prays daily at both household altars despite a working week of 84 hours, and on the first weekend of every month visits the Iwadani shrine to pray for "general matters", including economic affairs. The lack of long-term economic security in such businesses, especially when threatened by the opening up of a new supermarket or other types of competition, may motivate people to become 'more religious' than others.

This is therefore a further manifestation of the 'safety and security' motivation, and accounts for the greater proportion of men who pray daily at their Kamidanas despite long working weeks.

Nevertheless, there still remains a tendency for women to pray more often at both Kamidanas and, especially, Butsudans, and for such rites to be performed by those women who have fewer work hours in a week. The exceptions are those like the shopkeeper's wife who do work long hours but also make time to pray, for reasons generally the same as those of their husbands. Therefore the structure of work and of male/female roles in different types of businesses largely determines the kinds of people who pray daily at Butsudans or Kamidanas and produces a tendency for such worship to be performed more by women than men. Such a pattern is consistent with the 'dual structure' outlined in Fig.10.2 whereby male employees in large firms tend to leave the performance of household rites to their wives, for the most part, whereas men in less secure, smaller firms participate in such rites relatively frequently along with their wives.

Religious affiliations

It is one of the conclusions of the present work that professed religious affiliations mean very little in real terms, because the same kinds of motivations and behaviour are found among those claiming no religious affiliation as among those making such claims. This conclusion has been implicit in many of the statistics already presented, since the possession of safety charms or consultation of mikujis, for example, far exceeds the numbers of those who claim to have a religion at all. There is, of course, some variation by religious affiliation, particularly for Christians and Sōka Gakkai adherents, but these are a minority. When percentages are taken among those who claim to have a religion, the correlation between affiliation and various practices seems very high, so that, for example, 65.5% of the 29 Shintoists have a Kamidana but only 5.3% of the 38 Christians in the sample. However, if practice is taken as the principal index and claimed affiliation as secondary, such differences seem relatively minor, as illustrated by table 10.5:

See over for Table 10.5

Table 10.5 Claimed religious affiliations, or none [6], correlated with various religious practices

	Shintoists (N. = 29)	Buddhists (N. = 104)	Christians (N. = 38)	Non-Religious (N. = 491)
Possession of a Kamidana (N. = 162)	19 = 11.7%	29 = 17.9%	2 = 1.2%	111 = 68.5%
Possession of a Butsudan (N. = 152)	8 = 5.3%	52 = 34.2%	4 = 2.6%	88 = 57.9%
Possession of a *mamori* (N. = 431)	16 = 3.7%	64 = 14.8%	20 = 4.6%	328 = 76.1%
Having drawn a *mikuji* (N. = 579)	25 = 4.3%	90 = 15.5%	26 = 4.5%	435 = 75.1%
Having 'done astrology' (N. = 168)	7 = 4.2%	24 = 14.3%	10 = 6.0%	126 = 75.0%
Having consulted a palmist (N. = 185)	13 = 7.0%	27 = 14.6%	10 = 5.4%	135 = 73.0%
Having consulted a *seimeihandan* specialist (N. = 146)	12 = 8.2%	28 = 19.2%	2 = 1.4%	103 = 70.5%
Having 'prayed by oneself' [7] (N. = 349)	24 = 6.9%	60 = 17.2%	33 = 9.5%	230 = 65.9%
New Year shrine visit in 1981 (N. = 510)	22 = 4.3%	84 = 16.5%	14 = 2.7%	386 = 75.7%
Grave visit at Bon in 1981 (N. = 410)	18 = 4.4%	72 = 17.6%	16 = 3.9%	302 = 73.7%
Pay attention to *yakudoshis* (N. = 322)	14 = 4.3%	56 = 17.4%	12 = 3.7%	237 = 73.6%

(6) The 5 who claim to belong to 'another religion' (i.e. one of the 'new religions' such as Tenrikyō) are omitted from the table but their practices can be deduced where the numbers or percentages do not add up to the total given or to 100%.

(7) i.e. at a special time of crisis instead of as a regular habit.

It is clear from these figures that for most practices the distribution is about what might be expected knowing that Shintoists constitute 4.3%, Buddhists 15.6%, Christians 5.7% and the non-religious 73.6% of the total sample. The marked exceptions are the expected findings that a higher than proportional number of those with a Kamidana call themselves Shintoists and likewise for those with a Butsudan who classify themselves as Buddhists. Other noticeable associations are that a higher than proportionate number of Christians pray by themselves (at times of crisis etc.,), fewer consult seimeihandan specialists but that more Shintoists do so. These are also what might be expected knowing that many seimeihandan specialists are Shinto priests and that impromptu prayer is more commonly found in Christian than Shinto or Buddhist worship (8). There is therefore little association between practice and claimed religious affiliation beyond what might be expected from fairly obvious connections such as those relating to types of household altars, the overall distribution of practices among those claiming to have a religion being approximately proportional to the overall distribution of these groups.

What is much more significant, however, is the distribution of these claimed religious affiliations by sex. This is shown on table 10.6. (see over)

(8) Most of those who said they had 'prayed by themselves' in a Shinto or Buddhist context had in fact been referring to prayers before a Butsudan or Kamidana at 'times of distress' or 'times of joy', as given in the categories for occasions of worship in chapter 3.

Table 10.6

Sexual distribution of claimed religious affiliations

	Shintoists	Buddhists	Christians	Others	Non-religious
MEN (N.=409)	16 = 3.9%	65 = 15.9%	12 = 2.9%	5 = 1.2%	311 = 76.0%
WOMEN (N.=258)	13 = 5.0%	39 = 15.1%	26 =10.1%	0 = 0%	180 = 69.8%

The most noticeable feature of these figures is that the overwhelming majority of Christians are women and that this largely accounts for the lower proportion of 'non-religious' women. It is also noticeable that all those in the 'other religions' category happen to be men, but the numbers are too small to offer any explanation for this except that it is probably on account of the predominance of men in the Sakurano sample : 4 of these 5 men live there, and it is not unlikely that if their wives had filled in a questionnaire most of them would have claimed to belong to the same religion as their husbands.

It is the concentration of Christians among women rather than men which requires some further discussion, however. The category 'Christian' here includes those who belong to both Catholic and Protestant churches as well as those who have no active church involvements. It is therefore a wide, generic term analogous to Nichiren Buddhism which includes the Sōka Gakkai, Reiyūkai, Risshō Kōsei-kai and other groups (cf. Agency for Cultural Affairs 1972: 205-212), but these Nichiren Buddhist groups do not stand out as a distinct entity in the statistics because they merge into a wider collectivity of 'Buddhists'.

The Christians are more noticeable as a distinct group, and among them the majority (68%) are women; put another way, Christians account for less than 6% of the total sample but for just over 10% of the women represented in it.

This phenomenon is partly to be explained by the more general tendency for women to be involved in the 'new religions', but for some of them to be converted to Christianity instead of a 'new religion'. Comparable statistics on the proportions of women in the 'new religions', where available, range from 58% in the Sōka Gakkai [9] to 62% in Mahikari (Davis 1980: 161) and as high as 66% in the 'Salvation Cult' studied by Lebra (1976: 235), in which 80% or more of the 'active members' are women. Therefore the high proportion of women among the Christians is consistent with the high female proportion in various 'new religions'.

However, there are also a number of other factors which may predispose women to a greater interest in, or contact with, Christianity, some of which are as follows:

see over.....

(9) This percentage is the mean of 9 nationwide surveys conducted between 1963 and 1967, cited by White (1970: 62). In these samples as a whole the mean proportions were 51% women versus 49% men, but among the Sōka Gakkai members women accounted for 58%.

i) Most of those who claim to be Christians trace their allegiance to their having attended a Christian school or university. Many of these have a high female intake, especially the older-established colleges and universities which were at one time virtually the only institutions of higher education for women in Japan and have often retained a high academic reputation. The first school for girls was opened in 1870 and from then until about the turn of the century, when the government began to promote schools for women, 'the history of education for women in Japan' was 'almost identical with the history of the Christian schools for girls. In 1905, Christian high schools for girls represented 70 per cent of the total number of girls schools' (Bunce 1955: 158). The proportion has continued to drop since then, to less than 5% by 1930 (ibid.), but some such as Dōshisha University in Kyoto have continued to have a high academic reputation. Some women who have had more contact with Christianity than with any other religion might therefore call themselves 'Christian' on a questionnaire even if they have no formal church membership or other indications of a Christian faith.

ii) It may be that a contact with Christian education has predisposed some women to seek help from Christian pastors in times of domestic crisis or other personal problems. As indicated in table 10.7, the male/female proportions are almost identical regarding the consultation of Shinto or Buddhist priests, and when interviewed about these most informants said their reasons for consultation were largely for arranging weddings or funerals.

Those who had consulted a Christian pastor or missionary, however, had sometimes done so regarding domestic or marital crises such as a child's truancy or a husband's hours of work or suspected infidelity. Largely this is because the Christian pastor or missionary is seen to be outside the social networks of gossip, is someone whose advice and confidence is trusted or respected, and is sometimes thought to give more practical advice than that which might be offered by other religious specialists.(10)

Table 10.7.

Consultation of priests, pastors or missionaries

		Men	Women
(a)	Buddhist priest	20 = 5.6%	11 = 5.0%
(b)	Shinto priest	9 = 2.5%	6 = 2.8%
(c)	Christian pastor or missionary	8 = 2.2%	13 = 6.1%

(Number of male respondents = 359 for (a) and (b), 358 for (c)
Number of female " = 218 for (a) 216 (b), 213 for (c)
The increased number of forms left blank for (c) might indicate some reluctance to mention this by some people).

iii) A common method by which missionaries gain contacts is through English classes, which often attract middle-class women as a leisure activity. On a general level, missionaries have relatively fewer contacts with men, who are involved with their work for most of their time and have less interest in cultivating contacts in their leisure time with Christian evangelists or pastors.

(10) The head priest of the Ueno jingū claimed that he "often" has people consult him "about all sorts of things" but was no more specific about what kind of matters. Judging by the reasons for consulting a Shinto priest given by those interviewed in Aoyama and Sakurano the occasions most common for such discussions concern rites - weddings or miyamairi, the siting of a house (re kimon etc.,) the naming of children by seimeihandan and similar matters.

iv) Unlike many of the new religions which have spread initially among 'lower middle' and 'working' class men and women, Christianity has generally concentrated on the 'upper middle class' intelligensia (Agency for Cultural Affairs 1972: 79-81; Dale 1975: 184-6), through methods such as schools, English classes and similar 'educational' approaches.(11) Typically the men in such classes tend to join either large corporations such as Nissei or government bureaucracies. In the executive stream of the firms they are likely to be moved often from one place to another. Unless they have a church of their own denomination in the new area to which they have a formal introduction they are not always likely to seek out a church of a different denomination. Particularistic loyalties to the micro-group can sometimes take precedence over generalised loyalties to the macro-group despite all owing loyalty to Christ as the 'Head of the Body'. (12) In such circumstances men may drop out of church involvements but their wives, seeking a network of friends in a new environment, may instead actively seek out a church of some sort. Male networks in the sphere of work can sometimes take priority over other networks in the sphere of church and leisure.

(11) The Roman Catholic working-class descendants of the 'hidden Christians' of northern Kyushu who preserved some aspects of their faith during the Tokugawa persecution of Christianity and exclusion of foreigners constitute an exception to this tendency (Agency for Cultural Affairs 1972: 79).

(12) Ephesians 4: 15-16

v) Whereas the Sōka Gakkai is a lay Buddhist sect linked to the older Nichiren Shōshū denomination, and the Risshō Kōsei-kai provides opportunities for lay leadership in its Hōza sessions (Dale 1975: 65), there remains a tendency in many Christian churches to develop a 'one man band' kind of leadership focussed on the pastor or missionary. It might be that a lack of opportunities to take responsibilities for organising or leading church activities may discourage some Japanese men from active involvement in the Christian churches. Such a feeling may become manifest if the pastor or missionary leaves or goes on furlough, because men who might have stepped into some kind of a leadership role cease attending the church. It is apparently not uncommon for a congregation's membership to drop considerably after a missionary leaves to go on furlough, and those who do remain loyal to the church are often the women.

Male and Female Differences in Beliefs

If, as has been indicated, women have a higher propensity to practice various types of fortune-telling or are more likely than men to look after household rites, it is likely that such a tendency will also affect their professed beliefs (cf. Southwold 1983: 47-8, 134-6). Such a tendency is in fact to be found in the data, as indicated in Table 10.8.

see over.....

Table 10.8. Miscellaneous beliefs and attitudes correlated with sexual differences

1) 'If you were to do something bad, do you think divine punishment would befall you?'

	Yes	No	Don't know
Men (N. = 404)	200 = 49.5%	89 = 22.0%	115 = 28.5%
Women (N. = 252)	161 = 63.9%	34 = 13.5%	57 = 22.6%

2) Do you pay attention to:

a) Taian, Butsumetsu, Tomobiki etc?:

Men (N. = 405)	142 = 35.1%	164 = 40.5%	99 = 24.4%
Women (N. = 257)	107 = 41.6%	79 = 30.7%	71 = 27.6%

b) Yakudoshis?

Men (N. = 408)	180 = 44.1%	159 = 39.0%	69 = 16.9%
Women (N. = 256)	142 = 55.5%	68 = 26.6%	46 = 18.0%

3) 'As Science progresses, do you think it will explain all mysterious things?'

	Yes	No	Don't know
Men (N. = 405)	55 = 13.6%	286 = 70.6%	64 = 15.8%
Women (N. = 251)	22 = 8.8%	181 = 72.1%	48 = 19.1%

4) 'Do you think divination is something just for fun?'

Men (N. = 402)	202 = 50.2%	56 = 13.9%	144 = 35.8%
Women (N. = 253)	152 = 60.1%	27 = 10.7%	74 = 29.2%

Table cont.....

5) Do you believe in the existence of:

		Men	Women
a)	A Being above man and nature	59.9%	68.7%
b)	A spirit within man and nature	33.8%	43.6%
c)	A spirit within each person	51.9%	64.1%
d)	A personal spirit which survives death	28.6%	40.2%
e)	A life after death (literally: 'a post-death world')	18.4%	29.3%
f)	U.F.O. s	33.3%	19.0%

(For the sake of space, 'Yes' answers only are tabulated. Male respondents range from 397 to 402; Female respondents range from 249 to 252.)

A few of these miscellaneous attitudes are explicable by reference to the occurrence of these phenomena in the life-cycle: yakudoshis occur earlier for women than men, so it is to be expected that more women will claim to pay attention to them; women are often more involved in the organisation and arrangements for a wedding or funeral so are more likely to consult taian, tomobikis etc., They also consult divination more often, but the public rationalisation for such behaviour is that it is 'just for fun'. It may well be a fact 'just for fun', but the fact that more women than men do it, and at the crucial stage in their lives just prior to marriage, suggests there is more to it than the surface rationalisation. All these are statistics easily understandable by reference to stages in the life-cycle even if those stages occur relatively rarely.

At such points one does discuss Yakudoshis or Taians, if only with one's family or friends, and some sort of opinion may be formed. However, the other attitudes and professed beliefs are more rarely discussed and are not directly linked to stages in the life-cycle, except insofar as questions about a life after death may cross one's mind at a funeral, so it is much more difficult to explain these by reference to social circumstances.

These remaining 'unexplained' differences fall into two categories. Firstly, proportionately more men than women adopt the relatively materialistic viewpoint that ultimately everything is explicable by 'science', and their professed belief in U.F.O.s fits with their 'scientific' frame of mind because U.F.O.s appear to be more 'rational' or 'scientific' by their associations with science-fiction and either science or pseudo-science, as compared with traditional religious beliefs which are considered to be less compatible with 'science'.

The second category of beliefs consists of those which are relatively vague and nebulous but which are found in most, if not all, religious systems of the world - beliefs in some kind of supreme being or gods 'above man and nature', animistic-type beliefs in spirits within nature and man (as in Shinto), beliefs in an afterlife, a personal soul or spirit, and some kind of divine punishment for 'bad' ethical conduct.

Such beliefs in various forms form a ground-bass for most religious systems of the world, even if a selection from among these elements is found in any particular system. All these are beliefs professed more by women than men. However, the specific manifestation or understanding of a concept like bachi is considerably different according to individuals. The main attitudes to it among 34 people questioned are:

i) Manifested as injury or illness as a result of neglecting the ancestors: 5 people.

ii) Injury or illness as a result of more generalised bad conduct: 5 people.

iii) Definite cause and effect in human relationships (e.g. 'if you betray someone you yourself will be betrayed'): 8 people.

iv) One has a guilty feeling [13] or psychological suffering: 7 people.

v) Mainly a threat to children so they behave: 3 people. (One of whom also saw it partly in terms of category (ii).)

vi) 'Don't know'; 'the form of it is unpredictable': 2 people.

vii) Others: 4 people.

These consist of:

a) A woman with 3 daughters and no sons who considers herself 'not overblessed', but does not go so far as to call it bachi because that would attribute guilt or responsibility to herself.

b) A woman influenced by the Jehovah's Witnesses who sees death and judgement as forms of divine punishment, but, contrary to attitudes (i) and (ii) above, does not see injuries or lost property as forms of bachi.

(13) One man expressed this as "a feeling of not being forgiven".

c) A woman whose father-in-law's cousin lives in a village outside Ueno and lives with his father's sister's daughter without being married to her, a relationship locally regarded as incestuous if not legally so. The couple's first child died in infancy, the second is mentally deficient and the third is normal, but the villagers and some of the family regard these misfortunes as bachi. (14). The man is also regarded by the villagers as being possessed by the spirit of Ryūjin, the dragon god, from whom he claims to have various visions and revelations.

d) The attitude of Mr. Fukasawa who bought a mamori in defiance of Sōka Gakkai teachings against it and whose car turned over on the way back from the shrine after he had gone no more than 10 kilometres.

Although the attitudes towards bachi are so varied, those towards 'a Being above man and nature' are more constant. To some extent all the ideas of bachi are linked to the idea of a supreme moral order in the universe, whether seen in material terms - e.g. "if a man is a thief he becomes poor" - or spiritual terms of judgement in an after-life, and so the concept of bachi needs to be seen in the context of beliefs in a 'Being above man and nature' which might be held responsible for upholding that moral order. When asked why they profess such a belief in 'a Being above man and nature', answers were of four main kinds:

see over.....

(14) These attitudes are consistent with that of Mrs. Takeda, from another village outside Ueno, who said that "bad things happen to one's children", as a result of bachi. She herself has a distant genealogical relationship with her husband but does not know the exact details, and had been unable to have children until after 11 years of marriage.

1) An ontological argument that "there are many things we cannot do", or "many things man does not know" - and therefore "nature is so great there must be a God", as one informent put it explicitly. Most left the conclusion implicit, saying that there are "many things science can not explain" or referring to man's limited power or knowledge. Such answers were given by 33 (61%) of the 54 people questioned on this topic, and it is a more emotional and intuitive approach than the teleological argument mentioned by only 4 people, 3 of whom also mentioned this ontological argument. (15)

2) Teleological references to natural scientific laws and the cycle of nature which are inductively used to reason that there must be a Creator. Examples of these include references to the constant revolution of the planets, the annual cycle of flowers and plant life, each blossoming in its own turn, and a more general ontological/teleological comment that "there must be something to keep things going".

3) An awareness of a "greater power" governing and directing one's experiences in life. Some referred to "miracles" in their lives, the two men suffering from ill health saying it is "a miracle that I exist" and "my own existence depends on Kamisama".

3) cont.....

(15) These 3 were all women.

3) cont/.....

One woman mentioned a premonitory dream regarding her mother's death and another referred to the birth of children as a miracle, this being Mrs. Takeda who had to wait 11 years for her first child; others were more vague about "unexplained mysteries because God looks after you, so that wonderful things often happen". Two shataku men referred to experiences which they could not have planned for themselves, one of them attributing the way he had been moved around by the company to the workings of a "greater power" which he identified with Fate. A few others referred to jinxes and omens as evidence of a greater power, these being mainly shataku workers in the blue-collar or foreman class.(16)

4) By reference to the authority of Scriptures (whether Christian or Sōka Gakkai) or books on religious education: four men and one woman gave this reply. A Christian man also gave an answer which is obviously influenced by his Christianity but does not fit into the above categories, namely "All people feel a need for moral absolutes".

(16) Examples of such jinxes or omens are:

a) The man who first met his wife at the funeral of a common ancestor, and whose go-between said it was a 'jinx'.

b) A man who says that if he breaks a cup early in the morning he feels all day that something else will go wrong at work so he takes special care to avoid injuries.

c) A man who said that if things go badly at work one day he avoids drinking the same kind of green tea again in the morning, but if things go well he drinks the same kind of tea again the next morning.

To some extent these categories overlap, in that some people mentioned one initially and then another as an afterthought, although there is a hint in the data that the 'ontological' approach tends to be favoured by women (being mentioned by 73% of the 30 women versus 46% of the 24 men) whereas the argument from experience seems to be favoured a little more by men, (being mentioned by 29% of the men but only 13% of the women). However, the statistical sample is too small to draw meaningful inferences from this, but whether or not there is any significant difference in this regard might provide an interesting line of research in the future.(17) Neverthless the overall tendency for women to express or profess a greater degree of 'belief' in these various items on the questionnaire does seem to link in with their relatively higher degree of religious practice. The degree of practice in itself is partly explicable by reference to the greater female involvement in the 'new religions' and Christianity as well as in less formalised religious behaviour such as fortune-telling. To some extent these practices are a reflection also of the amount of leisure time available to women as compared to men: this will form the focus of chapter 11.

(17) If there is such a tendency, it might be explained in a number of ways, and any future investigation of such differences would need to investigate also differences between the sexes in areas such as socialisation, social roles, perceptions of life, attitudes to authority, exposure to scientific modes of analysis and many other factors.

CHAPTER 11

LEISURE

To a large extent the greater female involvement in the 'new religions' and in Christian churches is attributable to their increased amount of leisure time as compared with men, especially among housewives whose children are at school. Members of the new religions 'are often described as predominantly middle aged and female' (Norbeck 1970: 39), a phenomenon related to the fact that these women have relatively more time on their hands which can be utilised in a variety of ways. A few can return to work, but employment opportunities for such women are relatively limited (cf. Rohlen 1974: 78 and footnote 14; Cole 1971: 147-8). Others become involved in sports, tennis being a popular one among women in the Nissei shataku, some take up hobbies such as amateur pottery, flower arranging, learning English or other foreign languages, or, less commonly, crafts such as leatherwork or fancy knitting. A minority may become involved in 'political' or 'quasi-political' organisations such as the group described in chapter 5 which tried to lobby the town hall about its waste disposal methods, while another minority may become involved in religious organisations. These middle-class, middle-aged women form a 'floating' group in Japanese society who have more time available for such activities(1) and may take up one or another of these hobbies, sports or interests according to individual tastes and

(1) Statistics on the amount of time informants spend doing sport, watching television, talking with friends or doing jobs around the home etc. are available on the computer tape at the National Museum of Ethnology.

circumstances. Even if only on the basis of statistical random selection, it can be assumed that at least some will choose a 'religious' type of activity but others a 'non-religious' one while the various organisations compete among one another for 'customers'.

However, the choices are by no means exclusive, and often some 'religious' involvements are combined with 'non-religious' hobbies in the allocation of time of any particular individual. Among those who are not committed to a particular religious organisation such as one of the 'new religions' or a Christian church, the 'religious' involvements, such as going to watch a Shinto festival (matsuri), are often classed as 'recreation' rather than 'religion', which is why they will be discussed together in the same chapter. However, it should be pointed out at the beginning that this 'emic' view of such activities as 'non-religious' or as 'recreation' (asobi) does not necessarily correspond with an 'etic' classification in terms of 'religious' versus 'non-religious' acts. The same behaviour is usually manifested by the person who goes to a shrine or temple to 'worship' (o-mairi suru) and the one who goes for 'sightseeing' (kankō or kenbutsu) in that both normally put their hands together and pray when they arrive: the different attitudes or motives are partly a result of a different context (such as New Year versus other times) and partly of a different quality of 'belief' (in terms of a distinction along the lines of 'active' versus 'passive' belief) in so far as the former has an 'intention' to pray or worship but the latter does not, even if the latter does manifest the same behaviour as the former on arrival at a shrine. The behaviour remains

constant but the attitudes differ. Usually it is a majority who display a 'passive' belief in the 'religious' side of the activity and these tend to see it in terms of a 'custom' rather than as a 'religious' act, but the behaviour remains the same as for the minority who view it as 'religious'. In this way the proliferation of Japanese words for 'custom' (e.g. kanrei, shūkan, kanshū, shikitari, narawashi) and related ideas such as 'tradition' (dentō, iitsutae) reflects a widespread, and probably long-established, attitude which places emphasis on the preservation of old 'customs' which are seen by some to be part of the sphere of 'religion' and by others to be 'recreation'. Such an attitude is probably consistent with the degree to which Japanese society still attaches importance to the 'past', as seen in diary-keeping or ancestral rites, as compared perhaps to some pastoral societies in which graves are left unmarked and the past seems to be quickly forgotten(2).

Visits to shrines and temples

One of the areas in which this overlap between 'religion' and 'recreation' is most clearly seen is in attitudes to shrine or temple visits. Attitudes to New Year visits have been reported already in chapter 5, and here it is sufficient to highlight one of those attitudes, that of "sightseeing". It is important in this context to point out a significant lexical and semantic difference between the verb mairu, used to express intention of worshipping or praying (as for a

(2) I am grateful to Dr. David Turton for this observation and for his comments on contrasts between the Japanese and the Mursi.

yakudoshi or New Year shrine visit) and the more general verb for 'to go' (iku) which is used to refer to shrine or temple visits when the purpose is "sightseeing". This difference is reflected also in the replies to a question, modelled on one asked by Dore (1958: 301), which asked how many times informants had visited shrines or temples in the previous year. Few distinguished between Shinto shrines and Buddhist temples in their replies, some of these being unsure if a particular institution were a Shinto or Buddhist one, and the majority gave aggregate totals for shrines and temples which ranged from once (New Year only) to four or five times. However, if asked more specifically about visits for the purpose of "sightseeing", these same informants would usually add to their original replies to give answers ranging from "3 to 5" and "5 or 6" to "many times". The former visits are in the realm of 'religion' and the latter in that of 'recreation', but most of those who go for "sightseeing" purposes also pray in a manner which is outwardly indistinguishable from their visits for a 'religious' purpose: at a Shinto shrine they ring a bell (variously interpreted as "summoning" or "waking up" the god, or "announcing one's presence"), bow twice, clap their hands twice (arms stiffly upright with hands in front of the chest) and bow once more. Usually an offering of cash is also put into the offertory box, sometimes prompted by an idea that the kami respond more to those who give more(3).

---

(3) At a Buddhist temple there may be more of a difference between "sightseeing" — usually involving going to see Buddhist statues — and "worship", which may involve sitting and listening to a priest chant sutras, occasionally chanting in unison a phrase such as "Glory be to Amida Buddha". However, even for "sightseeing" purposes many light sticks of incense in front of the statues or pray to them.

The behaviour is the same but the attitudes are different.

When informants were asked about their feelings at shrines or temples there is a wide variation in responses from those who spoke of a "serious" (majime) or "sacred" (shinsei) mood to those who said they felt "nothing particularly" except the feeling of being a tourist, one man adding as an afterthought that he thought people ought not to drop litter in shrine or temple precincts. Many mentioned mixed feelings, such as the man who said he goes to temples "half for sightseeing, but when I go there I also recite the pilgrim's song (go-eika)". Some, mainly men, say they have no feelings because they do not pray at all; this also applies to a few Christians who go for "sightseeing", although one of them says she prays with her (non-Christian) husband at a Shinto shrine because she says that in her heart she is "really praying to the Christian God as if it were a church", but it seems as if she does so in the Shinto style without any outward indication of her inner intentions. The variety of feelings expressed by informants are tabulated in table 11.1 but the figures are too small to allow any rigorous statistical analysis. Two general trends which are noticeable, however, are (i) that feelings of a closeness to the ancestors are more often reported at Buddhist temples (for obvious reasons, considering the Buddhist connections with the ancestral cult) — this reply coming from each of the two men who were the only ones to perceive any significant difference between shrines and temples[4] — and (ii) that women tend

(4) As mentioned, in chapter 3, both of these men are musicians with the Kyoto Philharmonic Orchestra.

to make petitions more often than men (because some men do not pray and report no specific feelings about such places). Since many mention a mixture of feelings, half values are assigned to such feelings in table 11.1.

Table 11.1 : Reported feelings at shrines and temples

	Men		Women	
	Temple	Shrine	Temple	Shrine
Feeling of peace or a "washed spirit"	5	3	5½	7
Thanksgiving	2½	2	2½	2½
Solemn, devout or sacred mood	1½	1½	2½	3
Earnestness	1	2		
"Asking for something"	3½	4½	10½	11½
Duty or Discipline	1		2	
Closeness to ancestors	2½		½	
Comforting souls of the deceased	1		2	
Sightseeing	1½	4	3	3½
Unconscious hope but no prayer	1	2	2	2
No feeling because no prayer	9	13	4½	3½
Nostalgia or duty at ancestral graves	2			
Worshipping God (like at church)				1
Feeling of well-being and appreciation	1			
Closeness to nature		1		
Recites pilgrim's song	½			

Two background influences upon these figures are also worth mentioning. One of these is that expressed clearly by one woman who said she feels a sense of "duty" to pray at a shrine "because everyone else does so", indicating that there is a certain social pressure to conform even if one has no formal relationship with any of those around at the same time. The question then arises why some resist any such pressure, part of the answer perhaps lying in male/female differences but a far more likely explanation comes from the finding that nine of those who say they never pray had some kind of

Christian influence in their backgrounds (through family, school or university) which is no longer explicitly manifest (since they now have no church connections but are involved with various Shinto or Buddhist rites) but which appears to have exerted a latent influence in hindering them from participating in prayer at shrines or temples even if they continue to visit such places for "sightseeing".

The recreational side of religion is manifested also in the behaviour of several informants who visit temples or shrines as a "hobby". These tend to go to places of worship more frequently than the average: of five families in this category, two go every week (one of them to temples, the other to Shinto shrines), one "once a week at most, sometimes less frequently", a fourth had visited about 30 temples or shrines while on holiday in 1981 and the fifth had visited about 20 temples in the same year. This fifth man keeps a large scroll depicting the goddess Kannon, around the edges of which are many boxes for the official shrines of temples he has visited; by June 1981 these had been largely filled up by the stamps of about 50 different temples. Some other families keep similar scrolls in their tokonomas but have sometimes taken several years to half fill them. Two families who go every week or "once a week at most" to Buddhist temples do so because the husband's hobby is viewing Buddhist statues. Both of these families had bought statues of Buddhist deities to be kept in their homes — one of the goddess Kannon to which a shataku man sometimes prays, the other of Miroku Buddha which the other man bought for his wife as a wedding anniversary present but to which he never prays himself. His wife does, so if she is worried about

the children being late back from school, she prays for their safe return. She says the prayers give her a feeling of relief and she feels the god seems to protect the children (mamotte kuresō) even though, unlike the idols in temples for which a special rite has been performed for a spirit to enter into them (nyūkon suru), no spirit has formally entered this statue in their home through such a special service involving the prayers and chanting of priests. Her attitude is therefore very similar to that of many who express such feelings of "relief" or "security" in many other aspects of religious behaviour, so that what may begin as a "hobby" (on the part of her husband in this case) may end up in a more definitely religious mode of behaviour which in this case also reflects the 'safety and security' 'motivation'. The religious aspect of such visits also affects the husband, because although he does not pray to the statue at home he does always pray to the first idol he sees at any temple, whereas he looks at and does not pray to the others(5). He says that one can not see Hotokesama (referring here to Gautama Buddha, Shakasama, rather than to the ancestors) so these images of the Buddha are his "representatives" and visual symbols of the invisible Buddha. However, as they have had a spirit put inside them by a formal ceremony, they also become incarnations or embodiments of the Buddha (Shaka no keshin) and as such he prays to them. What appears to be a "hobby" is therefore also religious behaviour of a kind normally referred to as idolatry.

---

(5) In this context 'statue' is used to refer to images which have not had a ceremony for a spirit to become incarnate in them, but 'idol' is used for such images. 'Image' is retained as a neutral word to include either of these.

Choice of Shrines

Even if occasional visits to shrines or temples during the course of the year were regarded as predominantly "sightseeing", it might be suggested that visits for New Year are a little different, involving more of an intention to "worship". Even for this, however, attitudes such as "to celebrate the New Year" were reported by 11% of the 55 people tabulated in table 5.1, and a further 24% saw the rites as "custom". This 35%, plus a few others categorised as 'others' in table 5.1 (who said they go for "sightseeing" or "because there is nothing else to do"), indicates that a sizeable proportion of people tend to see these visits more in terms of 'recreation' than 'religion'.

This is further borne out by some of the choices of shrines visited by these 55 people in 1981. Several people go to more than one shrine, and many vary which one they go to from year to year, but there is still an overall tendency to choose those shrines which are 'convenient', such as for parking or proximity to their homes, more than those which are the official ujigami shrines of their families. It should also be borne in mind that some of the 15 people who did not visit a shrine in 1981 would have done so had it not been for specific circumstances such as ritual pollution through the death of a close relative (3 people), having a cold (1 person), being too tired (2 people)(6), being in hospital (1 person), or a dislike of large crowds (2 people). Sōka Gakkai adherents go to their meeting hall and some

(6) There is a common expression, neshōgatsu, meaning a 'sleeping New Year', to describe such people.

Christians to a church instead of to a shrine[7].

Taking those who did visit a shrine, the following patterns are found:

Table 11.2 : Principal Shrines visited at New Year in 1981 by 55 people in Ueno

		Number of cases
(a)	Iwadani	5
(b)	A large shrine (*taisha*) in the Nishiyama area	6
(c)	*Ujigami* shrines	4
(d)	Ueno *jingū*	10
(e)	Famous shrines in Kyoto	12
(f)	Nissei company shrine	1
(g)	Others	17

Added to the 4 who visited their natal family's *ujigami* shrine is a fifth who would have done so had he not been prevented by ritual impurity following the death of a relative. All these 5 go regularly to the *ujigami* shrine each year, 3 of them mentioning a specific intention to pray there and the other 2 giving reasons of "to make a distinction (*kejime*) between the years" and "to taste the New Year atmosphere". The fact that one of them takes seriously the rules of ritual impurity also adds to a general impression that these people are on the whole rather more 'serious' in their attitudes to New Year shrine visits than many others.

All of these need to make journeys to Kyoto or other areas outside Ueno except for one man whose *ujigami* shrine happens to be the *taisha* mentioned in category (b) of table 11.2. He is included in the reckoning for (b) rather than (c) because his principal reason for going to that shrine is its proximity rather than it happening to be also his *ujigami*

(7) Several (nominal) Christians do go to shrines, and only 2 Christian men among those interviewed about New Year rites said they definitely do not go to shrines because, as one of them expressed it, "the real God does not live in such shrines".

shrine. Proximity was mentioned by all the others in this category, who considered that other shrines which are actually nearer (such as the Nishiyama local shrine or the Nissei company shrine) are too small to consider when deciding where to go at New Year.

Proximity also plays a role in the choice of those who go to the Iwadani shrine, but a few other circumstances also influence the choice. One man went there because he was in his yakudoshi, another man because the many steps up to the shrine constituted well-needed exercise for him, and one lady simply because her father had always gone there so she now goes every year too.

Eight of the 10 visiting the Ueno jingū go there every year. Of these, three say it is near, three that it is the "biggest local shrine", one because it has good parking facilities so they can go with the children easily and they do not have to climb too many steps when they arrive, and one family "because of its historic atmosphere". This last-mentioned family like to compare the numbers and "atmosphere" from one year to the next and take commemorative photographs to help them remember each year's 'feeling' (kimochi). All these reasons stress convenience and facilities much more than particular 'religious' reasons (such as a shrine being that of their ujigami or their entering a yakudoshi). In large shrines like the Ueno jingū it seems that 'recreational' motivations for visits are taking precedence over 'religious' ones, but when people arrive their actual behaviour is still 'religious' in the sense that they normally pray, buy charms or draw mikujis.

A similar motivation influences those who go to famous shrines in Kyoto except that for three of these families the shrine visiting is combined with visiting relatives in the area, and so reasons of proximity also play a part. Those who go at New Year to visit relatives in more distant parts of Japan go to local shrines in those areas: six of those in category (g) in table 11.2 did this in 1981. Similarly, those who go away on a family holiday without visiting relatives also drop in at local shrines where they happen to be, or else go for a day trip from home to a more scenic area and find a local shrine there. A few families always visit many different shrines each year: one of them went to 6 shrines in the first few days of 1981, another family to 4 shrines and others to 2 or 3 shrines or temples but not consistently to so many each year. Their main reason for variation is simply "sightseeing".

Only 25 of these 55 families regularly go to the same shrine each year, and among some of these the reason is often a practical one such as the availability of parking facilities. Even more practical reasons are given by the man who chose to go to the Nissei company shrine — that it is convenient in order not to drink and drive at New Year. Another man who went there the following year said he does not like crowds and the local shrine is safer for the children. For the majority of people 'practical' rather than 'religious' reasons govern the choice of a shrine, but they still perform 'religious' acts when they arrive there.

Shrines and temples as recreational centres

The fact that shrines and temples provide the main areas of public parks and gardens in many areas means that

they are often utilised for sporting or social activities. At the Nishiyama shrine old people often play a kind of croquet in the main courtyard, a practice reported elsewhere by Hendry (1981: 42), who also mentions the village shrine area as the venue for village volley-ball tournaments. The Ueno jingū hosts an annual nation-wide competition for players of a traditional card game called uta karuta[8]. Often shrines and temples are used by courting couples wanting to find somewhere quiet by themselves — and not infrequently deciding to buy a mikuji at the same time to see what it might say about endan (marriage proposals). Mothers with children wanting an area for the children to play also make use of shrine or temple grounds, and traditionally village shrines have often been regarded as safe places for children to play or travellers to pass the night, each under the protection of the local kami (cf. also Hendry 1981: 41). In the Spring the cherry blossom parks around many shrines and temples provide the venue for hanami, when family or work groups sit under the blossom eating, drinking and singing. Nissei employees do this after work, going as work teams[9] to the cherry blossom park surrounding the company shrine and there have plenty to drink together before they eventually return to their families in the shataku nearby. Similar scenes are also found in public parks not associated with shrines, or castle grounds containing cherry blossom and similar locations. While not overtly religious, the hanami custom is

---

(8) For descriptions of this card game and similar ones see the articles by Videen (1983) and Thayer (1983).

(9) Mainly men, with the only women being secretaries or 'office ladies', spouses remaining at home with any children they may have.

said to remind one of the transience of life because they bloom for only a little while before they die. As the 18th-century poet Issa, among many others, has expressed it,

"Get ready, get ready to die
Says
The cherry blossom"(10).

A similar use of shrine precincts for parties, but those with a more overtly religious content, comes at the time of Bon dances in August. At the Nishiyama shrine people from the areas near to the shrine bring their young children, the girls dressed in bright cotton summer kimono (yukatas), to the shrine about 7.00 p.m. where both men and women dance in a circle around a podium set up in the centre on which singers and musicians perform traditional Bon music to welcome the ancestors. Around 9.00 p.m. the younger children tend to be taken home and their parents often remain home too while the younger men and women remain dancing, drinking beer and socialising until about 11.00 p.m. No Sakurano or Aoyama residents were noticed among those there, however, the Jizō Bon one week later tending to overshadow such local Bon activities.

All these uses of Shinto shrines seem to stress the 'secular' or 'non-religious' aspects of the events, but their use of a religious venue still makes it difficult to disentangle them from the general sphere of 'religion'.

---

(10) Shinijitaku, itase
itase to sakura kana
死支度 致せ 致せと桜哉
Kobayashi Issa, Nanaban Nikki,
Complete Works Vol. 3 p. 40.
Translation by Dr. Patrick McElligott.

Certainly the Bon dance has a more specifically 'religious' purpose as compared to the use of shrines for sport or courting, but for most of the participants at the Bon dance the recreational aspects seemed to be predominant. A similar attitude was reported by Dore (1958: 303-305) for the local shrine festival in the area of Tokyo he studied. After describing the stalls selling sweets, balloons, goldfish and many other items, the competition stalls with ring-throwing and goldfish catching games, and so on, he notes that 'the sacred, as represented by the shrine ceremony ... seemed not to be given any transcendental importance as against the profane' (p. 304). The same might be said of the Yasaka shrine in Kyoto, where the side stalls are updated with various fairground-type amusements such as rifle ranges and a kind of 'ghost train' but the 'recreational' side stall appears to assume greater importance for most visitors than the 'religious' side further inside the shrine precincts. However, it seems as if most visitors participate in both sides, even if their interest is taken more by the 'recreational' than 'religious' aspects, so that the two are closely interwoven. This interweaving is further indicated by the presence of fortune-tellers (a palmist and a seimeihandan/astrology expert) among those with stalls in the 'fairground' area, and by the attitudes of those interviewed about divination. These have already been discussed in chapter 6, where it was pointed out that the most frequent reasons for drawing mikujis are "fun", "play", "curiosity" or "interest", while several informants also referred to consultation of palmists or other kinds of divination as "half play" (hanbun asobi). The 54% of the

questionnaire sample (60% of the women and 50% of the men) who thought that divination is 'something just for fun' display a similar attitude, but it should be borne in mind that 12·7% said it was not 'merely play' and 33·3% did not know what they thought about the matter. The association between divination and many Shinto shrines, whether through fortune-tellers using the premises as at the Yasaka shrine or through the priests themselves being experts in divination, further supports the consistent interweaving between 'religion' and 'recreation' found particularly in Shinto.

It can be detected in Buddhism too, but the association between Buddhism and mortuary rites makes the connection less obvious. It is seen in Buddhist rites of a non-funerary nature, such as those held at a small temple in Nishiyama in 1982 to mark the 800th anniversary (by the Kazoe system) of the birth of Shinran, founder of the Pure Land sects, in 1173. The day before the birthday service, a group of five women sat around in the temple area laughing and chatting among themselves next to a huge 'birthday cake' made of cardboard covered with gold paper, about 6 ft. in diameter. Although the following day's service in the temple was held in a formal manner, around the perimeter men dressed in dark suits took photographs, smoked and chatted among one another while their wives looked after the children dressed in bright kimonos, giving them the cue to file in at the appropriate moment. During the closing procession men and women scurried to pick up the good luck talismans thrown out by the priests, taking delight in managing to obtain one.

An even more relaxed atmosphere characterised the

highlight of a service at the Hyakumanben temple in Kyoto. The assembled crowd of about 300 people sat or knelt fairly formally during the 'serious' chanting part of the service. Some seemed to listen quite attentively, others shuffled around a little, but most joined in the times of group chanting. At the culmination of the service a huge 'rosary' consisting of beads about 2 inches in diameter interspaced with larger beads depicting images of the Buddha was lowered to the floor from where it had been suspended around the ceiling. Its circumference was only a little smaller than that of the entire matting area inside the temple. The assembly then formed two concentric circles, one on each side of the rosary, and began to pass the beads from one to another; a red scarf tied to a marked point showed when a full circumference had been completed. For the 10 minutes or so of this final part of the service the atmosphere was characterised by smiling faces, fun and friendliness. Most of the participants were mothers with their children, plus a few businessmen in their lunch hour, and all treated it as a game, sometimes chuckling a little and generally presenting a side of Buddhism which at the 'practical' level consists of amusement and recreation instead of the usually more sombre side of Japanese Buddhism.

The Jizō Bon in Sakurano

Another 'recreational' side of Japanese Buddhism can be seen in the festival for the Bodhisattva Jizō on or around the 24th of August, about 10 days after the Bon festival. There was a 'Bon dance' at the small Nishiyama shrine almost opposite the main gate of the Nissei factory

but it was attended mainly by local residents of those older housing areas, no Sakurano or Aoyama residents being recognised among the participants. Instead, the Jizō Bon tends to take prominence for public, neighbourhood events in Sakurano and Aoyama, perhaps because many in these areas go away over the Bon season but have come back before the Jizō Bon. However, the 'recreational' side tends to take precedence over the 'religious' side, as indicated by the following descriptions.

The Sakurano Jizō Bon is held on the Sunday afternoon nearest to the 24th of August in a large meeting hall within the factory precincts. At one end of the hall is a stage, on the right hand side of which is erected each year a dais consisting of a set of five steps above which is a screen containing a picture of Jizō taken from Buddhist art with lanterns on each side bearing the characters for 'Jizō'. The steps are covered by a dark red cloth and on them are laid offerings such as water melons, apples, oranges and (in 1981) two packets of Ritz biscuits. The offerings are bought by the jichikai each year out of money raised by a special collection round each block a few weeks previously, the money also buying prizes for the children's competition. Members of the jichikai set up the Jizō dais in the morning or early afternoon before the main events each year, and, after placing the offerings those responsible occasionally put their hands together and bow to the Jizō image "because that is what one should do whenever one puts offerings to a deity"(11), not necessarily with a formal prayer in their

(11) The attitude quoted here is that which is thinking primarily of worship at household altars, carrying over the same feelings to this situation too.

minds. The one individual who did express a 'feeling' in terms of her unvoiced prayer was that it was for protection and safety for the children (of the individual primarily but also, to some extent, of the local community as a whole)[12]. However, none of the mothers or children who later arrive for the main events of the day bow before the Jizō on the stage; a few sometimes go to have a close look at it out of curiosity but none say they regard it as something they should bow towards except for one mother who felt obliged to do so because the children around her started to put their hands together and bow to it. However, for the most part the image is ignored, even by those who sometimes bow to Jizō idols elsewhere, because this image has not had a ceremony performed for it to have a spirit put in it. It is symbolic but not regarded as an incarnation of the Bodhisattva.

The mothers and children, plus a few fathers, sit on benches facing the stage, many families bringing along snacks or sweets for themselves or for the children in particular. The main events begin at 4.00 p.m., when the chairman of the jichikai for that year goes up onto the stage to a microphone and welcomes everybody. He then gives a short talk lasting not much more than 5 minutes on who Jizō is in Buddhist mythology and the development of Jizō worship in this part of Japan. The parents sit politely listening, though not seeming to pay very much attention while some younger children fidget a little out of boredom or eat their sweets. (Later the jichikai chairman admits that he did not know much about Jizō either but had looked up all the

(12) The attitudes to the Jizō do differ according to the individuals responsible each year, and might also be influenced by the presence or absence of other people when they present their offerings.

information for his talk in reference books the previous week.) When the chairman has finished his talk the children's song contest begins.

Groups of friends of the same age, often those living in adjacent apartments, have practised for the previous week or two a popular or folk song(13) to sing for the contest. The size of groups range from three to nine and the age range from about seven to fourteen. They are accompanied by an electric organ and sometimes the children dance a little to the song as well as singing. The whole contest lasts about 1½ hours, after which there is an intermission while the judges decide on the order of merit. In the end every child receives some sort of prize, the quality of them depending on their ranking in the judges' assessment of their songs.

The final part of the programme consists of two films, the first a short Donald Duck cartoon dubbed into Japanese and used as an advertisement for safety in the home and the importance of knowing what to do in the event of a fire, and the second a film about a crippled middle-school girl who through various trials and discouragements manages to do well at calligraphy through persistent efforts. After the films end at about 7.15 p.m. the families rapidly disperse to their own homes.

This event has some religious elements through the setting up of the Jizō image, with its offerings and prayers by only those who place the offerings, but it is not the usual stone statue and for most of the proceedings it is

---

(13) Sometimes the same song can be chosen by more than one group.

ignored. The jichikai chairman has to look up the information for his speech in reference books, and most of those attending know very little about Jizō and are not particularly interested in finding out more. As far as they are concerned, they have brought their children along for a song contest and to watch films and are not particularly interested in the religious aspects of the rite. Those from Tokyo or other areas outside the Kansai often said in the interviews that they did not really know what the purpose of the Jizō Bon was and that they had first encountered it when they came to Ueno. The jichikai representatives feel they should put their hands together and bow their heads when presenting the offerings but are not very clear why they do so, except that such behaviour is 'customary', and only one lady could express definitely the kind of prayer she makes, which is unvoiced and more of a "feeling" (kimochi). The jichikai representatives feel they have to continue the precedents set by previous jichikais and are reluctant to introduce any major changes for fear of criticism by those who expect certain patterns to be continued from year to year. Attendance at the events is voluntary and participation in the song contest optional (though jichikai block representatives encourage families with children in their blocks to participate).

In the absence of those families without children (and even of some with children who may be on holiday), and with only a minority of fathers attending the events, it is difficult to see any sense of 'community' being reinforced by the 'religious' aspects of this rite in which the 'religious' element is minimal and most participants regard the

The children's song contest during the Sakurano Jizō Bon.

The Jizō image put up for the Sakurano Jizō Bon events.

events as recreation. The social aspects do reinforce a sense of 'community', however, and it would appear that the occasion of a religious event common in the Kansai region has been used in this relatively recently developed neighbourhood to provide a focus of interest for the children during their summer holidays.

However, something is 'expressed' by the event, but it is not of a directly 'religious' nature. This is seen in the nature of the films chosen. One expresses a concern with 'safety' and the other expresses the values of persistence, a value which is found in many other aspects of Japanese life, as seen in the frequent use of words such as '<u>ganbaru</u>' or '<u>gaman suru</u>' (Moeran 1984). Both 'safety' and 'persistence' express underlying 'motivations' in Japanese culture, 'persistence' being particularly conspicuous in the sporting field studied by Moeran (1984), and it is these which are latently expressed by this event, the overt connection with Jizō being rather periphery(14).

<u>The Aoyama nōryōsai</u>

This normally takes place on the Saturday or Sunday afternoon and evening nearest to the Jizō Bon. Usually it is held in one of the three 'parks' (play areas) for children on the edges of Aoyama-chō but in 1982 the evening meeting

---

(14) Professed 'belief' in Jizō is also relatively low. In the questionnaire it was asked whether people considered that Jizō influenced the fortunes in life of themselves or their children. The replies of 618 people showed a slightly higher proportion of women than men (10·9% versus 8·7%) who affirmed such a belief and a similar tendency (28·6% of women vs. 20·3% of the men) who replied "Don't know", so that the male scepticism was more pronounced for the "No" replies (60·5% of women vs. 71·1% of men). This male/female difference affects the Sakurano versus Aoyama distribution of replies but there are too few female respondents in Sakurano to make meaningful comparisons between the areas.

was held in the main street of the ward. The following description is based on the nōryōsai held on the 20th August 1983.

From 2.00 p.m. children's games are organised in the 'east park' of Aoyama, near the main entrance to the housing estate. These are organised by members of the local jichikai and take place in succession, alternating those involving physical activities with those which are more sedentary. The activities include hoop-la, a puppet show, and trying to split a water melon with a stick while blindfolded. Prizes are awarded for the competitions. Meanwhile the local shopkeeper dispenses free of charge crushed ice with a strawberry or lemon flavouring, and a few children play by themselves on the large graffiti board set up at one side. The children's games finish at 4.30 p.m., and there is an intermission until 6.00 p.m.

During the intermission the children's games are cleared away by jichikai officials and chairs are arranged around the edges of a circular open space. From 6.00 p.m. there is a singing contest for the children, who take it in turns in groups of 2 or 3, sometimes more, to sing a song through a microphone on a specially set up platform stage in the centre of the area. These are not formally judged, but a small gift of sweets is given to each participant. The children have mostly changed into cool brightly coloured yukatas (cotton 'kimono') for the occasion.

This is followed at about 7.30 p.m. by folk dancing. Two male singers stand on the podium and sing along with the music from a taped recording. Between songs they might have a break or exchange places with others. The songs are

traditional local tunes, folk songs which have been associated with Bon dances in the area since the Edo period[15] and possibly earlier. The people dance what are essentially Bon dances in a slowly rotating circle with rhythmical clapping at certain points in the song. However, those asked about the event usually deny it has any 'religious' significance and say it is simply folk dancing and folk songs. This is the attitude of five of those questioned about their views. Two others, however, take a different stance and say that they are really Bon songs and dances but because there is no Jizō idol present and they are not performed in the precincts of a shrine or temple then they are no longer 'religious'. Nevertheless, some hint of a religious aspect remains in the fact that on the lanterns around the central platform are written the words 'Jizō festival'.[16]

Shinto festivals (matsuri)

The fairground atmosphere at the shrine festival described by Dore (1958: 303-5) is in fact an adjunct to the procession which forms the principal feature of most shrine festivals throughout Japan, many of which lack the fairground features. The procession (gyōretsu) can take a variety of forms, but the most typical and traditional involves a group of about 30 to 40 young men carrying a portable shrine

(15) 1603 - 1868.

(16) A further indication that there may be more of a religious element than meets the eye is that those who participate in the dancing tend to be predominantly those families who are more involved with religious cults in the household, whilst those less involved or more sceptical tend to leave after the children's singing contest. This tendency can not be backed up by definite figures and relies largely on the anthropologist's impressions and a subjective evaluation of people as "more" or "less" 'religious'.

(mikoshi) on their shoulders around a set route which roughly demarcates the 'parish' boundaries of the shrine. Inside the mikoshi are the emblems of the deity (go-shintai, 'body of the kami'), and the mikoshi is therefore seen as the temporary abode of the deity itself. That this attitude (regarding the emblems as incarnating the kami) is held in practice by at least some people is indicated by the behaviour of two men (one in his fifties, the other in his thirties) at the front of the crowd of assembled spectators at a festival for a large shrine (taisha) across the river from Nishiyama. As the mikoshi passed them, they bowed towards it, the older one removing his hat. This shrine has two large mikoshi, which at this point had been loaded onto two barges which took them, the priests and the bearers along part of the river. This also involved going under the bridge carrying the main road out of Ueno in that direction. For a few minutes before the barges passed under the bridge, and until they had completely passed through to the other side, the central section of the bridge was closed off by the police, this whole section being demarcated by the setting up of four bamboo posts linked by Shinto 'sacred rope' as indicators of a temporary 'sacred space'. No pedestrian or vehicle was allowed in this area, the police remaining at the edges also, while the barges passed underneath because no mortal should be 'above' the kami in the mikoshi.

The small Nishiyama shrine almost opposite the main gate of the Nissei factory has no permanent priest but is instead looked after by a priest delegated from this taisha across the river. Nevertheless, the Nishiyama shrine does have its own festival (matsuri) which includes the processions

of 3 mikoshi. One of these is considerably larger than the other two and is carried by a team of about 20 men, almost all students paid for their work and provided with refreshments along the way. Before starting out from the shrine they had drunk at least a crate of beer between them and were showing signs of intoxication, several of them also finishing off the remaining bottles when they returned to the shrine after the festival. This larger mikoshi was carried around the main shopping streets of Nishiyama, the men calling out "Wasshoi, wasshoi" as they go; the phrase has no contemporary meaning but is interpreted by some as a warning announcing the imminent arrival of the god in each vicinity. They end up at the main gate of the Nissei factory, bring the mikoshi inside the factory precincts and put it down while they all have refreshments in one of the Nissei halls. According to one of the Nissei officials, their bill for the drinks and refreshments came to between 30,000 and 40,000 yen(17), and they had also made a contribution of 5,000 yen per person for the wages of those who had carried the mikoshi(18). They have lunch at the factory and in the afternoon help with the transportation of one of the two smaller mikoshis which are taken on different routes around the perimeter of the factory as far as the older wooden houses of Sakurano. One of these mikoshis, of the same design as the one taken through the shopping street in the morning, is carried by middle and high school children with some assistance from the university students, with

(17) i.e. £100 or more.

(18) The full amount of the payment for the students was not ascertained, but the Nissei contribution probably accounted for a significant proportion of it.

younger children pulling it on ropes attached to the front. A much smaller mikoshi is placed on a wheeled platform and pulled along by children with a little assistance from one or two of the adults. Each child is given a bag of sweets and biscuits as a reward, and at intervals along the way the whole procession stops for fruit juice dispensed by local jichikai representatives at special booths set up by each of the local neighbourhood councils in the older parts of Nishiyama near to the shrine. The Nissei contribution comes from the refreshments in the factory itself, and neither the Sakurano nor Aoyama jichikais are directly involved in the organisation of the matsuri. Those involved in carrying or pulling the mikoshis wear identical turquoise jackets with the name of the local shrine printed in white on the black border at the front and the character for matsuri (祭) printed in red on the back. They also wear white shorts and some wear a white headband with mauve spots as a sweat band around their foreheads(19).

Only 5 out of the 70 residents of Sakurano or Aoyama questioned about their attendance at this festival had ever been to it or seen it. Four of these lived in the shataku, of whom 3 had seen it only once and the other had watched it about 20 times over 30 years. Only one Aoyama resident had watched the festival (held on the 5th of May, a public holiday for the Boys' Festival) and he had been brought up in the older parts of Ueno. He had only ever seen it once, and that ten years before he was interviewed about it.

---

(19) Almost all are dressed identically, but there are a few individual exceptions such as those with blue instead of white shorts.

The larger mikoshi at the Nishiyama matsuri about to be put down inside the main gate of the Nissei factory.

Children pulling another mikoshi during the Nishiyama matsuri.
The perimeter wall of the Nissei factory is in the background.

By contrast, 23 people had gone to watch the more spectacular Ueno matsuri held in October in the city centre, and two others had watched it on television rather than going to see it themselves. Of these 23, 14 had seen it once only and 3 twice. The remaining six are all from Ueno and used to live in the more central areas before moving to Aoyama. Five of them go every year and the other man has been "often since childhood", their visits to the festival often being combined with visits to relatives, especially for the two who can watch the procession from the windows of their parental homes. The Ueno matsuri consists of 13 heavy floats on wheels dragged by ropes through the narrow streets of the city centre. From 8.30 a.m. there is a Shinto rite to pray for the safety of all the participants and for the gods to choose the order in which the floats should proceed, the divine oracle being elicited by the drawing of lots. From 9.00 a.m. 13 mechanical dolls are set performing in front of the shrine, each representing one float and the legends or stories connected with the origin of that float. At about 9.40 a.m. the floats begin to move off, the priest of that shrine leading the way. He says that in the first half of the festival he feels in a serious mood because he is offering himself to the deity but on the way back in the afternoon the rhythm of the music is much faster and he enjoys himself as he sweeps along in his colourful robes at the head of the procession; during the lunchtime break at 1.00 p.m. the participants go home to change out of their formal ones with their family crests on into long flowing clothes in which to enjoy themselves. They also take the opportunity to drink sake, which helps put them in a festive

mood for the afternoon. According to the priest who organises the procession, the festival is focused upon a deity who is asked to protect those in the local area, especially each neighbourhood which participates in the matsuri. Each local jichikai decides on an appropriate monthly contribution from each home in its area, depending on the size of the home. Often it is about 200 yen per month, but sometimes a rich person volunteers to pay on behalf of everyone in the neighbourhood. The cost of each float, including paying those who pull it, maintenance and storage costs, comes to 700,000 to 800,000 yen each year, most of which is raised by the local districts; the city council gives a contribution of 300,000 yen per float and some money comes also from the sale of chimakis and other charms or souvenir fans on the day itself(20). All local residents except those belonging to the Sōka Gakkai or to a Christian church give donations, but the priest says that only the individuals who volunteer to pay on behalf of everyone are "really religious: the rest are not". Up until 1955 there were mikoshis carried on the shoulders of young men but "now there are no more strong men willing to do it voluntarily so we employ students. Some of the military come to help as well." Children from the local area help with the music, the beat being the same as that for the Gion festival described by Bownas (1963: 76-89); there may be a difference in the range of musical instruments in Ueno, however, since the anthropologist can not remember large drums being played at the Gion festival. In Ueno these are

(20) It is not clear from the priest's account of the expenses for each float whether this also includes depreciation, since a new float is constructed every 20 to 30 years on average.

played by university students, hand drums by those aged between 10 and 16, while younger children ring bells and take it in turns if there are not enough bells for all who want to participate. Flutes and pipes are played by those skilled in wind instruments, and all musicians have regular practices together by neighbourhood groups from about one month or so before the day of the festival.

Among Sakurano and Aoyama residents who had visited either of these two festivals, the dominant view is that they provide entertainment and are interesting diversions in the course of the year. Some say that they like the atmosphere in the streets and shops at the time of the Ueno matsuri and that they go as a family mainly for the benefit of the children or for "sightseeing". A few who had previously lived in the older parts of Ueno say they like to catch a chimaki if they can, claiming that any efficacy (go-riyaku) from the charm comes only if one catches it, not if one buys it. Certainly the crowd at the Ueno festival try eagerly to catch any chimaki thrown down from the floats, and the children are also keen to catch sweets which are sometimes thrown too. Since neither Sakurano nor Aoyama have their own local procession, and Sakurano residents are only indirectly connected with the Nishiyama festival by their firm's contributions to it, their attitudes to these events are much more on the level of 'recreation' than 'religion', in that the blessings for local residents sought by the performance of these festivals do not include Sakurano or Aoyama which are technically outside the 'parish' of the deity. As new estates they do not yet have any local shrine of their own and their jichikais are not formally included in the organisation of the older

Nishiyama festival. Nevertheless, the Nissei company is involved in the local festival, indeed as a major sponsor of it and acts on behalf of all its employees in this involvement. The reasons for the firm's contributions each year may be partly in preserving the company's reputation locally through giving generously to local events and partly in religious motivations, though any such religious motives are no longer ascertainable because those who decided to support the festival when the factory was first established are now dead or retired (and no longer in the area) while later generations of employees maintain the precedent established already. Any religious motivation is the same as that of individuals who might make a large contribution to the Ueno matsuri, since there is a widespread idea that good fortune comes during the following year to those outside whose homes the mikoshi halts, and such halts are arranged in advance to be outside the homes of the most generous contributors to the matsuri (cf. also Dore 1958: 302).

Therefore these festivals are regarded mainly as 'recreation' with very little or no 'religious' content; a similar finding is reported by Sonoda (1975: 133-4), who on the basis of interviews with those involved in the organisation of a matsuri writes that most people see the festival as recreation, or its purpose as 'promoting friendships' and no-one at all answered by reference to the religious motif of the matsuri. However, despite these 'emic' emphases on the recreational side, it is still very difficult to dissociate the 'recreational' from the 'religious' sides of the festival. In such cases 'recreation' and 'religion' become virtually synonymous.

Tourism

Not only are famous matsuri, shrines or temples the foci for "sightseeing" of a 'religious' nature, but also the whole 'culture of tourism' combines a number of 'religious' features with 'recreational' or social activities. Historically, pilgrimages provided this mixture of 'religion' and 'recreation', but owing to the costs and difficulties of travel during the pre-modern period one or two representatives of a local religious fraternity (kō) would be sent out on the group's behalf. Each member gave the representative a parting gift (senbetsu) and on his return would receive charms (mamori or fuda) from the temple or shrine. Gifts (miyage) may also be brought back by the representatives: originally the word miyage, now written with characters for 'product of the earth' (or region), formerly had the characters for 'shrine charm', indicating its religious origins and convergence with mamori (Graburn 1983: 53). The pilgrim, dressed in special white hare dress (haregi) and carrying a cane, received hospitality along the way from co-members of the religious fraternities (settai-kō) for the institution being visited (ibid., p.52), and a similar feeling that hospitality should be extended to pilgrims persists today in Shikoku (Kesaya Noda 1983: 179-180). In at least some cases, however, the 'hospitality' was provided by the geisha establishments and brothels which were often located near to famous shrines and temples (Graburn 1983: 54; Beardsley, Hall and Ward 1959: 315) while 'in earlier times, dancing girls, who also provided sexual services, used to be found in temples and shrines' (Hendry 1981: 20). Norbeck (1954: 161-2) mentions also that 'a few decades' before his

N.B. Pages 649 + 650 have been bound in reverse order.

and indeed items such as entrance tickets to important tourist sites[22], hotel receipts and other such kinen are incorporated into the photo albums compiled after the trip. The photographs themselves must contain evidence of the tourist site, especially that for which it is famous[23], plus proof that one has been there. Therefore typical photographs show oneself standing in front of the central tourist site, such photographs being taken by an official photographer or by another person present at the time, using the subject's camera; a mere photograph of the site without the presence of the person who went there is invalid as a kinen shashin, commemorative photo (Graburn 1983: 49-50). Further 'proof' that one has visited a particular site can come from using an inked stamp available at most tourist centres such as castles, towers and temples, and also at local railway stations, to stamp the back of a ticket, tourist book or similar item retained as a kinen. Such practices correlate with the use of photographs of the 7 - 5 - 3 rite to 'prove' a parent's love, or the preservation of umbilical cords as 'proof' that mother and child were connected.

Safety is also emphasised by the use of mamori charms as both senbetsu and miyage. For internal tourism

---

(22) These often contain a portion retained by the visitor which depicts a glossy photo of the place and some explanation about it.

(23) Commonly the principal building, but the photographs may also include products of the area such as silk from Nishijin in Kyoto, pottery raccoons/badgers (tanuki) in the pottery village of Shigaraki in Shiga prefecture, Hokkaido (Ainu) bears or local fruits, vegetables or other products. It is from among these meibutsu that miyage and kinen souvenirs are obtained (cf. Graburn 1983: 47).

study 'Bon dances ... were the traditional occasions for sexual license'. In all these ways it might be said that 'religion' and 'recreation' went hand-in-hand[21].

Graburn has investigated the way in which former religious practices permeate modern tourism. When a person, or small group which is part of a larger group, goes on a major journey, farewell gifts (senbetsu) are given at a leaving party (sōbetsukai), often consisting of cash or items for the journey such as a camera, alarm clock or case. A mental or written check list of such gifts is kept by the traveller, who during the journey purchases 'souvenirs' (miyage) both as personal memorabilia and as gifts for those who gave the senbetsu. Typically the value of such miyage is approximately half that of the senbetsu given by each person, who receives his or her miyage in exchange at a welcoming home party (Graburn 1983: 44-5).

Nevertheless, these practices in the realm of 'tourism' still contain the themes of 'memory' and 'safety' discussed in earlier chapters. Most conspicuous in tourism is the notion of kinen, which Graburn loosely translates as 'souvenir' in its adjectival sense but explains that 'it has a more fundamental importance in Japanese, for it is the legitimizing, commemorating, material symbol not only for tourism, but for other life events' (1983: 47). He continues that 'kinen is the memorial, the lasting symbol of an important event. It could be a gift, a tree planted when one leaves school, a memorial plaque, stamped visa, etc.' (ibid.),

---

(21) Where kō have survived to the present day, they also have a strong 'recreational' component (Plath 1969: 143).

A Jizō image with regularly changed offerings outside a commercial office block in Nishiyama. In the background an area has been demarcated by 'sacred rope' in preparation for a jichinsai.

Setsubun rite at the Ueno jingū which has culminated in a bean-throwing rite during which the spectators try to catch the beans thrown out by the priests.

they are normally miyage, but for journeys outside Japan they may be senbetsu. One man in the Nissei shataku was given a mamori by his mother when he went to the U.S.A. on a business trip in June 1983, because "America is a very dangerous place, with not very good public peace and order" (chian ga yoku nai). A combination of the themes of 'memory' and 'safety' is reported by a Japanese postgraduate student in Manchester whose mother gave him a mamori consisting of a pouch containing sand from his father's grave, which he wore on his person at all times. It may be that the overt purposes of travel have shifted in emphasis from 'religion' to 'recreation', but there remains a mixture of both aspects in modern tourism too.

Miscellaneous annual events (nenchūgyōji)

New Year is the principal and most conspicuous annual event (nenchūgyōji) of the year, but among some of the other events in this 'emic' category are several which are seen as primarily 'recreational' rather than 'religious'. Indeed, for some of these 'customs' the 'recreational' element has become so strong and the 'religious' so weak that they are only marginally included in the sphere of 'religion' in Japan. These other events are as follows.

a) Setsubun[24]

This 'game' at the traditional beginning of Spring is performed by all families questioned, including those with Christian and Sōka Gakkai connections or affiliations, except for some who began it only after they had children above the age of one or two. Many with adult children like the

(24) See also chapter 5.

Satōs, and who appear to have relatively few 'religious' connections, also participate in the 'game', throwing the number of beans appropriate to their age out of the window or into a corner of their room. Those with school age children throw them at a family member wearing a 'devil mask'. It might be that it is viewed in rather a similar way to the Santa Claus cult in the West — as a 'game' mainly for children but 'harmless' for adults too. However, there is still a definite religious element to the Setsubun rites, even if only in the cry "Out with the devil and in with good fortune".

For many families it extends further, however. Some go to special services held at Shinto shrines which culminate in the priests throwing beans or consecrated rice cakes to the assembled spectators who think it is "lucky" if they catch one. One Aoyama housewife goes to such an event every year but has not yet managed to catch a rice-cake, while another goes to a Shinto shrine to buy consecrated beans which she offers on her Kamidana during the day before they do the bean-throwing rite in the evening after dark, the time when all other families do it. Another family, the Ikedas, go at Setsubun each year for their principal shrine visit rather than at New Year, and at that time they take back their old mamoris and buy new ones. The husband's bicycle, on which he depends for his livelihood as a professional bicycle racer, is also given a ritual purification (o-harai), just as some families have their cars ritually purified at New Year in order to gain traffic safety in the coming year. These few observations suggest that attitudes to Setsubun may often provide a line of

demarcation between a 'more religious' minority and the 'less religious' majority. This is far from being a generally applicable rule because such categorisations in themselves are subjective and may be based upon a wide variety of criteria, but attitudes towards Setsubun may still provide one useful index of 'religiosity'.

b) The Girls' and Boys' Festivals

If Setsubun is seen as in some sense a New Year rite, in that it marks the end of winter and beginning of Spring, by the older calendar falling a day or two before the beginning of the new year, so that it in effect marks the beginning of the ritual and agricultural years (Norbeck 1954: 159; Bownas 1963: 33)(25), then it also conforms to a pattern of rites which nowadays includes New Year but not Setsubun. These rites are of Chinese origin and fall on odd numbered 'double dates' — i.e. the first of the first month, third of the third month, fifth of the fifth month and so on until the ninth of the ninth month. The last of these, however, a 'chrysanthemum festival', has fallen out of use as a specific date for ritual action because the shift to the Gregorian calendar now means that chrysanthemums bloom in October(26). The other rites are sometimes celebrated by the old calendar in rural areas if this is more convenient by the agricultural calendar, one of these being the Girls'

(25) Rites such as those on the 'first Day of the Horse' (Hatsu-uma sai) are still observed, as described in chapter 12, and these refer to the first such day after Setsubun, not the first one after the New Year.

(26) Many chrysanthemums are still put on display outside houses or used to dress life-sized dolls at a famous annual chrysanthemum show at Hirakata, between Osaka and Kyoto.

Festival on the 3rd of March.

For up to a month beforehand those families with a daughter set up a dais of raised steps covered with a red cloth, on which a set of dolls are placed in carefully arranged positions (see photograph). These dolls are bought as a complete set from department stores, at a cost of up to 800,000 yen or more, and are usually bought by the girl's grandparents. Family practices differ according to whether it is the maternal or paternal grandparents who buy the dolls, but as a generalisation (based on data from only about a dozen households) it seems that the maternal grandparents buy the dolls except in cases such as their already having several grandchildren but the girl is the first on the paternal grandparents' side, or cases in which the girl's parents have significantly more contact with the husband's parents rather than the wife's (through proximity, deaths or other factors). Similarly, a set of warrior dolls (also arranged on a dais) for the Boys' Festival on the 5th of May, along with carp streamers (koi nobori) flown from a pole outside the house (or attached to a pole on an apartment balcony in smaller versions), are normally bought by paternal grandparents but there are often exceptions according to family circumstances, some parents reporting that both sets of grandparents wanted to buy such items, these usually being families in which the boy is the first grandson for the maternal grandparents.

Many families see these 'customs' as devoid of any overt religious significance but behaviour strongly resembling religious action is reported by some households who bow to the display either when they first place a kind of 'offering'

of special rice cakes wrapped in seasonal leaves on the front row or on the morning of the festival day itself. They do not see this as 'prayer' but more a kind of 'greeting' (aisatsu) or 'custom' and are often unsure why they should continue the practice. A more specifically 'religious' kind of behaviour was observed in the case of one lady interviewed about a week before the Girls' Festival. A large dais filling a whole room of her small Aoyama house had been erected some time previously and the interview took place in her living room which contains a Kamidana where she worships daily. When at the beginning of the interview the anthropologist's usual gift to the household was given to her, this lady immediately took it to the adjacent room, placed it on the Girls' Festival dais in a formal kneeling position and returned for the interview. Later in the same interview identical behaviour was observed when a neighbour called with a box of cakes. Neither gift was opened during the interview and it is not known how long these gifts were left there as 'offerings'. Such behaviour is identical with the presentation of 'unusual things' (mezurashii mono) at Butsudans or 'substitute Butsudans' (cf. chapter 3) and it is significant that for a few weeks in which it was set up the Girls' Festival display took the place of a Kamidana for this purpose. No similar behaviour was observed at any of the other households with girls who were interviewed in the same few weeks, and it might be relevant to note that this exceptional woman not only is generally known as "very religious" among her neighbours but also had to wait 11 years before she could conceive her first child, a girl. Her behaviour, even if unusual, is nevertheless significant in

Display of Girls' Festival dolls, showing the gift brought by the anthropologist (wrapped in blue) offered as if to the dolls.

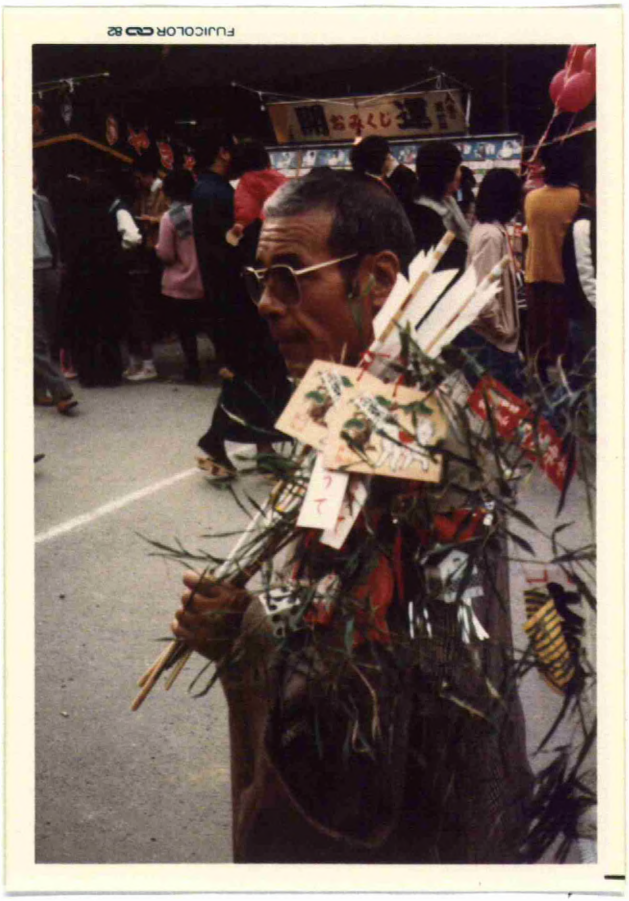

Visitor to the Ueno jingū for New Year with ema plaques and arrows to put in his tokonoma as "kinds of mamori".

showing that there can be some religious content to, or aspects of, a custom which is not normally associated with 'religion'. There is also a more widespread saying that one should take down a Girls' Festival display within a week after the festival day itself or else the girl will not be married but will be 'left on the shelf' — like the dolls. Whether or not this is 'believed' makes little difference, it seems, to the fact that the dolls are always taken down very soon after the 3rd of March, since it would appear odd to leave them up after that time(27). The Boys' Festival display is similarly taken down fairly soon afterwards by most families, except for one(28) who said that their family tradition was to keep up the carp streamers and stand for one month after the event, there being apparently no similar saying about a boy's marriage chances being jeopardised.

c) Tanabata

This festival on the 7th of August is said to derive from a Chinese legend about the weaving girl who on account of 'the bliss of marital relations with the cowherd boy ... neglected her task of weaving' so that as a punishment 'she and her lover were separated eternally by the Milky Way and are allowed together only on this one night a year' (Saso 1972: 26). In some parts of rural Japan, as described by some Ueno informants, large tanabata decorations were put up outside houses, almost as tall as the house itself, but such

(27) Compare, perhaps, the 'standard' British idea that Christmas decorations need to be taken down by the twelfth night.

(28) This is the family who are also different in their having the weaning rite for babies (tabezome) on the 130th day after birth instead of the 100th.

practices have disappeared in urban areas such as Sakurano and Aoyama. Instead, schoolchildren make tanabata decorations by attaching paper streamers to branches of wood which may be put up in the genkan (entrance way) of their homes for a few days or a week. It is significant, however, that these also include a card on which the child writes a kind of prayer or promise to the effect that he or she will 'work hard and be good'. Despite the formal separation of religion from the State educational system, such 'customs' are taught in the schools in the same way as schools organise outings to famous shrines or temples for their educational content. The extent to which a 'religious' element is taught probably depends upon the teacher and the school, but in one instance observed by the anthropologist a primary school teacher took a class jogging into a temple's grounds, up to the front of the main building and there taught the children to say in unison "Good morning, God" ("Konnichi wa, Kamisama") before they all jogged off again.

The religious element in tanabata and the Girls' and Boys' Festivals is very slight and may vary considerably from case to case. Generally they are regarded as falling entirely into the sphere of 'recreation' or 'custom' rather than that of 'religion'; and the religious aspects are either ignored, played down or absent altogether except for certain rare instances such as the lady who put gifts received as offerings on the Girls' Festival display. However, all of these three rites derived from China, where on the same dates there are Taoist and other religious rites held. Tanabata, for instance, has its parallel in the Festival of the Seven Young Ladies, but also coincides with the rite for the

'Opening of the Gates of Hell', when the 'hungry orphan souls with no offspring are thought to wander about, looking for sustenance in the visible world' (Saso 1972: 26), an idea which has its parallels also in Japan in the segaki rite for feeding such spirits around the time of Bon (Smith 1974: 19-20, 42-3; cf. also chapter 12 of the present work). Chinese parallels to the other 'double date' rites consist of the celebration of the lunar New Year (first of the first month), the Birthday of Hsüan-t'ien Shang-ti (third of the third month), the festival initiating the summer solstice (fifth of the fifth month) and the Birthday of T'ai-tsu Yeh, the 'naughty god child' on the ninth of the ninth month. Such parallels do not necessarily make the Japanese rites held on such dates in any way 'religious', but they indicate that there might be more religious traces than is obvious at first sight. On the other hand, it may be that the process of borrowing from China has obliterated any religious elements to such an extent that these rites are no longer 'religious' in the Japanese context. Such a process has taken place to a large extent with Christmas.

d) Christmas

Plath (1974) has investigated the Japanese adoption of Christmas in some depth and little needs to be added to his findings. He contrasts the Christmas party held by many Japanese firms, including Nissei, to which wives are invited, with the more traditional end-of-year parties (bōnenkai) which only professional women such as waitresses, geishas and entertainers are allowed to attend. Christmas gift-giving is reciprocal, in comparison to the end of year gifts from junior to senior, pupil to teacher, office

worker to office manager, and is seen as more 'democratic', a view also expressed about Christmas parties. Christmas is also celebrated in Japan by the playing of songs such as 'Rudolph the Red-nosed Reindeer' ad nauseam in shopping centres, playing Santa Claus in many households and the eating of 'Christmas cake' (a thin sponge topped with thick icing) which is often eaten on the evening of Christmas eve after the husband returns home from work because Christmas Day itself is a normal working day unless it happens to fall at a weekend. A few families buy plastic Christmas trees, but this practice is not so common. Within a few days Christmas is practically forgotten as it is swamped by the New Year rites which are the major religious events of the year for most families and the only time when almost all places of business are closed down (except for a few pin-ball (pachinko) alleys and perhaps a few hotels etc.).

Plath sees the adoption of Christmas as an expression of Japan's modernisation, and writes that 'if the Japanese are ... more captivated by the Santa Claus cult than other non-Western peoples, this would seem no more than correlate with the recognised extent of Japan's modernity' (1974: 269). However, it is possible to go a little deeper than this by asking why it is that certain aspects have been systematically adopted and others rejected. Some answer to this may lie in the fact that those aspects of Christmas which have been adopted are those with existing Japanese parallels at New Year — the parties, greeting cards, gifts and Christmas trees (paralleling the kadomatsu pine decorations at New Year) — but with the 'democratic' elements mentioned above also included in the adoption of these. Special foods

(o-sechiryōri) are eaten at New Year, so Christmas cake is a natural extension of this practice to a different setting a few days earlier. However, there has been, it seems, a systematic filtering out of all specifically 'religious' elements; the word 'carol' (karoru) refers to 'Jingle Bells' and 'Rudolph the Red-nosed Reindeer' but specifically Christian songs are generally unknown outside the churches. The few Japanese greetings cards available for Christmas (and usually printed in English, primarily for foreign residents) contain words such as 'Season's Greetings' rather than 'Happy Christmas' and invariably have Japanese artwork on the front rather than any Biblical motif(29). Plath (1974: 267) also notes the absence or rarity of 'the dramas and readings that are a familiar part of the American popular celebration — Dickens, Menotti, Clement Moore', which seem to have been omitted from the elements imported largely because their religious and cultural significance had no previous Japanese parallels at New Year. The Christmas story itself as found in the New Testament is hardly known, if at all, by most Japanese, and those who have heard of it are aware of only a fragmented vague outline, probably considerably less than the average 'non-religious' European.

To some extent the exclusion of these religious elements from the Japanese Christmas might be attributed to the secular attitudes to Christmas among the Western public, with any religious vestiges further stripped away upon reaching Japan. However, the importation of so many other facets of Christmas (such as Santa Claus etc.) virtually

---

(29) Only cards sold at specialist Christian book shops for Japanese Christians contain Biblical motifs and Japanese texts; these are also in postcard form, like the Japanese New Year cards.

intact suggests that there has been a conscious or unconscious filtering out of any 'religious' elements and an adoption of those elements only which had existing Japanese parallels. In this way Christmas has become virtually 100% non-religious in Japan, except among the Christian minority.

Confirmation of this attitude is found in the comments by several questionnaire respondents who wrote in the margin 'Christmas is not religious', next to a question which stated that 'in Japan the same person participates in a variety of religious festivals such as Miyamairi, Higan and Christmas', and then asked, 'Do you think this is strange?'(30). Out of 662 respondents, 14·8% replied 'Yes', 52·6% 'No' and 32·6% 'Don't know'. In other words, only about 15% of the sample saw these categories as exclusive rather than inclusive of one another. These tended to be younger people and the lesser educated (who are often attracted to 'extremist' groups like the Sōka Gakkai, as discussed in the previous chapter). Only 7% of those calling themselves Shintoists, compared with 19% of the Buddhists (including the Sōka Gakkai members) and 40% of the Christians replied 'Yes' to this question, a finding consistent with the Sōka Gakkai and Christian claims to offer a distinct and unique way of salvation, a teaching which therefore tends to view religious teaching in terms of polarity rather than complementarity.

Regarding the 85% majority view, however, which includes both the 'No' and the 'Don't know' respondents to the above question, the assumption has often been made (e.g.

---

(30) This question was based on a similar one by Morioka (1981), who found that 19% replied 'Yes', 77% 'No' and 'others' accounted for 4%.

Earhart 1974: 1-8; McFarland 1967: 20-23) that the Japanese do not compartmentalise their different religious traditions but rather tend to reconcile opposites into a syncretic synthesis. At one level of analysis this is true, but that level in itself tends to impose such a viewpoint because it starts with preconceived categories such as 'Buddhism', 'Shinto' or 'Christianity'. However, the comments made by several people that 'Christmas is not religious' seem to point in a different direction: rather than 'syncretism', a variety of practices may be adopted which are viewed as 'non-religious' or merely 'customs', just as many 'religious' practices such as grave rites or miyamairi are classified as 'customs' by the majority who call themselves 'non-religious' (but do these rites anyway) because they do not fully identify themselves with any of the religious labels used by academics. The labels themselves are understood but are not recognised as valid categories for interpreting one's personal experience of religion and therefore the categories are retained but one's own self-classification puts oneself outside of these categories as 'non-religious'. In this sense, many of the 'customs' viewed by academics as 'religious' in terms of an 'etic' category are not viewed as such in 'emic' terms because of the exclusive connotations which the word 'religion' often holds, in terms of distinct groups like the new religions or Christianity. The word 'religion' (shūkyō) is itself a word coined only a century ago and has a variety of nuances (Spae 1971: 22-4). If used in an exclusive sense most Japanese are 'not religious' because their experience includes 'customs' from many 'religions'. However, on a practical level they do pray to gods, ancestors

and so on, consult diviners, fear yakudoshis, visit temples and shrines for "sightseeing" but pray when they arrive, and do many other practices which they themselves do recognise as directed in some sense to a 'spiritual' force or being outside of themselves. This is a level of experience which they would also call 'spiritual' (reiteki), or 'religious' (shūkyōteki, or shinkōteki, 'relating to faith') in an experiential sense rather than an academic classificatory sense (regarding Shinto, Buddhism or Christianity). At the same time such an attitude allows for the adoption of 'customs' such as Christmas which are 'not religious'.

Conclusions

The many examples in this chapter have shown that religion and recreation are often not clearly distinguishable in practice. This means that any theory which categorises them in opposition to each other, as Ooms (1967: 312-7) tends to do in relation to Japanese ancestral rites(31), is engaged in constructing what might prove to be an artificial or ethnocentric categorisation in the mind of the researcher which does not always bear application in practice — the same problem as that which confronts Durkheim's sacred/profane dichotomy (Evans-Pritchard 1965: 63-8). Essentially the examples given in this chapter lie on a continuum of more/less religion or recreation rather than in opposed

(31) Ooms (1967: 313-4) shows in his diagrams what might be interpreted as a continuum but in his discussion sees the two categories as opposed, to the extent that he sees 'play' as a degenerate form of religion, or as religion 'drained' of its 'semantic content' (1967: 315), rather than viewing the two as aspects of the same phenomenon which may have been as it is for many centuries.

categories of 'religion' and 'play'. From an 'etic' point of view it is often very difficult to decide where the boundary between 'religion' and 'recreation' actually lies, since the two aspects merge into one another and indeed complement each other. From an 'emic' point of view, however, many of the practices described above are 'not religious', such as playing sports inside a shrine, observing Boys' and Girls' Day festivals or observing some customs connected with Christmas. Nevertheless, they can still involve some religious aspects, at least among some people, even if the majority consider their behaviour to be primarily 'recreational' rather than 'religious'. Taking children to play in a shrine may be a response to the fact that it is a 'safe' open space free from dangerous traffic, but it is also considered 'safe' because of the protective gaze of the local kami(32). Old people who go to a shrine to play croquet, housewives who go to the market there, and young courting couples who find it a convenient place to be on their own together all pass under the entrance arch (torii) and most observe the tradition that they should therefore go to "greet" the god into whose territory they have entered. Not only would it be 'impolite' not to do so, but also may be 'dangerous' if neglect of this formality brings 'bad luck'. The religious and the recreational aspects are then indistinguishable at the level of practice.

The examples given in the above paragraph suggest that the underlying motivation of 'safety' may be

---

(32) Embree (1946: 21) mentions the same practice in relation to children playing in a structure housing a Buddhist deity.

responsible for many of the 'religious' aspects of these 'recreational' activities. Such a motivation is stated by the priest of the shrine organising the Ueno matsuri to be the rationale behind the festival; the Gion festival in Kyoto originated as a religious rite to expel plague (Bownas 1963: 85) and similar motivations of 'safety' may have initiated similar festivals elsewhere in Japan. Those who catch a chimaki say the charm is supposed to bring 'good luck' and protection from danger, so they put it outside their front doors or inside their genkans as a yakuyoke ('averting calamity') charm to bring safety to their homes. Even if in some cases they are doubtful about its efficacy, they nevertheless put it there "because it does no harm and there's no reason not to do so", a rationalisation strongly reminiscent of those who claim not to believe in seimeihandan but do it 'to be on the safe side'. Only one person with a chimaki gave a purely 'practical' reason for affixing it to her door: she had not been to the Ueno festival itself but had been given it by the wife of the Aoyama jichikai head for that year (who had brought back a spare one from the festival), so the recipient put up the charm in order not to cause offence to the donor. Others either thought it had "some" efficacy, in a general way, or were unprepared to commit themselves on the issue, saying "Don't know", sometimes adding that they had not really considered the question very much. All of them still kept the chimaki in their entrance way or outside their front doors except for one woman who had caught it when she visited the festival a few years previously but now hides it out of sight on top of a bookshelf because she is embarrassed to admit to any

religious inclinations[33]: her response to the question of efficacy was also "Don't know".

If the 'safety' motivation lies behind at least some of the religious activities mentioned in this chapter, it is activated by the occurrence of events which are viewed as primarily recreational. Leisure time can be spent in a variety of ways — in sport, watching television, visiting friends and so on — but it also may be filled with recreational activities of a 'religious' or 'semi-religious' nature such as watching a matsuri or visiting temples as a "hobby". For the individual or family, 'religious' events occupy a part of 'leisure' time, and, as shown in chapter 10, it is often those with more 'leisure', the women, who become responsible for rites at the family Butsudan or Kamidana.

However, even if leisure time provides a setting in which religious activities may be conducted, 'religion' is not confined exclusively to the time available after work is finished — the 'after hours' in Plath's (1969) terminology. Plath in fact devotes relatively little space to the religious forms of recreation, largely because other kinds of recreation do occupy more of the leisure time of most people than 'religious' recreational activities. Even less attention has been paid by most writers on Japanese industrial life to the religious features associated with work, and an ethnographic account of these features at Nissei is therefore the focus of chapter 12.

---

(33) She votes for the Communist party and gives the impression of having no religious inclinations until questioned in detail. It is not unlikely that she would have refused to fill in the questionnaire or to be interviewed had it not been that she had previous contacts with the anthropologist and his wife in other contexts.

PART IV

SURFACE STRUCTURES

CHAPTER 12

COMPANY RITES

Virtually nothing is recorded in Western literature on Japan regarding the prevalence of religious rites in Japanese factories.(1) There is hardly any mention of such rites in the principal studies of Japanese factory or company organisation such as those by Dore (1973), Clark (1979), Cole (1971), Abegglen(1973) or Rohlen(1974). Rohlen (1974:41) briefly mentions the existence of a 'New Year's Ceremony', a 'Memorial Service for Deceased Members' (in June) and a 'Brief End of year Ceremony' but neither describes nor analyses such rites in depth. Abegglen (1973:140) briefly mentions religious rites, noting that almost all large factories possess their own shrine and give a day's holiday to celebrate its festival. He also gives one brief example of a rite at a mining company but without any analysis of the practices or any discussion of the attitudes of the participants towards such rites.

There are at least four principal reasons for this omission. One is that the topic was peripheral to the authors' main interests (focussing on economic organisation and social structure in particular), another is that the

---

(1) I have not yet been able to find any studies on the topic in Japanese either.

degree to which such rites are found may vary according to the type of industry and a third is that (with the principal exception of Rohlen) the researcher's fieldwork did not always cover the full year's ritual activities in which the New Year's period is especially important. A fourth factor is that if the firm is anything like Nissei most of the workers know little, if anything, about even the existance of most of the religious rituals connected with their place of work. Those who do know about the rites are those in senior positions in the firm, whereas the majority of employees know nothing at all about the religious involvements of their company.(2)

This is borne out by an analysis of the replies to an open-ended question at the end of the questionnaire about religious rites at the company. The vast majority of respondents (85.4%) either wrote 'none' or left the question blank. Only 39 people replied to the question (3)

---

(2) This phenomenon might be related partly to insider/outsider distinctions whereby even the employees who have become 'insiders' by entering the company only gradually in the course of their careers begin to learn about the religious aspects of company life. There may be some interesting comparisons here with the Freemasonry, for example, which on the outside purports to be largely a kind of social club but as one progresses up the hierarchy further occult secrets are imparted.(cf. Jones 1967:152 and appendix)

(3) Three others replied to the second part of the question about whether all have to participate in the rites, replying "No" or "I don't think so" but not specifying which rite they had in mind.

including two wives who filled in forms instead of their husbands[4]. Taking these 39 replies according the rank in the company of the respondents (or their husbands in two cases), a pattern emerges whereby only the managers know about some of the more specifically 'religious' rites, whereas the foremen and blue-collar workers seem to be 'scraping the barrel' to think of anything at all 'religious.' Some of them came up with 'the Christmas party', as a reply but even then one of them commented on the form that it is 'not a religious event.' One blue-collar worker could only think of some individuals' New Year shrine visits to the shrine at the top of Sakurano hill: some shataku residents chose to go there simply because it saved them from drinking and driving at New Year, whereas the majority went by their own or public transport to one of the more prestigeous, larger shrines around the city or in Kyoto.

In assessing the numbers who responded to the question, it should be borne in mind that the majority of shataku residents are foremen or Kakaricho ('chief clerks'),[5]

---

(4) Since a number of the wives used to work for Nissei before marriage, their viewpoint may also be valid. These two replies were 'a Christmas party' from the wife of a foreman and 'Sakurano Inari shrine worship' from the wife of a Kakaricho ('chief clerk')

(5) 'Chief Clerk' is the definition given by Kenkyūsha's dictionary (1954:667) but it really means an 'official in charge' with a slightly higher rank than foreman (shunin). These Kakaricho are not merely administrators but people of this rank are found in all types of departments, including those involved in production.

the former living in the 'A' and the latter in the 'B' apartments. By the time men are promoted to kachō or buchō level they are moving out to buy their own homes; some who are at present living in shataku accommodation have previously bought a house elsewhere but on transfer to Ueno city have had to live in shataku again.(6) Table 12.1 therefore lists the proportions of respondents to this question according to their position in the company and Table 12.2 tabulates the replies of those who did respond, according to the types of rite they know about.(7) It is apparent that awareness of the rites increases in proportion to promotion up the company hierarchy.

---

(6) There also appears to have been some reticence among those who knew about the rites to admit to their existence. At least two men who regularly participate in these rites denied their existence on the questionnaire: one left the question blank and the other wrote in 'none'. A desire to play down the religious aspects of Japanese factory life among the participants themselves may also account for the lack of mention of such rites in other studies of Japanese factories.

(7) At least one buchō and one kachō who live in this shataku but are away all week in the Tokyo area on a tanshin-funin system did not report rites because they do not participate in them.

TABLE 12.1

RESPONSE BY HOUSEHOLDS TO QUESTION ON RELIGIOUS RITES IN THE COMPANY, COMPARED WITH REPRESENTATION IN SAMPLE AS A WHOLE.
(WIVES' REPLIES ARE INCLUDED IN TWO HOUSEHOLDS WHERE THE HUSBAND DID NOT FILL IN A QUESTIONNAIRE.)

	Number of Households in whole sample	Percentage of group relative to the whole sample	Households responding to company rites question	Percentage of respondents in each group
Departmental Managers (Buchō)	5	2.0%	2	40%
Section Managers (Kachō)	22	8.7%	9	40.9%
Kakarichō ('Chief Clerks')	94	37.1%	12	12.8%
Foremen (Shunin)	101	39.9%	13	12.9%
Blue-collar workers	31	12.3%	3	9.7%
Totals	253		39	

TABLE 12.2

RELIGIOUS RITES REPORTED ACCORDING TO STATUS IN THE COMPANY. (MULTIPLE ANSWERS ARE INCLUDED.)

	Buchō (Departmental Manager)	Kachō (Section Manager)	Kakaricho (Chief Clerks')	Shunin (Foremen)	Blue-collar worker
Personal shrine visit at New Year					1
Christmas Party			1	3	
Jizō Bon		2	1	1	
Jichinsai for a new installation or building:	2	4	2	3	1
'Anniversary of Company' prayers (8):				2	
Sakurano Inari worship		2	6		
'Prayers for safety' (8)	1	1	2	2	1
New Year prayers for safety	1	1		2	
Hatsu-uma sai	1	2			
O-hitaki	1				
End of year 'Big Purification'	1	2	1		
Yama no Kami Reisai	1				

(8) For each of these the following category is more specific and is most likely referring to the same event, but those lower down the hierarchy tend not to know the official names of the rites or of the company shrine.

From conversations with employees of other Japanese firms it appears that the following Nissei rites are not atypical of major Japanese businesses:

(i) An end of year purification performed by a Shinto priest,

(ii) New Year safety prayers,

(iii) Prayers for prosperity on the first Day of the Horse in February (Hatsu-uma sai).

(iv) Rites at the company shrine on the anniversary of the founding of the firm,

(v) Calling in a Shinto priest to perform a jichinsai rite to pacify the god of the vicinity whenever a new building is erected or a new machine installed,

(vi) The purchase of mamori safety charms each year for all company vehicles,

(vii) Preservation and maintenance of printed prayer plaques (fuda), generally for safety, in office buildings.

In addition, the following Nissei rites may be specific to this firm or may have parallels or variants elsewhere:

(i) Calling in a Shinto priest to open up the judō and kendō halls for another year by a purificatory rite each January,

(ii) Prayers to the tutelary god of the hillside on which the company housing is built,

(iii) An annual pilgrimage to a temple dedicated to the god Fudō (a god of fire) in order to pray for safety from fire; this practice was initiated after one of the Nissei dormitories for unmarried men was burned down in 1955.

(iv) Visits twice a year to present offerings and prayers at the graves of both a former managing director of Nissei and of an Italian engineer (a specialist who helped set up the Ueno plant) who committed suicide at the factory in 1927.)

(v) Distribution of foods to the wild animals living on the hillside on which the shataku are built because the animals are thought to be embodiments of the gods who protect the ancient graves on the hill. This distribution takes place each year during the Bon holiday in August when the ancestors are said to return temporarily to this world.

(vi) Monthly offerings and prayers at other graves within the factory precincts itself.

The bulk of the present chapter will consist of an ethnographic description of these rites, followed by an analysis of the attitudes and beliefs expressed by the participants concerning these rites. Almost all of the rites have an overt purpose relating to 'safety' but some also display manifestations of other 'key themes' such as 'memory' or 'purity and pollution'.

The man primarily responsible for these rites is Mr. Ōishi of the General Affairs Department, whose work includes also other responsibilities of that department besides religious ceremonies. At home Ōishi-san has a Kamidana, which he bought himself when he married (9)

---

(9) That is, he neither inherited the Kamidana from his parents nor did he receive one from them as a gift.

because he considers that teaching respect for the gods is one of the responsibilities of parents towards their children, at the same time inculcating an attitude of gratitude towards the gods among the younger generation. He prays for safety and health for himself and his family, but not as a daily rite - just on national holidays (Saijitsu), when he buys flowers to offer to the gods. Although in his opinion kami and hotoke are the same, the deity to whom he addresses his prayers is the Sun Goddess, Amaterasu Ōmikami, the mythical founder of the imperial line. This is the only instance in all the interviews that this deity was specifically named as the object of personal devotions. Whether Ōishi-san is particularly more 'religious' than others or not is impossible to assess objectively, but he certainly is on the 'religious' side of the 'religious' to 'non-religious' spectrum. Since those who originally chose him for this job are no longer at this plant (and to some extent the ultimate decisions may have been made at the head office in Tokyo) it is impossible to assess whether his 'religiosity' is a cause or a result of his being chosen for this work, but it seems likely to have been a predisposing characteristic fitting him for these responsibilities. Another influence may have been the fact that he is from a village in the same prefecture, just outside Ueno, and is familiar with local history and traditions.

However, the man who acts as 'Master of Ceremonies' for the company rituals, announcing the order of events and telling the participants when to bow to the deity, is Mr. Nishihara. As the section manager in charge of Business Affairs, he is more senior than Ōishi-san and has been in the General Affairs department for 30 years. At home he has a Butsudan before which he prays each morning and evening, calling it a part of his "own philosophy." His role at the company rites, however, is a relatively minor part of his usual work and most of the practical arrangements for the rites are organised by Ōishi-san.

The end-of-year Great Purification (Nenmatsu Ōharaishiki)

Most rites at the company emphasise either safety or purity versus pollution; the latter is particularly conspicuous at this purification rite, but the former is more predominant in other rituals. This purification is held on the final working day of the year,(10) but the choice of that day is also determined by reference to whether or not it would be an auspicious one for the rite by the Taian /Butsumetsu (etc.) system. (Ōishi-san keeps an almanac to check such dates for each rite.(11))

---

(10) In 1983 this was the 29th of December.

(11) Only the ceremony for the anniversary of the founding of the company, on the 16th of April, is a fixed date each year.

At 8.20a.m. the morning exercise routine is broadcast over the factory's loudspeaker system and almost everyone participates to some extent, even if only perfunctorily. Work begins at 8.30a.m., but on the day of the Ōharaishiki all the company's higher executives (from Buchō upwards to the plant director,) or their deputies, plus representatives from the company union, making about 50 people in all, assemble in a reception room on the second floor of the administrative building (just above the personnel office). There an 'altar' with a wide variety of offerings - 'tai' fish, apples, carrots, sake, rice and satsumas(mikan) rice cakes (Mochi) and sakaki branches - had already been set up by Ōishi-san and some colleagues from the General Affairs Department. To the left of the altar (from the viewpoint of the participants) a long strip of cloth (o-tobari), over 12ft. long, had been suspended between and over two upright stands, a few feet apart; sacred rope (Shimenawa) surrounding it makes it equivalent to the precincts of a Shinto shrine (Shin'iki). The symbolism of the cloth is that it provides a soft landing place for the deity when he comes down to this locality which is temporarily transformed into a sacred place through the performance of this ceremony.
"Normally the god is not present in this part of the factory," explains Ōishi-san. Similarly, the table used for the offerings becomes sacralised too (although it is used for 'non-religious' purposes only in the course of other formal ceremonies), whilst the wooden offering-stands are used for 'sacred' purposes only.

All the participants take their places in rows facing the dais (the plant manager and other leading executives in the front row) when the priest from the Shinto shrine virtually opposite the factory's main gate arrives in the room dressed in his ceremonial robes. He proceeds to the front and takes his seat to the right of the dais, while Mr. Nishihara stands to its left. Nishihara-san then announces the first phase of the rite, which involves the priest going to the front, bowing to the dais and reciting a prayer for the god to come. All the Nissei participants stand solemnly, most of them with their heads bowed and eyes shut for most of the ceremony. Nishihara-san then announces the next phase of the rite, involving the priest taking the wooden gohei stick, to which is attached white paper streamers (and which has been placed in readiness on the dais, along with the offerings by Ōishi-san); first he waves it three times over the offerings and then as Nishihara-san commands "Rei" - "worship/bow"- all the participants bow while the priest waves the wand over them in three broad sweeps. This act 'purifies' the offerings and the people. Replacing the stick with solemn bows to the dais and then returning to his seat for a moment, he waits until Nishihara-san announces the next step in the proceedings. Then standing up again he takes a scroll on which a norito prayer(12) is inscribed and chants it, facing the dais, asking for all the sin and pollution in the

---

(12) Norito is the term for Shinto prayers generally and may consist of many types (thanksgiving, supplication etc.) Normally they are in classical Japanese, so most participants do not know what is said.

place to be driven out and cast into the depths of the sea. This first part of the ceremony lasts for almost 10 to 15 minutes.

The main part of this rite then follows. This involves the priest holding up two strips of cotton cloth (nunosaki) each about 12 to 18 inches long which he has brought with him and each of which he had previously folded into two lengthways.(13) Taking a pair of scissors he makes small incisions along the folded edges of the cloths, a little over 50 cuts in all, (25 or more to each cloth) in order that there would be more then enough to represent each participant in the ritual. They are laid over two wooden offering stands which are picked up and carried around the participants by two assistants from the General Affairs section. They offer them in turn to each participant, who each solemnly blows onto a portion of the cloth and then rips it from the incision to about halfway down its width. The symbolism of this is that all his sins and pollutions (tsumi to kegare) of the previous year are supposed to have been transferred to the cloth by the act of blowing on it, and are taken away in the cloth. When the cloths have been passed around the whole group, the priest takes them back, packs them away in his bag, and performs some concluding bows to the dais, all the participants also bowing again as Nishihara-san commands "Rei". The priest takes the cloths

---

(13) The only reason for there being two cloths instead of one is simply in order to speed up the process, so the men can return to their work sooner. This use of two cloths seems to be a later modification from an original use of one cloth.

with him to the shrine, where on the 15th of January they are ritually burnt along with the various used charms which worshippers at that shrine return to it at New Year.

This whole ceremony lasts about half an hour, finishing at 9.00a.m., when the factory manager gives a short speech wishing everyone a good holiday and New Year; all the executives and union representatives then disperse to their places of work. The priest is presented with an envelope containing 15,000 yen, his standard fee for such services to the company.

Later Ōishi-san explained the symbolism of the ripping cloth as just one variant of common types of ritual prayers which may involve the destruction of the ritual object, comparing it to the burning of gomagi, pieces of wood inscribed with prayers which are said to ascend to the gods in the smoke. According to Ōishi-san, the cloth represents both individual sin(by each person ripping one strip) and collective sins or impurities by the fact that the cloth is still joined at the edges and is burnt as one unit. However, the anthropologist might speculate on whether the ripping of the cloth contains other symbolism, as suggested by the parallels between this and rituals in other cultures involving the ritually wounding, killing or destruction of scapegoats or other sacrifical animals in order to carry away the sins of others. Although the sacrifice of animals is

not found among the Japanese, a very similar meaning and process of destruction is presented in this purification ritual.(14)

New Year

Over the New Year period is a company holiday, but the plant manager, Mr. Ueda, the General Affairs buchō, Mr. Ōkura, and Mr. Nishihara, the Business Affairs kachō, all go together to the principal shrines in Ueno City. It is a company "custom" for those in these three positions to perform these rites each year, irrespective of who is in these posts. The men only go on this tour, however, their wives remaining at home.(15) The wives are excluded on the grounds that these shrine visits are in fact company rites and are performed by these men in their official rather than private capacities. The firm provides a company

---

(14) This particular ritual is possibly a local one, although I have been unable to question participants at purification ceremonies in companies elsewhere in Japan. Even if it is a local type, it is likely that variants will be found in other areas, especially now that Shinto priests are trained at the same Shinto institutions on a national basis.

(15) Mr. Ōkura's family live in Kamakura in the Tokyo region because his son has been taking university entrance examinations and do not want to risk moving his school at this critical juncture, so Mr. Ōkura lives in company dormitory-type shataku as part of the tanshin-funin system. His wife and son came down to the Ueno area for New Year, however, but went to the Kitano shrine in Kyoto on New Year's Day to pray for the son's success in his coming examinations. (He still failed and had to repeat them the following year.) As 1983 was the first year Mr. Ōkura was General Affairs Manager he felt obliged to participate in the local rites with the other two men but the following year he joined his family in Kamakura instead.

car and driver for them and their contributions to the shrines are also paid out of company profits and are tax-exempt because they are included in the category of 'entertainment fees' in the firm's tax returns.

At 10.00a.m. the three men assemble at the Sakurano shrines and visit in turn each of the five shrines on the hillside, commencing with the main Nissei Inari shrine. They then go on to the largest shrine in the Nishiyama side of Ueno (located in one of the older areas on the way towards the city centre), where they give an offering of 10,000 yen (almost £30). Continuing on through the city centre and beyond they come to the Ueno Jingū, the largest and most prestigious shrine in the city, where they give a contribution of 20,000 yen (almost £60). By the time they had finished at the shrine it is lunchtime, so they go to the most famous hotel in the city to have lunch between 12.00 and 1.00 p.m. After that they drive back to the factory where they visit the Nishiyama shrine which is almost opposite the factory's main gates. Here they again present an offering of 10,000 yen, but all these gifts are from them as representatives of the company, not as individuals.(16)

---

(16) These first gifts of money to a shrine at New Year are called "Hatsu hōryō" formed from the characters for "first", "stalk of rice" and "amount", so roughly equivalent to "first fruits" (of the year), though in this context they are not harvest but New Year offerings.

At each shrine they all pray together for "security and happiness for the company and all the staff", according to Mr. Ōkura, but may at the same time pray in their hearts for their own families too. They finish the round of shrines by 1.30p.m. when they disband each to their own homes, the Ōkuras catching the next bullet train back to Kamakura.(17)

NEW YEAR (SAFETY) PRAYERS (NENTŌ KIGAN)

At 8.15a.m. on the first working day of the year(18) two members of the firm's General Affairs department arrive at the company's Inari shrine on Sakurano hill. They both bow to the altar, clap their hands together and pray silently for a few seconds. One of them later explains that he prays for the safety during the coming year of both his own family and of Nissei employees generally.(19) The two men then

---

(17) The anthropologist was unable to observe these prayers personally so this account is based on information supplied by Mr. Ōkura.

(18) In 1984 this was the 4th of January.

(19) His words in describing his prayer are "buji ni sugosemasu yō ni oinori shimasu", Buji ni being a common expression for"safely."

remove any offerings left over from the New Year [20] now beginning to decompose a little, replacing them by a few fresh offerings of satsumas and vegetables. They then sweep up the fallen twigs and leaves around the shrine's precincts, wash down the stonework and set up a wooden container of fresh water with a long-handled ladle next to it at the entrance to the shrine. Everybody is ready by 8.45a.m., when two minibuses and several company cars arrive, containing all the higher executives from buchō level upwards plus the members of the factory's safety committee. Assembling outside the shrine, a number exchange formal greetings, with bows, for the New Year before they all line up to pass one by one through the entrance portal (torii) of the shrine. As they do so, one of the two men who had cleaned up the shrine ladles out water and pours it over the hands of each participant in turn, the symbolic washing and purification before one prays

---

(20) Several of those living in the Sakurano shataku also visit this shrine at New Year, but most prefer to go to the larger and more prestigious shrines elsewhere in Ueno. Those interviewed who had visited the Sakurano shrine said that they chose it mainly because it was near and they could walk to it rather than driving at New Year when they (or other drivers) may have had too much to drink. Even though they might choose to go to the company shrine, however, they pray at New Year for their own family and fortunes and not specifically for that of the firm.

at a shrine. The other man hands out paper towels which, once used, are deposited in a bin also specially provided for the occasion. The participants line up inside the shrine in four rows of 12 to 15 people in each row, all facing the offering table and 'altar' area. Mr.Nishihara stands to their left and when all are ready he announces "Now we are going to pray for the safety and prosperity of our factory this year."(21) Then all in unison bow twice towards the altar area (containing behind the offerings the symbol of the fox deity.(22)), clap their hands once and then bow once more. Nishihara-san then declares the prayer ceremony (Kigan shiki) to be over, and the group begins to disperse, many of them chatting informally among themselves; all return to the waiting vehicles which take them back down to the factory.

Although Nishihara-san includes the element of 'prosperity' as well as 'safety' in his announcements, the element of safety is emphasised in particular by the fact that the members of the factory's safety committee are present for these prayers only and not for any other rites. It also appeared from interviews with some of the participants afterwards that they tend to associate almost all these rites principally with safety, and sometimes with purification

---

(21) "Kotoshi no kōjō no anzen to han'ei o oinori shimasu"

(22) No one knew what the actual go-shintai (symbol of the deity Inari) actually is, because it would be sacrilege to look.

(the end of year purification in particular), but only secondly with prosperity. The attitudes of participants will be discussed in a later section because they tend to have a uniform attitude to all the rites rather than distinguishing too much between them.(23)

After these New Year prayers, the buchōs and members of the safety committee join all the kachōs of the factory at about 9.00a.m., all together assembling in a large reception room containing over 20 tables, on each of which have been placed several glasses, a few bottles of sake and some light snack food (crisps and satsumas). The factory manager, Mr. Ueda, then formally welcomes everyone and expresses his New Year greetings, after which all listen to a taped message from the Nissei company president (who is based at the head office in Tokyo). He encourages them all to lay special emphasis on marketing and growth during the coming year, by devoting all their best efforts to these.(24) This year is the 58th anniversary of Nissei, so they want to significantly improve the firm's overall economic performance by the time it celebrates its 60th anniversary in 2 years time. At the same time the public image and internal 'corporate identity' of the company should

---

(23) Distinctions are of course made in terms of the official purpose of the rites and the membership of participants, but not in terms of individual attitudes to the rites in general.

(24) He uses the verb ganbaru, 'to do one's best', stick it out, persist in, etc.'

be emphasised or improved too, the president says. His speech is followed by a short speech from the plant manager, Ueda-san, consisting of a general 'pep-talk' - including special mention of promoting safety in the factory - followed by a toast. The formal meeting then being over, everyone begins to chat informally and to finish off their drinks and snacks before going outside to watch the '<u>Hatsu-ni</u>' ('first cargo') ceremony.

This ceremony has no 'religious' content, as far as can be determined; it commemorates the dispatch from the factory of the first goods of each type to be sent off that year, although they were in fact made the previous year. The goods will be taken as far afield as Gifu or Hiroshima, though many will go to more local cities such as Osaka. A line of lorries has been decorated specially for the occasion with garlands of plastic flowers and streamers; a few bear pictures in front of their radiators depicting the animal for that year, such as a dog in the year of the dog (1982). The trailer part of each lorry is covered with a tarpaulin but boards attached to the side of the trailer bear, in printed style characters, both the name of the company and the name of the particular product being carried by that vehicle, whether nylon or optical products or ecseine. The company executives from <u>Kachō</u> level upwards mostly stand to the left of the road through to the factory to the main gate, because on that side is the building where they have just listened to the speeches and drunk their sake, while on the opposite side of the road, in front of the factory shop selling Nissei products, stand the blue-collar workers who had made these

representative goods. Both groups stand between the front lorry and the factory gate. As the first lorry (containing nylon) starts up and passes between the two groups, all the assembled spectators raise their hands in unison and cry "Banzai" three times, after which they all begin to clap while each of the lorries in turn passes them and proceeds out of the factory gates. After the last lorry had disappeared out of the gate, the spectators disperse to their respective offices, a few exchanging formal bows and greetings for the New Year as they meet for the first time after the holiday.

These three successive ceremonies on the first working day of the year depict two major distinctions in the nature of the rites and of the participants; that between 'religious' and 'non-religious', and that between upper management and workers. It is only the upper management plus members of the firm's safety committee (who are in several cases of kachō rank anyway) who participate in the overtly 'religious' ceremony at the company shrine.(25) Middle management (kachō) are invited to listen to the President's speech and to share in the drinks and snacks, but blue-collar workers only participate in the Hatsu-ni ceremony as spectators - who are spatially segregated from

---

(25) 'Religious' here is justified by the associations with the shrine and prayer, but there is no evidence that the Hatsu-ni is in any way 'religious'. As mentioned in the introduction, the term 'non-religious' is to be preferred to 'secular' because of the latter's connotations of a decline in the 'religious' sphere.

the management group - or as drivers of the lorries. At the formal commencement of work at 8.30a.m. that morning they had also listened to a taped speech from the company president, but it appears as if the content of the tape was a little different from that heard by the senior management; the blue-collar and lower white-collar workers hear exhortations to have the right frame of mind (kokorogamae), encouragements to have a positive attitude to their work, and some outlines of company plans or policies (hōshin) but the message to the kachō and buchō, though still framed in fairly general terms, is a little more specific about areas which the company needs to emphasise. Therefore, participation in the 'religious' aspects of company life is limited to senior management in particular and to a few others who may participate in certain rites in their official positions as members of the factory's safety committee, union representatives or representatives of the Sakurano jichikai. The involvement of these other people will be detailed in the following descriptions of other company rites. It should be noted, however, that their involvement is as representatives of a group, not as individuals; it is enough for one representative to participate even if the members of that group are often unaware of even the existence of the rite.

All participants have their hands ritually rinsed before entering the shrine precincts for the Yama no kami reisai.

During the Yama no kami reisai representatives from the local neighbourhoods offer sakaki and prayers on behalf of those in their wards.

Annual 'feast-day'[26] of the 'God of the Mountain'

(Yama no kami reisai)

This rite is held on or about the 9th of January each year, the festival date for the god of the Sakurano mountain, the nearest auspicious working day is chosen for this, as for the other rites. The shrine dedicated to this deity is located on a small fenced-in grove at the base of the Sakurano hillside opposite the West Gate of the factory, and is at least several centuries old. A simple, unpainted wooden torii marks the entrance to the grove and in the middle of the grove, demarcated by sacred rope (shimenawa) and surrounded by another fence, is the tree in which the deity is supposed to reside. This is a female deity whose speciality is granting fertility to childless couples: however, being female, she is said to pay attention only to her male devotees and not to the petitions of other women. Hence all the participants in this rite are male.[27]

Before 9.00a.m. on the morning of the rite Ōishi-san and two other members of the General Affairs Department (the same ones who had cleaned up the Inari shrine for the safety prayers five days previously) come to the shrine.

---

(26) The translation of reisai ('annual festival') is here modelled upon Roman Catholic 'Saints days'.

(27) This is partly because those at buchō level are all male anyway, but the Sakurano jichikai representative is specifically designated as a male representative for this rite (in the published list of rites circulated to all participants), as compared with the Hatsu-uma rite in February at the other Sakurano shrines, where both a male and a female jichikai representative take part.

They set up a table just in front of the sacred tree's protecting fence, facing towards the torii at the entrance and on it lay offering stands containing Tai fish,[28] rice cakes (mochi), rice, sake, carrots, satsumas, giant radishes (daikon) and cuttlefish. On a separate table to the right as one looks from the torii they lay branches of sakaki, the sacred tree of Shinto, each with white sacred paper streamers attached, and put a chair next to this table in readiness for the Shinto priest. His gohei wand for the purification ritual is also placed in readiness in its separate stand on the table. Two other tables, each covered with white cloths, are set up to the right of the entrance way (before the torii), on one of which individual bags of satsumas (5 in each bag) are arranged as parting gifts for each participant. The other table next to the entrance is to be used as a place for the guests to leave any bags or coats.

Meanwhile, Ōishi-san prepares a bonfire in the corner of the precincts to the left of the entrance. At the base of this he sometimes places all the safety charms (mamori) and prayer plaques (fuda) from the previous year which had been placed in all the company cars and most factory

---

(28) The tai fish is commonly used for celebrations, and the same character and reading is used for writing the latter part of the word 'medetai' ('a happy or auspicious occasion', cognate with the word for 'congratulations')

buildings[29] although on some years he takes these to the shrine where he goes for his personal New Year's visit. (At the New Year he had bought, at company expense, replacement charms and plaques - the former from a shrine specialising in traffic safety and the latter from a shrine in Kyoto famous for the protection of buildings.[30]) Above these he places logs of wood and then lights the fire: the used charms are thereby burnt in a sacred place rather than being 'defiled' by being thrown out with the regular rubbish. In the January cold weather the bonfire also had the practical purpose of providing some warmth for the participants, the first of whom begin to arrive before 9.45a.m. By the time they arrive, Ōishi-san and his colleagues have also filled some buckets of water (to douse the bonfire after the proceedings are all over) and have also filled the purification hand-washing container which is set up to the left of the entrance.

The first to arrive are the local jichikai heads, representing the older areas around the hill and the factory - but not Aoyama, which is presumably felt to be distinctly separated from the deity's jurisdiction by the motorway and railway track and is a new estate anyway. After having their hands rinsed at the entrance (in the same manner as was done for the New Year prayers) they then proceed to

---

(29) Such fuda are also found in most offices, including the General Affairs office where Ōishi-san is based.

(30) Other fuda, for those rooms where fire is used, are bought when they go to visit the Fudō temple.

warm them up at the bonfire. Apart from a few greetings, they mainly remain silent, partly from not knowing one another and partly because this is the first time each has attended this ritual so they do not know what is expected of them. At 9.50a.m. the middle-aged son of the former landlord from whom Nissei had bought the factory site arrives, enters the shrine and joins the others already waiting. Having been regularly invited to this rite for many years he is more relaxed than the jichikai representatives and talks a little with some of the Nissei officials who are beginning to arrive at the same time. Again all are of buchō level or higher except for the union and jichikai representatives and the kachō in the General Affairs department who are also expected to participate in this rite. All are present by 10.00a.m. when the priest of the Nishiyama shrine arrives (in a company car), dressed in full regalia, and proceeds immediately to his allocated seat to the right of the offering dais. Nishihara-san then starts to call out the names of the jichikai representatives, the landlord's son and the plant manager, each of whom lines up in the front row facing the offerings. All the other participants then form rows with no pre-determined placings between the front row and the torii. The men who prepared the precincts beforehand and the official Nissei photographer(31) (who had

(31) The photographer is a woman but she only observes and takes photographs from the side. She does not take part in the prayers, all those praying being men.

arrived shortly before 10.00a.m.) remain beside the bonfire in an attitude of silent respect, though the photographer sometimes walks up the side to take photographs of the events.

Nishihara-san then briefly explains the purpose of the rite - to invoke the blessing of the local god upon their neighbourhoods and the factory. The priest then stands up, proceeds towards the offering dais, bows to the sacred tree behind it, and begins to chant; the others meanwhile all stand with their heads bowed in apparent solemnity, but a few occasionally raise their heads and glance around to see what is happening.

The priest's chanting lasts only a few minutes, then he claps his hands twice, bows again to the sacred tree, and, taking up the gohei wand, he waves it in the usual act of purification over the offerings and the assembled participants. Replacing it in its holder, he gives another formal bow to the tree, then returns to his seat as Nishihara-san calls out "Rei", on hearing which the whole assembled group bow in unison towards the tree.

The priest then returns to the offering dais with the text of the Norito prayer in his hand, which he proceeds to chant while the participants stand solemnly with their eyes shut, a few briefly looking up occasionally. They all open their eyes once the priest has finished chanting. He then returns to the table on which the sakaki branches had been laid, takes one of them and brings it to the dais, to offer to the god with bows and handclaps. He returns to the sakaki table while Nishihara-san announces the name of the local landlord's son, who steps forward, receives a branch of

sakaki from the priest, takes it to the dais, bows, places his sakaki offering on the stand in front of the tree, bows twice, claps his hands twice, bows once more and returns to his place. The same procedure is repeated in turn for the Nissei factory manager and each jichikai representative, 8 people in all. However, when the factory manager bows and claps all the assembled Nissei officials simultaneously bow and clap too, which they do not do when the others present their offerings (because the others represent different areas to which the Nissei officials do not belong.) When all eight have presented their offerings, Nishihara-san again declares "Rei" and all the participants bow in unison. The ritual is then over and the group disperses, the priest leaving immediately in a specially designated company car.

Most Nissei employees leave almost immediately to return to their work at the factory, a few first warming themselves by the bonfire or chatting for a few minutes in small groups. As each leaves he is presented with a bag of satsumas by one of the men who had set up the offerings and tables at the beginning, so that soon only the principal participants remain by the bonfire talking, some smoking and a few now cracking jokes. One of the men in charge of the parting gifts then goes up to the dais and takes from it a stand on which are wrapped boxes containing shio manju (salty bean curd cakes) - a delicacy - and a large bag of rice cakes (mochi) wrapped up in a furoshiki, a coloured cloth sometimes

used for wrapping special gifts.(32) He places these next to the remaining bags of satsumas on the table by the entrance. As each jichikai representative leaves he is presented with a box of shio manju and a bag of satsumas, but the landlord's son is given in addition to these the large bag of mochi. By 10.30a.m. all the participants have left.

Nishihara-san, Ōishi-san and their two assistants remain, however. While Nishihara-san remains by the fire, the others pack up the main offerings (tai fish, rice and vegetables) into a big box to be delivered to the Shinto priest later(33). The table which had been used for depositing the guests' bags is then brought over to the bonfire and the offerings of sake, satsumas and cuttlefish (briefly cooked by being thrown on top of the log fire) are consumed by the four men themselves. They seem in no hurry to return to their office, but do so eventually after dousing the fire.

The opening of the sports hall (Literally: 'the opening of the mirror (rice-cake)': kagami-biraki)

This takes place two days later, on the 11th of January in 1984, commencing at 5.30p.m., when work for most employees officially finishes. The participants include the president of the 'culture and physical exercise committee' for the

---

(32) Furoshikis are also used for carrying things, when they can serve as the equivalent of bags

(33) Meanwhile, the priest has collected his 15,000 yen and returned home.

Nissei works and those committee members responsible for judō, kendō (Japanese fencing) and kyūdō (Japanese archery), the instructors in these sports, each kachō in the General Affairs, Accounting and Production Departments, and all those learning any of the three sports (judō, kendō or kyūdō). All the work's boat team are present also, in addition to the parents, or at least one of them, of each of the Nissei employees' children who are learning one of these sports. The parents attend the ceremony as observers. The same Shinto priest from the Nishiyama shrine performs the ritual.

As each individual enters the sports hall, located in the centre of the factory, he or she is expected to have his or her hands rinsed by an official in the same fashion as if they were entering a shrine. All queue as a Nissei official performs the purification rite, which is also administered to the Shinto priest when he arrives. Inside the judō hall an offering dais has been set up at one end on which are sake, satsumas, carrots, giant radishes, cuttlefish, beer and a large rice cake (kagami-mochi) similar in style to those set up in private households at New Year. However, behind the offering dais in an alcove of the wall is a regular Kamidana, so this is already a 'sacred place' and no o-tobari 'safety curtain' is required for the deity to fall into. Another Kamidana is in an alcove of the kendō hall next door, facing which many children aged from 8 to 12 are already sitting in rows before they begin their practice. However, when the Shinto priest enters the judō hall, the message is passed through to them that they are to all assemble in there, so all come through quietly.

Meanwhile, under Nishihara-san's instructions, the leaders and instructors for the respective sports line up in three rows facing the offering dais, and the kachōs of the General Affairs, Accounting and Production departments line up behind them, with the officials from the works' culture and exercise committee. The teenagers and younger children learning the respective sports line up behind them, their parents crowding along the rear wall behind them. Age seniority is strictly observed, with the older children in front of the younger ones.

Nishihara-san announces the beginning of the ceremony. The priest comes to the front, bows three times to the Kamidana and begins to chant. The adults remain in a solemn attitude of apparent reverence, the teenagers stand quietly and many of the younger children stand solemnly but others shuffle, laugh and look around. The priest then claps twice and bows once, picks up the gohei stick and performs the purificatory o-harai (3 formal waves of the pole) over the Kamidana and then over the participants. Nishihara-san announces the next stage in the rite, then commands "Rei" and all bow. The priest goes up to the offerings, removes the lids from the sake cups (so the deity can smell or drink it) and retires to his seat.

Nishihara-san announces the next stage, one type of norito; the priest comes back to the front, bows twice, reads and chants the norito, while the men stand solemnly with heads slightly bowed. The priest then gives two deep bows, claps twice and gives two further bows - one deep and the other shallow - before he returns to his seat.

Nishihara-san announces the next stage in the rite, and two men (those who had prepared the shrine princincts for the yama no kami reisai two days previously) take a table to the front, on top of which the large kagami mochi is laid. Another pedestal on which a sharp knife has been laid is placed next to the mochi, the priest makes a slight incision into the mochi, and then the mochi and knife are returned to the offering table. This symbolises the splitting of the 'observing self' described by Benedict (1946:288-9) whereby the aim of the martial arts is to achieve such perfect unison between thought and deed that one no longer reflects on what one is doing. Kagami means 'mirror' and the rice-cake is shaped like the curved mirrors of the Heian period; splitting the mirror therefore means removing the 'observing self'.

After Nishihara-san announces the next part of the ceremony, the priest takes a sakaki branch (with white paper streamers attached) from the side table next to his seat, places it onto the main offering table, bows twice deeply, claps twice, bows once deeply and once shallowly and returns to the sakaki table. The leaders of the four sports each in turn receive from the priest a branch of sakaki and offer it in the same manner as described for the priest. As each bows and claps, the respective groups of participants for their sport lined up behind them (including any in other groups who are learning that sport in addition to another one) bow and clap simultaneously. After each representative has offered his sakaki and returned to his place, the priest

returns to the front, replaces the lids on the sake jars and bows once without clapping. Nishihara-san then commands "Rei", all bow and the ceremony is over. The priest then turns to the assembled group and says a few words of thanks and greeting.

It is now almost 6.00p.m. but there is very little break before the admission ceremony for new children entering these sports. These children line up in rows according to their respective intended sports while all the adults go to the sides. The ceremony commences at 6.00p.m. First, all bow (at the command of "Rei") to the Kamidana. Then the leader of the works' 'culture and exercise committee' gives a short talk to the children for a few minutes on the importance of having the right mental attitude (kokorogamae), frequent, daily practice and 'doing one's best' (ganbaru)(34)

Each principal instructor for the three martial arts then gives a brief talk on the meaning and purpose of that sport and introduces the other instructors by name, who have lined up to the right of the participants, at the front of the room. First the judō instructors are introduced, then the kendō and the kyūdō instructors. As each is introduced, he bows and the mothers at the back of the room all bow back; their young children also give a shallow bow. Then at the end all give a formal bow to the Kamidana at the command of "Rei" and disperse at about 6.10p.m. The Nissei

---

(34) It will be noticed that these are the same 'key words' used in the talk by the Nissei President broadcast to the workers in the factory the previous week.

officials produce boxes each containing two manju - one red and the other white as 'celebratory' (medetai) colours - from the changing room next to the entrance and distribute the boxes to each person who attended the ceremony. After most people have left they start to pack up the offerings to give to the priest (including the cuttlefish this time) but open the bottles of beer to drink themselves.

Annual pilgrimage to a Fudō temple

On the 13th of January 1955 fire broke out in one of the shataku dormitories for single men and destroyed the building. Although there were no casualties from the fire, the plant manager at the time decided to institute an annual pilgrimage to the temple of the god Fudō (the god of fire) in order to pray for safety from fire. This pilgrimage commenced in 1956 on the first day of the year which is allocated to the worship of the god Fudō by the almanacs (koyomi) - a day known as 'Hatsu-Fudō' ('first Fudō'). The first visits to Fudō temples in any year to pray specifically to Fudō himself[35] should be performed, strictly speaking, on the Hatsu-Fudō day itself, but in 1984 this fell on a Saturday (28th January) which is a Nissei holiday.[36]

---

(35) That is, as distinct from general temple visits for 'sightseeing' purposes, New Year observances or ancestral rites (if it happens to be a family temple too.)

(36) Until 1977 Nissei had a half day on Saturday, but the union then negotiated the reduction of the working week to five days; in return they had to concede to a lengthening of the working day by half an hour (till 5.30p.m.), "because", say the shataku residents "Nissei is stingy (kechi)"

Therefore in 1984 the pilgrimage took place on the previous day, Friday the 27th January.(37)

After the dormitory burnt down in 1955, a new factory was built on the site for 'Nissei Products', an officially separate company (with its factory in a separately demarcated compound within the Nissei site) which is a joint venture with an American cosmetics company. Therefore the managing director of Nissei Products and his General Affairs manager also come on this pilgrimage. The route towards the temple is in the general direction of the other Nissei factory in Ueno, and the managing director and General Affairs manager of that factory come too; they join the Nissei and Nissei Products convoy at a previously arranged rendezvous outside a large shrine near the river. The Nissei participants are the plant manager (Mr.Ueda), the General Affairs buchō, (Mr. Ōkura), the General Affairs and personnel section managers (kachō) and two representatives of the Nissei union. All wear wellington boots and heavy winter coats for the trip into the mountains.

The convoy of company cars (including the Nissei Products car) leaves from outside the Nissei General Affairs office(38)

---

(37) It is noteworthy, that this Fudō pilgrimage is not considered important enough to interfere with a company holiday, whereas the New Year shrine visiting for the three top officials in the factory is allowed to intrude upon their New Year holiday.

(38) Part of the General Affairs department is the personnel section and the section dealing with company housing and other fringe benefits; another part of it deals with religious rites but the personnel section manager is expected to attend almost all these religious rites.

at 11.30a.m. Proceeding across the river to their rendezvous with the participants from the other factory, they then take a road away from the city, past the golf course and up into the mountains. Eventually they stop at the junction with a small mountain track, on the very edge of the Ueno city administrative area, where the drivers put snow-chains round the tyres. Then they drive up the mountain track as far as the point where it narrows and is no longer passable by cars. All then get out; the drivers take out from the boots of two of the cars bundles of stout bamboo canes, each about 4ft. long, which they distribute to each person as an aid to keep their grip and balance as they ascend the last stage on foot, a distance of a little less than one kilometre, up a forested mountain path and, in the last stretch, some steep stone steps. Though the final steps have been cleared of snow by the priest of the temple, the earlier part is through snow a few inches thick. The temple itself is 600 metres above sea level and was formerly used by mountain ascetics (yamabushi) for their austerities.(39) It is essentially a two-roomed hut on top of a 10 metre high platform (in order to provide a horizontal base) built out of the side of the mountain just below the summit.

---

(39) For a description of the life of such ascetics and of their austerities see Blacker (1975), especially Chapters 5,9 and 12.

Before ascending the final set of steps to the temple itself, the group passes the priest's house, where Ōishi-san announces their arrival. The older priest sends his two sons (aged in their early twenties and later teens) to do the chanting and prayers; meanwhile most of the group have gone to the top of the mountain and are admiring the view while waiting for Ōishi-san and the priest's sons. A few inspect the outer chamber of the temple (used by yamabushi for their austerities) and the 'Nissei Products' General Affairs manager puts 200 yen into an offering box, puts his hands together and bows his head for a moment. When Ōishi-san and the priest's sons arrive, all proceed into the inner room of the temple(40) and sit or kneel in a row with their hands together while the two young men chant for about 5 minutes. The visitors are then invited to come to the very front of the temple, to the area behind the offerings and images of the god, where the young men point out a large log in the wall which supposedly brought good fortune to a man "long ago", and relate the history of the temple.

It is now about 12.45p.m. All then return to the priest's house, passing on the way a pile of logs chopped up in readiness for the burning of gomagi the following day. In one room of the house a table has been set out, and the priest's wife serves them all with a cooked lunch (rice, fish, pickles, vegetable soup laced with sake, and sake to drink);

---

(40) Their boots are all left outside.

there is relatively little conversation over the lunch table, partly because the men have little informal contact throughout the rest of the year with the other groups represented (i.e. those from the two Nissei plants, 'Nissei Products' and the Nissei Union). The drivers eat separately in another room which is merely a step up from the entrance-way where the boots and bamboo poles were left. In the same room is a counter for the sale of mamori and fuda, one of which the personnel manager (rōmukachō) buys for his own personal use; twenty others are bought by Ōishi-san for placing in those rooms around the factory where fire is used, such as for cooking on gas rings or for gas heating appliances.

In all Ōishi-san pays 45,000 yen (about £140) to the temple. This breaks down as:

Fee for Hatsu-Fudō ceremony:	20,000 yen
"thank offering" (o-rei)[41]:	15,000 yen
20 fudas at 500 yen each:	10,000 yen
Total:	45,000 yen

After lunch, the party returns to their factories and disperse to their normal work.

(41) This is effectively the cost of the lunch. In the course of the prior arrangements and notification to the temple about their planned trip, the temple had indicated that the o-rei should be increased this year in line with the general prices of food.

During the Hatsu-uma sai the Shinto priest performs a ritual purification over all the participants.

At the appropriate times all participants bow in unison towards the area containing the go-shintai.

The 'Hatsu-uma' ('First Horse') and o-hitaki ('fire kindling') ceremonies.

By the former lunar calendar (changed to the Gregorian one in 1872), Setsubun at the beginning of February marked the end of winter, which is also the beginning of Spring and the new agricultural cycle. On the first 'day of the Horse' after Setsubun the 'god of the mountains' (yama no kami) was said to descend to the fields to become the ta no kami or 'god of the rice paddy.' In the autumn, on the last 'day of the Horse' after harvest, and before the official beginning of winter at the beginning of November, the god again ascends to the mountains to become the yama no kami for the winter (see Yanagita 1970). This latter occasion, the 'last Horse festival' (shu-uma sai), was celebrated by Nissei until 1976, when it was amalgamated with the o-hitaki ceremony performed in November on an auspicious day decided by the Fushimi Inari shrine in Kyoto. O-hitaki means 'fire kindling' and refers to the burning of gomagi (prayer sticks), but this is not performed at Nissei. Instead, there is the ceremony of 'satsuma peeling' (mikan-maki) when formerly the participants would peel a satsuma, at the same time blowing on the peel, in the same way as at the ō-harai ceremony, to have their sins and pollutions removed. They would throw the peels onto the fire, according to Ōishi-san's explanation. However, nowadays this has been attentuated to simply the ceremonial clapping of hands before then receiving a satsuma, each participant saying "itadakimasu" ("I humbly receive", words normally said before a meal).

Most participants then put it in their pocket or bag to be eaten later. The symbolism of this is said to be simply one of gratitude to the god for favours received, and in the official explanation sheet distributed by Ōishi-san to all participants there is no mention of any original rite of ceremonial purification of sins.(42) It appears, therefore, that the autumn rite has been attentuated or at least condensed whereas the February rite of 'Hatsu-uma' has been preserved more intact - probably because it is more widely observed by Japanese companies in general and is better known among the public than the shu-uma sai. Moreover, the observance of 'hatsu-uma' seems to fit more with a general Japanese emphasis on beginnings (New Year, inauguration ceremonies, Setsubun as the beginning of Spring etc.) than ends (some exceptions being graduation ceremonies and the year-end purification), especially in the ritual cycle: hence most of the Nissei religious rites are concentrated around the beginning of the year, including those on the Hatsu-Fudō and Hatsu-uma dates.(43)

---

(42) The reasons for the amalgamation of the shu-uma sai and the o-hitaki in 1976 are not clear, but it seems to be a reflection of the attitudes of those who are in authority at the time. The present factory manager Ueda-san, came to his present post in 1983 by promotion from head of the research section, and the General Affairs Manager, Ōkura-san, was appointed in 1982 after being transferred from the Nissei London office.

(43) In practice, it is sometimes difficult to decide if a rite of passage is at the beginning or the end of a cycle, because, like a node in bamboo, it is in fact both. The Japanese terminology, however, in the prefix hatsu -('first') and the greater emphasis on New Year rites rather than end-of-year observances, for example, suggests an 'emic' emphasis upon beginnings.

The Hatsu-uma and o-hitaki rites have become parallel to one another in their actual performance at Nissei, however, so the following description, based upon the Hatsu-uma rite observed on the 6th February 1984, is applicable to both.

The rite begins at 2.00p.m., but the priest of the Nishiyama shrine comes to the personnel office at 1.30p.m., collects his payment in advance, and leaves for the shrine in the company car at 1.40p.m. At 1.45p.m. two minibuses leave from the factory shop, pick up others at the personnel office at 1.50p.m. and proceed on up to the shrine. Those participating are the plant manager, Ueda-san, all the buchōs or their deputies, all the kachōs in the General Affairs department(44), union representatives from Nissei and 'Nissei Products', one male and one female representative for the Sakurano jichikai, similar representatives for the dormitory accommodation and also the Nissei catering manager, Mr.Yoshioka.

The reason for the presence of Yoshioka-san is that behind the main Nissei Inari(45) shrine (founded in 1926) is a smaller Inari shrine dating back at least three or four centuries. This older shrine was built in this location because the hillside was directly in the ura-kimon of Ueno

---

(44) As an indication of the priority of business over religion, it is significant that the General Affairs buchō, Ōkura-san, was unable to attend the rite because of a Finance Committee meeting. Those buchōs unable to attend normally send a deputy, but in Ōkura-san's case that deputy would be Nishihara-san.

(45) Inari is the fox god who has become the god of merchants.

castle; like the shrines and temples on Mount Hiei protecting the kimon of Kyoto from spiritual attacks (Dore 1958:367), this shrine also protected the 'devil door' of Ueno castle up until the castle was destroyed at the time of the Meiji Restoration. For reasons not clearly known now by Yoshioka-san, his grandfather, a wealthy fish wholesaler in the area across the river from Nishiyama, took over responsibility for the upkeep of the shrine. The shrine is now part of the Yoshioka family property, and four stones set into the ground near the corners of the shrine demarcate the land owned by the Yoshiokas. When the Nissei factory was built in 1926-7, the Yoshioka family were given the (de facto permanent) contract to become the Nissei caterers and to run all the factory canteens. At the death of his father Yoshioka-san inherited the Nissei canteen business (as an independent company) and his two younger brothers jointly inherited the fish wholesaling firm. As chōnan, Yoshioka-san also received the family shrine and responsibility for it. The shrine is in fact a 'double shrine', containing two separate sacred stones, and is counted therefore as two shrines. In addition, behind the Yoshioka family shrine is a small shrine to the Wakamiya Hachiman deity (a god of silk production), also with an ancient history, for which Nissei have taken on 'de facto' responsibility (as for the shrine of the 'god of the mountain' at the foot of the hillside.)

At the Hatsu-uma rite all four shrines on the summit of the hill (i.e. the Nissei Inari shrine, the two owned by Yoshioka-san and the Wakamiya Hachiman shrine) are the locations of worship, as compared to the New Year Safety prayers and the anniversary of the founding of the company (April 16th) when only the Nissei Inari shrine is used for ritual purposes. However, on the first of January the three main Nissei managers pray at all these Sakurano shrines and also at another small one behind the shataku flats which was founded as a personal shrine by the founder of this factory.)

When most participants arrive for the Hatsu-uma rite, the priest and principal officials have already entered the Nissei Inari shrine. A bonfire has been lit outside the shrine for the participants to warm themselves at, but they have only a few minutes to do so before they have to line up to enter the shrine. Each passes through the large outer, red torii, then ritually has his hands washed, as for the other rites, and proceeds through the row of 3 smaller red torii to the worship area. The 35 participants line up in 3 rows while Nishihara-san gives a brief explanation about the nature of the rite, the nature of the god Inari, and the connections between this shrine and the main Inari shrine at Fushimi, a suburb of Kyoto. (46) It is now 2.00p.m.

---

(46) The Fushimi Inari shrine in the south of Kyoto sells official mirrors as holy objects for companies to install in their shrines. Apparently there is a growing demand for Inari shrines by Japanese firms (Asahi Evening News 21/5/82, page 3).

and the priest goes to the front and chants, facing the offering table and sacred area containing the symbol of the god, while all stand with their heads bowed. He bows once, claps twice and bows twice, then, taking his gohei stick, he performs the o-harai purification ceremony over the offerings and then the participants as a group by three waves of the wand over each.(47)

At Nishihara-san's command of "Rei", all bow. The priest then removes the lids from the sake vessels, which are one of many offerings, others being tai fish, carrots, apples, rice cakes(mochi), satsumas, oranges and cuttlefish. He then recites a norito prayer while all listen with heads bowed: most listen solemnly with their eyes shut or lowered but not infrquently some of them open their eyes and look round, while a few remain standing with their eyes open all the time. Nishihara-san then announces the next stage in the ritual, which consists of the delegates offering sakaki branches to the deity, the priest offering the first branch. Next is Ueda-san, representing the Nissei group, and as he bows twice, claps twice and bows once more all the Nissei employees do the same simultaneously. When the other representatives bow and clap, however, they do so by themselves, none of the others doing so simultaneously even if they happen to live in Sakurano or be union members. The leader of the company union is the next to make his offering (Nishihara-san announcing the official post of each delegate when it is his

---

(47) i.e. the offerings and then the people.

or her turn). He is followed by the male dormitory representative, the Nissei 'women's division' representative, and then the male and female jichikai representatives for Sakurano. Finally, Yoshioka-san makes his offerings.

Nishihara-san then announces the 'mikan-maki'. The priest takes the stands heaped with satsumas from off the offering dais and hands them to the two men who performed the hand-washing duties (one of them being Ōishi-san). They take the pedestals to each participant in turn, who first bows, claps once and takes the satsuma, saying "Itadakimasu", finally bowing once more. Each keeps his or her own satsuma without peeling it. The two servers hand the remaining satsumas on the pedestals back to the priest who replaces them on the dais. At Nishihara-san's command of "Rei", all bow. This part of the ceremony is then concluded; it is almost 2.30p.m.

The whole group, led by the priest, then files out of the shrine and up to the middle shrine, that owned by Yoshioka-san. In front of this shrine is a line of six closely-spaced red torii, under which pass a row of shallow steps leading to the shrine. All stand, two or three abreast, under this line of toriis because there is insufficient room in the precincts itself for all this group. The priest again chants and claps, again performs an o-harai over the shrine precincts and the participants, and chants further norito prayers. Ueda-san, the plant manager, then goes into the shrine precincts and all the Nissei men together join him in bowing twice, clapping twice and bowing once in unison. Yoshioka-san then stands up in front and faces the assembled

group and gives a short talk on what he knows of the history of the shrine, commenting that he does not know why the 'day of the horse' should be chosen for this ceremony "but that's the way it's always been for the last 800 years or more."

The group then proceed up to the Wakamiya Hachiman shrine at the top of the hill, where the priest bows and claps to the stone symbol of the deity in the same way as most ordinary people do when visiting a shrine and without any o-harai or norito performances. He then bows to all the Nissei participants, who bow in return to him and follow him back down the hill to the vehicles. The priest immediately leaves in the company car which is waiting for him. Ōishi-san is waiting by a table set up next to the main Nissei shrine and distributes small bags of satsumas to all the participants. All quickly get into the vans and cars to return to their work because it is cold outside and is beginning to snow again. They leave Ōishi-san and his helpers from the General Affairs department to tidy up the offerings for the priest and to put out the bonfire.

Anniversary of the Founding of Nissei

Nissei was officially founded on the 16th of April,1926, and on this date each year all the top management of the company, including not only present directors but all former directors still alive, gather for prayers at the firm's Inari shrine on Sakurano hill. Not all bucho are represented but only those who form the board of directors of Nissei, or have been members of it in the past; these include the Nishiyama plant manager (Ueda-san) and the General Affairs manager, (Ōkura-san). They are relatively junior or new

members of the board of directors, and those in the executive committee at the Tokyo head office, including the company president (shachō), rank higher than them. The former directors, now retired, who attend the ceremony are senpai (seniors) to Ueda-san and Ōkura-san, so command respect from these men. In addition, Mr. Mukai (the former union chief who is at present D.S.P. candidate for Ueno and works on the committee of Dōmei[48]) represents the firm's union and participates in this ceremony.[49]

In the week before the ceremony groups of Nissei employees ('peripheral' rather than 'core' members of the firm[50]) trim the grass verges of the road leading up the hillside to the company shrine and clean up the general area of the park nearby. Being April, the cherry blossom is normally in full bloom, so that the trees add to the character of the event.[51] Specially in preparation for this rite, flags bearing the name of the shrine are set up at the base of the hillside where the steps ascend for those going to worship on foot (though for this all the officials in fact come by car)

---

(48) The league of trade unions of which the Nissei union is an important member.

(49) Mukai-san continues to live in the Nissei shataku, however.

(50) i.e. those on shorter-term renewable contracts.

(51) The significance of this lies in the fact that cherry blossom viewing is a national pastime during April with groups of colleagues going after work, or groups of relatives at weekends, to sit under the cherry blossom and 'eat, drink and be marry' together.

and a pavilion is set up just in front of the main entrance to the shrine. A similar pavilion is set up inside the rear entrance of the factory (that nearest to the shrine) and both of these are conspicuous by their red and white stripes - the colours of festival.(52)

On the day before the ceremony, the directors from the Tokyo office and elsewhere arrive in the area and are accommodated at company expense in the Miyako hotel in Kyoto, where the local directors join them for a party in the evening. The following morning they travel out to Nishiyama for the anniversary ceremonies.

By 9.00a.m. on the 16th Ōishi-san and several others are already at the Sakurano shrine and have set up a table covered by a white cloth on which are neatly arranged name badges for all the participants - those now retired (called 'friends of the company') having a red ribbon through their name placards.(53) Two security guards have been posted since early morning at the base of the hillside, where the road to the shrine branches off from that going through the shataku , and another security guard is on watch in the pavilion itself. A telephone has been specially set up in the pavilion to allow urgent messages to be conveyed to the shrine area, and the whole atmosphere in the pavilion is one of tenseness and expectancy because of the top management coming and a desire to ensure all goes well and there are no hitches in the programme. This feeling of tension among

---

(52) Compare, for example, the red and white manju given to those participating in the opening of the sports halls for another year, or the use of rice coloured by red beans on festive occasions such as the symbolic beginning of weaning on the 100th day after birth.

(53) A table behind it is also provided where the guests may leave their baggage during the ceremony.

those responsible for the programme mounts as the higher officials begin to arrive and wait for still more important directors to come. Among the first of the directors to arrive, shortly after 9.30a.m., are Ueda-san and Ōkura-san, but in the ensuing half an hour before the rite begins at 10.00a.m. more and more officials arrive in specially designated company cars which drop off their passengers then encircle the perimeter of the shrine to return to pick up other directors waiting at the factory.

During this time of mounting tension the anthropologist's presence begins to become an embarrassment to those responsible for the smooth performance of the ceremonies who might be held accountable to the top management for the presence of an outsider at this most exclusive of the company rites. First Nishihara-san requests the anthropologist not to enter the shrine precincts themselves "because the top management will be there". A little later, Ōishi-san strongly intimates that it is about time the anthropologist left (before the very top management come) but relents when informed that Nishihara-san, his superior, had asked the anthropologist not to enter the shrine but seemed to allow his presence outside. Shortly after that, Ueda-san (the plant manager) notices the anthropologist and asks him not to enter the shrine precincts "because it will be crowded today with so many people".

Finally, two Shinto priests arrive in a company car, each dressed in full regalia. One is the normal priest with oversight of the Nishiyama shrine, but he is also an associate priest at a larger shrine in the city; the other priest is a more senior priest at this larger shrine. They enter the shrine precincts and go to the dais where all the usual types of offerings (tai fish, vegetables and fruit etc.) have been arranged. The company president (shachō) and other senior executives leading the way, the directors file into the shrine, having their hands washed at the entrance in the usual manner by Ōishi-san and an assistant. Ueda-san and Ōkura-san are among those in the rear of the column. Ōishi-san and other minor functionaries remain in the pavilion after all the directors have gone into the shrine.

There are two Nissei employees designated to be official photographers for the event.(54) One of these is allowed inside the shrine, where he takes photographs from just behind where Nishihara-san stands, in his usual position, to conduct the proceedings. The other photographer takes photographs from the woods outside the shrine fence; from

---

(54) Both of these are men, whereas for the other rites photographs are normally taken by a female clerical worker in the personnel department. Sometimes these are published in the factory's monthly magazine distributed free to all employees, such as in the February 1984 edition which had a feature on safety in the factory and included one photograph each from the end of year 'big purification' and the New Year Safety prayers.

there the proceedings can be observed well. The anthropologist also went round to this location, near to the Nissei photographer, and was able to observe the lines of directors facing the dais and the two priests performing the purification rite over one another by waving the gohei sticks and then the senior one performing it over the assembled directors. At Nishihara-san's command of "Rei" all bow. The older priest then recites a norito prayer while all the directors stand in an attitude of reverence with bowed heads.

A junior official who had been among those left in the pavilion was then sent (possibly by Ōishi-san) to call me down from this vantage point to wait in the pavilion, so I was unable to observe the remainder of the performance.(55) However, the whole rite lasted about twenty minutes and from what little could be observed from the pavilion (mainly the backs of the lines of men) it would seem that the rite followed essentially the same pattern as those already described. Prayers were only said at the Nissei Inari shrine, not at any of the others, and after the end of the ceremony the participants were quickly taken back to the factory by an almost continuous succession of company cars.

---

(55) The other photographer came down to the pavilion shortly afterwards, and it appears as if he needed only take some photos of the directors and of the general scene rather than detailed ones of the whole ceremony. Presumably Ōishi-san considered I had taken enough photos too, and my presence was too irregular for him to tolerate too long.

The cars deposit them inside the rear gate of the factory, where tables covered with white cloths and vases of flowers have been set out in the other red and white striped, specially erected pavilion. There they sit down to drink cups of tea until 11.00a.m. By the time the anthropologist arrives(56) most have finished their tea and are waiting to go into a meeting hall;(57) a covered walkway(58) had been specially erected linking the pavilion to the entrance of the building where the meeting takes place. Shortly before 11.00a.m. a company car arrives containing the two Shinto priests, who have changed out of their formal regalia into black, traditional style male robes and raised wooden shoes(geta) because they are no longer required to perform any rites in their official capacities and are simply guests among the rest.

Various men from the General Affairs department supervise the organisation of the proceedings outside the meeting hall,

---

(56) For the other company rites I was treated very hospitably and taken to the places of worship with the participants in company cars. It is a further indication of an unwelcoming attitude to me for this rite only that when the directors had all gone and several empty cars remained, a junior official who had been waiting in the pavilion during the rite got into one of them by himself but informed me that "you have to walk!!"

(57) Though this was in the same building as that used for the Jizō Bon, it is likely that a 'better' furnished and more tastefully decorated room in the same building would have been used for this meeting.

(58) This foresight proved necessary in the heavy rain of that day.

including the personnel manager (rōmukachō), who, on seeing the anthropologist, politely but firmly says it is permissible to observe any other rite "but not this one today". The men filing into the meeting area from the pavilion can be observed from outside the factory gates, and afterwards one of the men in the personnel office, Nakahashi-san, explains the order of events in the meeting to be as follows:

(1) An opening address (kaishiki no ji): a few words of welcome.

(2) Singing of the National Anthem.

(3) Greetings from the Company President (shachō).

(4) Prizegiving ceremony to reward certain individuals in recognition of their services to the company. (In 1983 eight men received cash awards for services to the firm such as achieving very high production levels or in recognition of their long service with the firm.)

(5) Singing of the Company Song:

"The sky brightens as dawn breaks and with hope
we look out upon the world, you and I.
Our dedication shines as the vows we make
as brothers burn brightly amidst our
co-operation.
Nissei! Nissei! Light shines upon the banner of
our determination.
We are, we are, Nissei of world renown.

(5) cont'd.

The sun is reflected in the deep blue-green
waters of the river at the pure bay of Ueno,
While we as brothers from the north, south,
east and west are made as one by our
mutual determination.
Nissei! Nissei! Light shines upon us as we join
as one rejoicing in our harmony
We are, we are, Nissei of world renown.

Gathered here is our accumulated wisdom and
our technical expertise is the wonder of the
world
Till victory shouts resound we fight together,
brothers in our determination.
Nissei! Nissei! Light shines upon us as
we open the door to the future.
We are, we are, Nissei of world renown."

(Translated from the literary Japanese by Patrick McElligott)[59]

(6) Closing remarks (heishiki no ji).

The meeting finishes at about 11.35a.m. after which the directors have lunch (served from 11.40a.m. in a specially designated dining hall) and then disperse to their offices or homes.

---

(59) Besides substituting the pseudonym Nissei for the actual company name, I have also altered a geographical reference in the first line of the second verse in order to disguise the location of the factory.

Monthly Grave Rite

On the 1st of April 1973 there was a large fire in the Nissei factory. No one was killed or injured but there was considerable damage. The factory manager at that time, on the advice of Yoshioka-san, the Nissei catering manager (who is an 'amateur medium' and occasionally receives what he calls "mental flashes" from the spirit world), inaugurated monthly Buddhist rites to appease the spirits of warriors who had died in 672A.D. during a battle on the site of what is now the Nissei factory. At that time the area was a swamp, so many people had been swallowed up in the swamp without receiving a proper burial. The battle itself took place on the 22nd of July during a war of succession over the emperorship, but the 15th of each month (or 14th if that is 'inconvenient', on a holiday) was chosen as the date of a monthly rite to placate these dead spirits, because the 15th is "an easy and convenient date in the middle of the month", in Ōishi-san's words. In July, however, it is on the 22nd, when all the departmental managers (bucho) and the factory manager (Ueda-san) attend the rite, which takes a little longer than average, but in every other month Ōishi-san alone represents the whole factory staff while a Buddhist priest performs prayers and lights incense to "comfort" the souls of those who died over 1,300 years previously. The following description is of the rite as it was observed on the 15th May 1984.

At 9.00a.m. Ōishi-san leaves the factory and goes to a small flower shop in the street leading up to the main gates of the plant. There he buys two small bunches of flowers which have been prepared in readiness for him by the shopkeeper, for whom Ōishi-san is a regular customer. They talk for a few minutes together and then Ōishi-san returns to the factory, bringing with him a receipt for the 800 yen cost of the flowers to be reimbursed later by the firm. He takes the flowers to a monument looking like a tomb set up within the factory area to commemorate those killed in the battle of 672A.D.; it is fenced off in a small enclosure by itself containing also a few trees and shrubs. There Ōishi-san prepares offerings of flowers, tea and fruit, fetching the latter items from some nearby offices and kitchen. All is ready by the time a Buddhist priest from a nearby Nichiren temple (60) arrives at 10.00a.m.

The priest is given his payment of 7,000 yen (61) in an envelope which he puts in a pocket of his robes, then sits down on the seat provided by Ōishi-san in front of the monument, lights the incense sticks and begins his chanting, a rosary in his hand. Ōishi-san stands about 4 feet behind him with a rosary between his hands, which are put together in prayer. His eyes are shut but he occasionally looks around, mainly to see what the anthropologist is doing. The priest's chanting continues for 18 minutes, after which he

---

(60) Strictly, a Nichiren Shōshū temple. Neither Ōishi-san nor his predecessor knew why this temple was given this regular appointment, but there may have been some influence from Sōka Gakkai employees at Nissei, the Sōka Gakkai being a lay association of the Nichiren Shōshū sect.

(61) It is "a little more" for the longer rite on the 15th of July but Ōishi-san did not specify the exact amount.

leaves quickly in his car (parked next to the monument). He says he does not really have the time to answer the anthropologist's questions, claiming not to know much at all about the origins of these rites. Instead, he refers the anthropologist to an old man in the older part of Nishiyama who is an expert on local history and who maintains the rites at some tombstones set up not far from Nishiyama station (i.e. not in the Nissei grounds but in another industrial area) which also commemorate those killed in battle in this area. In this way the Nichiren priest avoided having to express his attitudes to the rites (which is what he had been asked), which he might have been reluctant to do in Ōishi-san's presence, and evaded the question by saying he did not know much about the history of the rites.(62)

On the 22nd of July the rite is very similar except that in the course of it each buchō in turn, lining up in the same way as is done at a funeral, takes a pinch of incense and puts it into a small charcoal brazier. He stands for a moment as if in prayer and then passes on for the next one to take his turn. The incense contains shikimi, the Buddhist 'sacred tree' (as an equivalent to the Shinto sakaki), and the whole process of burning incense is identical to that at a funeral - the same term (shōkō suru) to burn/offer incense, as to a departed soul) being used for both kinds of

---

(62) An attempt was made to interview the old man whom the priest had mentioned, but he was not at home at the time. In any case, details of the history of the rites were not the anthropologist's main focus of interest, (even if the priest assumed that that should have been the aspect of the rites of most concern to the foreign researcher).

rite. The overt purpose in both cases is to 'comfort' the deceased, but for the Nissei officials it is seen as one more version of the various safety rites held in the factory. They do stand momentarily in an attitude of prayer when burning the incense, but their prayers (if any) are along the lines of asking for safety in the factory. Whether the rites are Shinto or Buddhist, the attitude of the participants and the expressed purpose of the rites is normally that the rite is for safety at work and the avoidance of disasters. In this way no distinction is made by the participants regarding the purpose of the rites, even if the forms may differ from case to case.

Attitudes of the Participants to these rites

The membership of the participants at each of these rites varies according to the rite involved: most include the plant manager, Ueda-san, many include the departmental managers, buchōs, and General Affairs section managers, some include union representatives and some include people like the sports clubs' representatives, jichikai representatives or Yoshioka-san who are involved in that particular rite only. The membership changes, but the alleged purpose of these rites is the same - namely, 'safety' in some form or other. All of them involve prayers for safety, whether against fires (the Hatsu-Fudō and monthly grave rites), accidents in the martial arts or boat teams (the opening of the sports hall rites), or general safety at work (New Year Safety prayers). Some also include, in addition to safety, prayers for prosperity (the anniversary of the founding of the company, the Hatsu-uma sai and, according to the speech by Nishihara-san, the New Year Safety prayers). Most of the rites are Shinto, but the monthly grave rites and the Hatsu-Fudō pilgrimage

are Buddhist. Despite all this variation in participants and styles of rites, all informants are agreed that the overt purpose of all the rites is to pray for safety, some also mentioning prosperity, and even though the attitudes of participants differ among themselves each expresses one basic opinion about all these rites regardless of how many he or she participates in. Some do give several comments, but these are all on related aspects of the same basic theme and do not distinguish the attitudes towards one rite from those towards another. Nishihara-san, for example, says that (i) "it is important to preserve old traditions", (ii) "it is not scientific but spiritual" and (iii) he has not thought about whether it has any effect and adopts an agnostic attitude to the whole question. His superior in the firm, the plant manager, Ueda-san, has a definitely sceptical and unbelieving attitude, however, saying he has no faith in the rites at all ("hontō ni wa shinkō shite imasen") but he does it simply as part of his work (kaisha no shigoto), because all his seniors (senpai) did it. He says his public position is that he believes in it, but in his heart (kokoro) he has no faith in the rites at all. He also thinks that the company president in Tokyo probably has no personal faith in the ceremonies either, because he and his wife are known to be Christians of some kind, but Ueda-san does not know to which denomination they belong. The third principal participant in these rites, the General Affairs Manager, Ōkura-san, also says

that he thinks the rites have no effect but he does it because it is part of his work and he has no strong objections to it. He says that if he objected to it he would have to say what the meaning of the rite is, but "as there is no custom of specifying exactly what the meaning is, I participate because as General Affairs Manager it is part of my job". Similarly, he does not believe that the ōharai shiki at the end of the year can take away his sins and pollutions because he did not know about the existence of this rite before he came to Ueno so had not been brought up to have any faith in it. His overall attitude to these religious rites at the factory is that there are too many of them, they take up too much time, and some of them ought to be dropped.

However, his kachō for the personnel section holds the opinion that if any of the rites were to be neglected "something bad might happen to the fortunes of the company", so he thinks it is "safer" to continue the rites. He, like those above him, has to participate because of his work but he is more prepared to say that the kami does protect the company in some way from disasters. The man under him in the personnel department responsible for the shataku administration, and who participates in the rite for the opening of the sports hall, also says the kami protect (kamisama ga mamotte iru), that he has a 'holy feeling' when he participates and that the rite serves "to unify the spirits (of the participants)" (seishin o tōitsu suru). At about the same level in the General Affairs department is Ōishi-san, whose attitude to the rites when first asked

is that they do have some kind of effect, that pollution is taken away by the nunosaki at the ōharai-shiki and so on, a reply which one could expect from a man with his job, but when pressed about specific ways in which he thinks the safety prayers have an effect he says that there is "no direct visible effect, just a spiritual one."

The overall impression from these attitudes is that those at the top of the company, who have to take part as official representatives of the firm in more rites than any others, are also the ones who are most willing to deny any personal faith in the efficacy of the rites, whereas those further down the firm's hierarchy are more likely to profess some such faith even when asked in private without any others overhearing their answers. Perhaps even in private they feel reluctant to express doubt about the official company ideology, whereas those nearer the top have less to lose if they voice their doubts to an outsider - although such doubts are not voiced in public. Even the union leader adopted the official 'company line' when he gave the opinion that the rites do have some effect "otherwise the company would not perform them", but his replies were communicated through a third party because "unexpected business" meant that he was unavailable for interview at the time originally arranged. Seventeen other people were interviewed in person about their attitudes to the rites, however, fifteen of whom participate in them and two of whom assist with tasks such as pouring water over the hands

of the participants as they enter the shrine. Both of these helpers are low in the company hierarchy and both say they think the kami does protect, one of them saying he "believes 70%." The other 15 participants include those whose views have already been mentioned plus the production and film buchōs, the general manager of 'Nissei Products' and his business manager, the chief accountant of the Osaka office,(63) Yoshioka-san, the boat team coach and the judo team leader. Correlating their overall attitudes (to produce 18 replies(64)) with the position of these men in the company, the following patterning emerges:

TABLE 12.3

ATTITUDES TO COMPANY RITES

	POSITION IN COMPANY		
	High	Middle	Low
"Rites have no effect"	5	1	
"Spiritual but not technological effect"	2		
"Effect only on one's feelings"	2	2	
"God does protect and the rite has some effect"		4	2

There is therefore a strong indication that those most sceptical about the efficacy of the rites are, ironically, the very people whose jobs require them to participate most

(63) He was interviewed while waiting for the company anniversary rite to begin on 16th April but because he wanted to practise his English his comments were not understood by the few people nearby such as a security guard and others not fluent in English.

(64) The attitude of the union leader is also included, but the qualification mentioned above needs to be borne in mind regarding its validity.

often in the rites and who have participated in them for at least several years. They are the high ranking company officials of buchō status or higher, whereas those lower in the hierarchy such as the personnel kachō, the union leader, the Sakurano jichikai head or the judo and boat team coaches have a more limited range of rites in which they participate or have not been obliged to take part over so many years. These are the middle ranking officials who are more likely to claim some kind of a 'belief' that the kami protects or at least to say (like the personnel section manager or the judo team leader) that if they ceased performing some rites they would risk incurring the wrath of the gods, so it is "safer" to continue the rites. The two low level helpers who did not actually 'participate' but were involved in preparing the shrine precincts or pouring water also expressed a high level of 'belief' in the rites. It seems that 'belief' is inversely correlated with one's position in the company.

Two possible explanations for this finding are (i) that the top management have less to risk by expressing scepticism than those lower down the hierarchy, especially if people like Ueda-san know that the company president is supposed to be a Christian and therefore does not believe in the rites either, and (ii) that their longer experience of the rites and not perceiving any tangible result from them has in itself encouraged private scepticism even while their public actions are those of an apparent believer. Southwold (1983:48) has recently emphasised a comment by Evans-Pritchard that to act as if one believes conduces to belief, with the

proviso (ibid., p.53, footnote 4) that one 'entertains' the notion to be believed, or has it in mind. It would appear that this has taken place among the younger members of Nissei, but as they reach more senior positions in the firm a reverse process takes place: they still act as if they believed but they no longer 'entertain' the notion to be believed, it seems, even though they are reminded of the purpose of the rite each time by the announcement of Nishihara-san and by the circular information sheet distributed by Ōishi-san (if they bother to read it any more). One begins acting as if one believed and becoming, it seems, some kind of a 'believer', but one can end up still acting as if one believed but no longer a 'believer'.

'Safety' in company rites

It is clear that all these rites relate to prayers for safety, and that for at least two people the motivation to continue them comes from a fear lest the company's fortunes will decline or the judo team have serious injuries if the rites were to be neglected. They see the importance of continuing the rites as 'being on the safe side'. Two of the rites, the Hatsu-Fudō and the monthly grave rites (both Buddhist rites) originated in response to specific disasters (fires) in the factory. All the Shinto rites involve some element of prayers for safety, often the major purpose of the rite(such as at the New Year Safety Prayers), but all of these have continued since the foundation of the company rather than being responses to specific disasters.

It should also be emphasised in the present context that all the company cars have mamori charms which are renewed each year at company expense, all the buildings using fire in some form have fuda bought each year by the firm during the Hatsu-Fudō pilgrimage, and other offices have fuda for the general protection of the building (bought from a shrine in Kyoto specialising in the 'protection of buildings'). At least one office (a general office located to the rear of the 'porter's ofice' at one of the factory gates) contains a Kamidana dedicated to the god of fire (Hi no kamisama) at which the porters and those in that office bow twice a month (on the 1st and 15th), change the water and put new sakaki leaves. They say it has been installed since 1967, when there was a fire in that building. It was not ascertained how many other offices in the Nissei factory also have Kamidanas, but it is unlikely that this one is an isolated example.(65)

Instead of installing a Kamidana, a different course was adopted by the manager of the film department when his department began to have a serious accident rate. He decided that he and his section managers should go to the Sakurano shrine on the first workday of each month before work to pray for safety in their department. Still the accident rate continued to be high, however, and the

---

(65) It was noticed by the anthropologist when he happened to go to that office, but there are many offices he never visited. This one example makes him suspect there could be many more.

inconsistency between their prayers and experience was obvious one day when they returned from their prayers for safety to find that one of their men had accidentally cut off his finger on a machine . Two years later this film buchō expressed the opinion to the anthropologist that the prayers have "no technical effect"(66), an attitude perhaps influenced by this experience.

Another rite which was not observed by the anthropologist but which takes place when a new building is erected or a large piece of new machinery is installed at the factory is a jichinsai As described to the anthropologist by one participant, it is similar to rites like the opening of the sports hall in that an alter (saidan)is set up on which sake, vegetables and other items are offered. The representatives of the department concerned also offer sakaki in the same way as for the other rites. The informant is the boat team coach, Mr. Mita, who lives in one of the 'A' type (smaller) shataku apartments and is the man in Table 12.3 of 'medium' rank who thinks the rites have no effect, although he calls them "kejime" ('rites to make a distinction' - i.e. 'rites of passage'). He says that he has to participate reluctantly, even against his will, because it is a company ceremony and he feels obliged to take part ("kaisha no gyōji desu kara shikata nashi ni sanka shite imasu"). About 20 to 30 people attend the ceremony, almost all those in the

---

(66) He at first said that it does have some efficacy or is "half efficacious" to promote safety, health and freedom from fires, but then went on to say that the effect is "mental, not technical", and affects one's feelings (kimochi) rather than having any "technical" effect.

department, because even if they are not 'ordered' to take part those higher up in the firm invite them to take part if they have nothing else to do. Since few have specific tasks - which need to be done at that time without delay, virtually all do attend the ceremony: certainly this was his experience at the jichinsai for the installation of a composite moulding plant (a large piece of machinery) in his department in 1983. He does not think an accident would take place if they did not participate or pray, but he ended up praying anyway because it was expected of him. As for the opening of the sports hall rite, he prays for safety for all those involved (67) but he says he does not think about any god (kamisama) at the time and sees the rite as quite separate from 'religion' (shūkyō). In terms of the proviso mentioned by Southwold (1983:53, footnote 4), he does not 'entertain' the notion to be believed, but he does participate as if he believed. Still he is quite sure that the prayers have no effect (kōka or kikime) and says that his participation comes from no personal belief in the necessity or efficacy of the rites but from a sense of duty to the firm. The same attitude was expressed by others higher up in the company, such as the production manager (seizō buchō) who says he takes part only out of a sense of obligation (giri) to the company.

---

(67) For the sports hall rite he also prays for good results in the boat team's races (ii seiseki).

Duty and Compulsion in Company Rites

The above quoted comments by the boat team coach and the production manager show that among those with no professed belief in the efficacy of the rites participation is a result of obligation or duty, and this applies as much to the plant manager and the other top officials at the factory as to those lower down the hierarchy.(68) All are 'caught' in a 'web' of obligation and duty which brings about participation irrespective of personal attitudes or beliefs about these rites. The perception of this sense of obligation increases as one rises in the firm's hierarchy, partly because the rites known about by those lower down are those like the Christmas party or Jizō Bon in which participation is more of a voluntary nature, whereas those higher up in the firm feel more obligation to take part in the more specifically 'religious' rites entailed by their position in the hierarchy. Taking the replies of all those who gave an opinion in the questionnaire about whether or not all employees must participate in the rites, one finds that almost all respondents reply 'no', only one replies 'yes', three write that 'only those concerned in the rites participate' and one writes in more detail that there is "no strong pressure, but if one goes in to work that day all the company members participate". It is noticeable, however, that four of those who do participate in at least some of the rites at the

---

(68) Ueda-san's comments have been quoted earlier, regarding his 'public' versus 'private' attitudes to the rites.

Sakurano shrine conspicuously left this question blank even though two of them had listed already rites such as the Hatsu-uma sai and the New Year Safety Prayers in which they participate. This observation links in with the verbally communicated comments of men like Ueda-san, Ōkura-san, the production buchō and the boat team coach that they feel an obligation to participate on account of their membership in the firm, and in practice they therefore have to take part even if in theory there might be some choice in the matter. For those at the top of the factory hierarchy there is an example to be set, but even they are still conscious of the possible effect upon their careers if they did not participate in the firm's anniversary rites when the top management come from Tokyo. The same holds true of those further down who do not want to jeopardise their careers by refusing to participate, especially if they are not members of the Sōka Gakkai or of a Christian church so have no ideological basis for refusal. It seems, however, that even among some of those with such a membership, including, apparently, the company president himself in Tokyo, participation in the rites may be viewed as a 'safer' course than risking one's reputation, career chances or whatever by refusing to take part. This applies particularly to those further down the hierarchy who do not want to risk their promotion chances by objecting to the rites, but once one has begun to participate without protest it is more difficult to refuse to take part some years later if one reaches the higher rungs of the company ladder.

The theme of 'memory'

Although the theme of 'safety' appears to be the dominant motivation for most factory religious rites, the theme of 'memory' is mixed in with that of 'safety' in one particular type of memorial rite performed twice a year by the top management of the firm (normally Ueda-san, Ōkura-san and Nishihara-san). Whereas the Buddhist rites for Hatsu-Fudō and the monthly grave rites seem to be motivated largely by 'safety', the grave rite to be described now involves a commingling of the two themes of 'safety' and'memory'.

The visit to Mr. Minelli's grave

When the Nissei plant in Nishiyama was first set up in 1926-7, British,German and Italian technical advisors (69) were accommodated in the older shataku and helped to install the specialist machinery. One of them was Antonio Minelli, an Italian chief engineer who committed suicide on the 17th of February 1927 in the factory itself. The reasons for the suicide are not fully known; Nissei officials such as Ōkura-san and Ōishi-san just say he was mentally disturbed or deranged.

Minelli left behind a wife in Italy but no children,(70) so Nissei took on the responsibility for visiting his grave at Bon and on the annual anniversary of his death. Nissei officials also visit the grave of the founder of this

---

(69) The British group were seconded from Courtaulds, and the German and Italian specialists from other firms.

(70) He was born on the 12th of August 1882, so was aged 44 when he died.

Nissei plant, who died in 1959, at Bon and at his annual death day in September, but his family members are also present on these occasions whereas no-one else visits Minelli's grave apart from the Nissei Officials. Now only a few retired former Nissei employees still remember Minelli but those who go to visit his grave are the plant manager, (Ueda-san), the General Affairs buchō (Ōkura-san) and the Business Affairs manager (Nishihara-san), the same three who go on the New Year shrine visits together. None of them knew Minelli in person, but they do the grave rites as part of their jobs.

The reason given for Nissei taking on the responsibility for these rites is that there was nobody else who could do so. This is a valid reason for assuming responsibility for ancestral rites in Japanese eyes, as evidenced by a similar attitude reported by Smith (1974:206) regarding a man who found an ihai lying on the beach and felt he should take responsibility for the worship of that unknown person. However, the very fact that Minelli committed suicide in the factory itself and has no surviving dependents to perform ancestral rites would also put him in the category of muenbotoke ('wandering spirits') who might be vindictive if not properly appeased, in spite of the fact that Minelli was a foreigner and known by Nissei officials to be officially a Roman Catholic. Whether the idea of muenbokoke had any influence upon the decision to look after his grave or not, or whether it was simply because nobody else was available to do so, the fact remains that twice each year Nissei

officials go to visit his grave on the dates prescribed by Japanese custom.

The one who has the task of actually cleaning up the grave, however, is Ōishi-san, who went on the 16th of February to weed the site and tidy it up in preparation for the higher Nissei officials who go the following day. At 9.00 a.m. on the 17th they leave the factory in a company car for the one hour's drive into Kyoto, where Minelli was buried in a public grave yard(71). In 1984, however, the factory manager was unable to go because he had "other urgent business" and so had Nishihara-san, who sent along instead his deputy, Mr. Nakahashi (72). Nakahashi-san is responsible for arranging some of the 'non-religious' ceremonies at the company, such as the entrance of new recruits or the awarding of prizes to some 'outstanding' Nissei men at the anniversary of the foundation of the firm.(73) His involvement in the more 'religious' side is limited to occasions such as these when he may have to deputise for Nishihara-san. Therefore on this day the only

---

(71) The reasons for choosing this graveyard are not known, though it belongs to the Kyoto municipal authorities and not to any temple, so a number of foreigners have been buried there.

(72) This again illustrates the priority given to business before religion. Nakahashi-san is intermediate in status between Nishihara-san and Ōishi-san.

(73) These 'non-religious' ceremonies have been described and analysed for another Japanese firm by Rohlen (1974:34-61), but a description of those at Nissei lies outside the scope of the present work.

senior manager of Nissei to participate in the rite is Ōkura-san.

Once they arrive at the graveyard, the driver remains with the car but produces unbrellas from the boot for the others, who have to walk up a pathway to reach the graveyard. There Nakahashi-san fills a bucket provided by the graveyard authorities with water and carries it to Minelli's grave, Ōkura-san carrying the flowers they had brought with them from the factory. Once they reach the grave itself, however, it is Nakahashi-san's task to put the flowers in the two vase stands already in front of the grave and to light incense sticks while Ōkura-san wipes off the freshly fallen snow with his hand to show the writing on it, after which he takes the ladle and bucket of water and pours water over the gravestone to wash it ceremonially. He then stands in front of the grave facing it and bows briefly for no more than two or three seconds, with his hands together. Nakahashi-san then does the same, a brief bow with hands together. The two then return to the car and waiting driver, returning the bucket and ladle on the way; before they leave the graveyard Nakahashi-san gives a gift of 1,000 yen to the custodian of the graveyard, the usual Nissei contribution on both occasions when they visit this grave during the year. The driver then takes them back the one hour's journey to the Nishiyama factory where they resume their normal work.

During the
Hatsu-uma sai
each representative
receives a branch
of sakaki from the
Shinto priest which
is then offered to
the kami.

Making preparations for the rite performed at Minelli's grave.

Attitudes to the grave visit

Ōkura-san's attitudes to the other rites have already been mentioned, in that he sees the safety rites etc. as having no efficacy and being a waste of time because there are too many such religious duties at this factory. A whole morning of his time was taken up by this trip to Kyoto and back, while neither Ueda-san nor Nishihara-san were able to attend owing to other work. His attitude or feelings when he goes to the graves of Minelli and of the founder of the Ueno plant(74) are the same: to give thanks for the establishment of the factory. As he knew personally neither of the two men whose graves he visits, he feels no personal connection with either of them, so these grave rites evoke in him no personal memories. In his brief moment of bowing before the grave the thoughts in his mind are of gratitude for what these men had done to establish the factory and company of which he is now a director.

Nakahashi-san's attitude is similar, but he couches his reply much more in terms of memory. He says his feelings or thoughts as he bows in front of the grave are those of recollecting or thinking about what he knows of the history of his company and the role of Minelli in it, and the grave visit reminds him of those days and causes him to reminisce (using the words shinobu and shinobaseru,

---

(74) The same people go to both graves (if they are available and have the time): Ueda-san, Ōkura-san and Nishihara-san.

'to think of, remember' and 'to remind one (of), make one reminiscent (of)'). He says the grave rite is a duty (gimu) for the firm and he has no other feelings about it. One very interesting word which he uses, however, is daisenpai, 'big/great senpai' referring to Minelli. The Italian is one of the founders of the factory, and is an 'older colleague' (senpai) among Nakahashi-san's own senpai, a 'great senpai, who is, as it were, an 'ancestor' of the present generation of Nissei employees, including Nakahashi-san himself.

This comment about Minelli being an daisenpai indicates the way in which the theme of 'age', in terms of an age hierarchy in the company, fuses with that of 'memory'. The daisenpai has no genealogical relationship to those who go to perform the grave rites for him, he is not 'worshipped' and, as far as Ōkura-san is concerned in any case, there is no professed belief in any afterlife. (75) Those who perform the grave rites can only preserve the memory of the daisenpai; on behalf of the firm they maintain the grave rites and act in the same kind of way (washing the grave, lighting incense sticks and bowing to the grave) as is normally done for ancestral rites. However, the senpai or daisenpai, in terms of the 'generations' of workers in the Nissei family, becomes the object of these rituals because he has no one else to preserve his memory.

---

(75) Nakahashi-san's views on the nature of an afterlife were not ascertained.

If Minelli was originally regarded as a kind of muenbotoke, unattached spirit, his soul would have been 'out of place' and therefore 'dangerous'. In order to avert the danger, memorial rites are held for him by the firm.(76) As a 'dangerous' spirit with no fixed location, he is in a similar category to those warriors who died in the area centuries ago and who are appeased at the monthly grave rite. Another very similar rite on behalf of the unattached spirits is the segaki rite on the 24th of August each year.

The Segaki Rite

In many parts of traditional Japan the 'unattached' spirits were given food offerings at a special altar around the time of Bon (cf. Smith 1974:19-20, 42-3, 64). This segaki ritual was reported by only one of those interviewed about household ancestral rites (a woman from a rural background), and it seems to have almost disappeared from many parts of urban Japan. However, the Nissei factory has reasons for preserving this rite on account of the many spirits of those who died in battle in the area centuries ago and who might become vindictive if unappeased. Therefore the segaki rite is continued each year, but Ōishi-san does not know when it was initiated. He does not think it was on account of a fire at the factory or any similar disaster, and he does not know the sect of the Buddhist priest from across the river who comes to perform the rite. As for the regular monthly grave rites, Ōishi-san is the only person apart from the Buddhist priest to be present at this rite,acting as

---

(76) It was not ascertained whether Buddhist hōji had also been held for him, although there were no tōba plaques indicating this at his grave (if any such tōba had been made for such a hōji anyway

a representative of Nissei as a whole. The both go to the summit of Sakurano hill, where on the corner of the flat area in front of the company's Inari shrine, near to where the pavilion is set up for the firm's anniversary rites in April, a small altar is set up. On it are arranged grapes, peaches, sake (rice wine), mochi (rice cakes), apples, flowers, candles and incense. The Buddhist priest chants for about half an hour in front of this with Ōishi-san standing near him like he does for the other priest who performs the monthly grave rites. At the end of the rite they take the offerings and distribute them over the ground in the area around the edges of the company shrine, leaving the food there for the wild animals to eat. The animals (birds, dogs, cats, or tanuki, a kind of raccoon or badger) are said to be the present day guardians of the graves of the ancient warriors, but it almost seems as if they are considered to be embodiments of the dead spirits in some sense, in so far as the traditional segaki rite of feeding the hungry spirits has become transformed into a rite of feeding the local animals while praying for the dead spirits in that area.

Purity and Pollution aspects in the company rite

The monthly grave rites, the segaki rite and the visits to Minelli's grave all embody a concern for the 'unattached' or 'wandering' spirits who are 'out of place' with no one else to care for them. Even after many centuries, or 57 years

in Minelli's case, they are still in some way to be placated or to have rites performed for them, whereas in the normal course of events such people would no longer have rites performed specifically on their behalf.(77)

It is because they are 'out of place' that they are 'dangerous' in some way, and in this sense purity and pollution concepts of everything or everyone having a 'proper place' merge with 'safety' concepts whereby to be 'out of place' involves 'danger'.

Purity and pollution concepts also permeate the Shinto rites in a more obvious manner. The end of year 'big purification' involves such themes in a specific way, through the idea that the nunosaki somehow takes away the sins and pollutions of the past year of those who breathe onto it. Such is the overt meaning of the rite, even if men like Ōkura-san say they do not believe in such a doctrine. In all the other Shinto rites there are purification elements, however, all of them commencing with the priest performing a 'purification' (o-harai) over the offerings and the people - and, in the case of the Nissei anniversary rites, the priests also do it over each other. According to Ōishi-san, the peeling of a satsuma orange (mikan-maki) part of the Hatsu-uma sai and the o-hitaki originally had the same symbolism as the 'big purification rite', whereby each participant blew onto the orange peel and threw it into the fire as a symbolic removal of sin or pollution, though such ideas are no longer expressed and the bonfire now is simply to keep the participants warm.

---

(77) Usually after 50 years, or 33 years in some sects of Buddhism, a deceased person ceases to have specific rites directed to him or her because that person has become merged with the collectivity of ancestors.

In a more general sense, the fact that the Shinto rites are concentrated at the beginning or end of the year (by the old or new calendars) is also a reflection of purity and pollution concepts which require markers between boundaries. As such, the rites provide 'distinctions' (kejime) between periods of demarcated activity, each one marking the beginning or end of one kind of ritual or business activity by the old or new calendars.

Yoshioka-san

A key figure behind the scenes in the religious aspects of Nissei factory life is the 'catering manager', Yoshioka-san. Technically he is the managing director of his own catering business which runs all the Nissei canteens. Recently he also set up a factory in Thailand for rearing prawns and other sea foods for commercial markets, and in the future might import some of these for Japanese markets. His principal influence in Nissei, however, comes through his being an'amateur medium'.

He describes his revelations from the spirit world as "mental flashes", which can take the form of premonitions or revelations.(78) His own accounts of some of these are as follows:

One of Yoshioka-san's colleagues at Nissei had a stomach problem and went to Yoshioka-san for advice. Yoshioka-san told him to go to pray to a particular Buddhist idol near to the Nishiyama high school. The man later recovered so Yoshioka-san presumes that his advice was acted upon.

---

(78) He thinks this runs in the family because he claims that his father and grandfather also had premonitions and that his second son can bend steel like Uri Geller.

On the morning of the day Yoshioka-san was interviewed about these matters, Ōishi-san had found that a tree in the Sakurano park had been blown over and was tilted at an angle. Not knowing what to do about it, he asked Yoshioka-san to find out from the spirits whether it would be better to cut down the tree or straighten it, as Ōishi-san did not want to risk the wrath of the local kami if he were to take the wrong course of action.

The Nissei factory in Ishikawa prefecture has only 200 employees because it is largely mechanised but these men clubbed together to buy a Shinto 'idol' (yashiro) for the factory. Although Kenkyusha's dictionary calls a yashiro 'a (Shinto) shrine', the detailed descriptions given by Blacker (1975:38-40) of yorishiro (an alternative name for yashiro) and by Yoshioka-san make it clear that the yashiro is the dwelling place of the deity, and usually takes the form of a stone or wooden object in which the kami resides.(79) Yoshioka-san says that after the wooden image is made by a specialist in Kyoto there is a ceremony for the god to enter into the yashiro. This makes it, in effect, into an idol.(80)

---

(79) O'Neill (1973:52) gives the derivation of the character for yashiro as 'the god of the earth' - therefore, by extension, his shrine, but the character normally has the meaning of 'association'. It is not only found in words like jinja, the normal word for a Shinto shrine, but also in words like kaisha, a company or firm, and shakai, society.

(80) As in Chapter 11, the word 'idol' is here used for an image for which such a ceremony has been performed, one in which a deity is thought to reside.

The manager of the Ishikawa factory came to consult with Yoshioka-san about the proposed installation of this yashiro (in its own small shrine precincts) and to ask his opinion about the best kind of yashiro, where to find a craftsman to make it and other such details. In accordance with Yoshioka-san's advice the yashiro had been bought and was installed at the Ishikawa factory in June 1984.

The manager of a Nissei factory in Ibaraki prefecture also came to consult Yoshioka-san because he had been involved in a series of traffic accidents. They prayed together at Yoshioka-san's family shrine on the 6th and 16th of that month,(81) after which the manager returned to Ibaraki prefecture. Yoshioka-san claims that the man ceased to be involved in any traffic accidents after that. He did not specify how long ago this incident took place, but some time after that, in 1982, the manager of that factory came again to Ueno and took a yashiro back with him for the factory in Ibaraki.

In such ways Yoshioka-san's influence as an 'amateur medium' influences and affects the religious practices not only of this factory but of others within the Nissei group. His influence is certainly responsible for the extension of some religious rites and the setting up of idols (yashiro) where otherwise no religious cult might have been initiated.

---

(81) These are the go-meinichi of the two gods in that shrine, the special days in the month when they are supposed to be worshipped. Yoshioka-san prays there on these two days each month, accompanied by the rest of his family if these happen to fall on a Sunday or holiday.

Nissei rites in perspective

The influence of Yoshioka-san probably makes Nissei unusual in the extent to which religious rites are performed at this factory. Ōkura-san, the General Affairs manager, says that there are more rites here than at other Nissei factories; to some extent this is due to the fact that the area had formerly been a battle ground, but equally important is the interpretation placed upon events such as the fire in 1973 by men such as Yoshioka-san and his attribution of the fire to the neglect of the spirits of those who had died in the area over 1,300 years previously. Owing to the scarcity of studies on religious events in Japanese factories elsewhere, it is difficult to compare Nissei with other firms in order to test how 'representative' Nissei might be. The brief mentions of such rites by Rohlen(1974:41) and Abegglen (1973:140) indicate that religious rites are held by other firms but neither Rohlen nor Abegglen describe any such rites in depth. According to Sue Behague(personal communication) there are religious rites for all the management held regularly every month at the steel works in Toyama where she taught English to the employees, all of these rites also being for 'safety' and 'prosperity'. It might be that the frequency of religious rites is greater in those industries in which the perception of danger at work is also greater, or else prayers for prosperity are felt to be needed more in an industry which is not growing but facing some decline (unlike Nissei's expansion into fields such as the manufacture of video tapes).

Such correlations would need to be verified by further empirical research.

A certain amount of comparative data comes from the replies of Aoyama residents who listed on their questionnaires what kinds of religious rites they took part in at work. The responses of those who definitely do not work for Nissei are as follows:

Railways section manager:	'Prayers for safety: prayers that there should be no fatal accidents as there are many such accidents in the electrical and associated industries.'
Lecturer at Kyoto Technical University:	'*O-hitaki* rite'
Individual Business:	'Visiting the graves of one's predecessors'
Kachō of a pharmaceutical firm:	'Twice a year at Higan (Spring and Autumn) we pray for the spirits of those animals used in vivisection at work, giving thanks for the spirits of the many animals used for such research purposes.'
Non-Nissei 'company employees':	'Prayers for safety' (1 case)
	O-hitaki sai (3 casses)
	Hatsu-uma sai (1 case)
	Jichinsai (5 cases)
	Big Purification rite (1 case)
	New Year shrine visit (3 cases)

There were also responses from others who did not specify which firm they work for and simply classified themselves as 'company employee' (*kaishain*) or 'salaryman'. Since most of these voted for the D.S.P., there is a high chance that they work for Nissei.

Their replies were:

Inari festival	(3 cases)
Jichinsai	(3 cases)
New Year festival	(1 case)

One other man who definitely does work for Nissei, but not at the Nishiyama factory, also wrote about Shinto prayers for the safety of workers and commencement ceremonies for new plant or equipment. He wrote that there is no rule that one has to participate but one feels embarrassed if one does not join in. Among the other respondents to this question in Aoyama, the distribution of replies concerning the degree of freedom to participate is as follows:

'Free':	7 cases
'Only those it concerns':	4 cases
'Top managers only':	1 case
'Only those who wish to':	1 case
'Not forced to but...':	1 case
'As many people as possible are expected to participate':	2 cases
"All participate':	1 case
'It's a company regulation':	1 case
No response:	5 cases.

When asked about the purpose or meaning of the rites, the following replies were obtained:

		Number of respondents
(1)	To enhance awareness of safety; prayer for safety; prayer that there should not be fatal accidents at work etc.:	7
(2)	To pray for prosperity and safety:	2
(3)	To pray for prosperity of company:	2
(4)	To allay one's anxiety (kiyasume); for peace of mind; to brace the morale of the workers:	3
(5)	Custom or tradition; don't think there's any purpose or meaning attached:	3
(6)	To give thanks for the spirits of the animals:	1
(7)	To give thanks for the hard toil of one's predecessors:	1
(8)	It (the Hatsu-uma sai) is like an engi ('omen' - but probably meaning 'superstition' as in the expression engi o katsugu 'to be superstitious'):	1
(9)	Blank; no response:	4

The variety of replies and attitudes revealed by these respondents suggests that religious rites at companies are probably very common. The form and content may differ from case to case but very often they concern 'safety' and to some extent 'prosperity' or aspects of 'memory' (the rites for animals killed in vivisection or for the past members of a firm). In addition, the presence of mamori charms or fuda in virtually all buses and taxis and in many trains also attest to what is probably company policy elsewhere, as in Nissei, to purchase such charms at company expense. This is also the practice for all cars owned by the N.H.K. (the Japanese equivalent of the B.B.C), according to the N.H.K. chief announcer for Ueno. He also told the anthropologist that every new car (having a life of only 2 to 3 years, owing to depreciation) bought by the N.H.K. in Ueno also

receives a special 'purification' (o-harai) performed by the Shinto priests of the Ueno jingū before it is used by the company in the normal course of business. Such religious elements are found in national institutions such as the N.H.K., in large firms such as Nissei, and probably in most small firms too. Those in small, family businesses have a reputation for being 'religious', according to informants in Ueno, and their less stable economic circumstances (as compared to large business concerns like Nissei) make this 'emic' idea highly plausible. Certainly the Aoyama shopkeeper and his wife visit a shrine every month to pray, for continuing prosperity among other things, and also pray daily at both their Kamidana and Butsudan; such religious responses to economic insecurity may be common among many of the self-employed and lower middle class people of Japan who may therefore appear to be 'more religious' but are responsing to the same 'motivation' of 'safety and security' as are many others in other contexts. In large firms such as Nissei the religious elements are much less obvious because far fewer people are even aware of them. Even the wealthiest man in Aoyama, who runs a family business manufacturing gold and silver thread for the kimono industry, says he is anxious about economic and financial matters as he looks to the future, so at New Year he puts a contribution of 10,000 yen into the offering box at the Shinto shrine in the village outside Ueno

where his firm is based, praying at the same time for prosperity for the business. He is to some extent influenced by the common idea that the kami pay more attention to the prayers of those who put most into the offering box, but he is also concerned about the security of his company in the future. In response to perceived insecurity, he prays and asks for the blessing of the kami upon his firm.

Conclusions

The presence of religious rites in Japanese companies is relatively little known, even by many of the employees working for such firms. However, their managers perform such rites, acting as representatives on behalf of all those in the firm. Even many of the top management, however, are dubious or sceptical about whether the rites have any 'efficacy' but they continue to participate because it is expected of them by their position in the firm's hierarchy. In passing, it may be noted that it seems difficult to sustain a Durkheimian view of religion in circumstances in which few people even know about the rites and several of those who do, and who take part in them, are doubtful or sceptical about the overt purpose of the rites: there is no obvious covert purpose (in terms of general company unity etc.) if most of those on whose behalf the rites are performed know nothing at all about even the existence of these rites.(82)

The principal point as far as the present theoretical model is concerned, however, is that in all this variety of religious phenomena the basic strands of 'safety', 'memory' and 'purity and pollution' can be discerned as underlying 'motivations' for the rites. The theme of 'age' hardly enters in at all except as a subsidiary to that of 'memory',

(82) This point will be discussed further in chapter 14.

when Minelli is referred to as a daisenpai. Among all the rites, the most common theme is that of 'safety', which permeates almost all the rites, whether Shinto or Buddhist. The theme of 'purity and pollution' is most explicit in the Shinto rites (with purification ceremonies etc.) but is also implicit in the Buddhist rites for departed spirits who are 'out of place' (with no one else to pray for them or who have not had a proper burial) and are therefore 'dangerous' - even after 1,300 years. Traces of the theme of 'memory' can be detected in the rites on behalf of Minelli, but these are slight. What evidence there is (and it is fragmentary) from other companies also suggests that these themes and especially that of safety, are found elsewhere too. Even if the Nissei pattern is a little unusual because of the influence of an 'amateur medium' in promoting Shinto and Buddhist rites at both company and individual levels, the underlying 'motivations' for such rites, in particular that of safety (of which the security from 'prosperity' is a sub-set) are found in a wide variety of other Japanese businesses. There may be correlations between the types and varieties of company rites and the size of firms, economic prospects and perceived danger involved in their work, but such correlations will need to be verified by further empirical, comparative research.

CHAPTER 13

PERSONAL PROFILES

In Part II four basic themes or 'motivations' in Japanese religion were isolated; in Part III some of the principal events or factors which activated or channel these 'motivations' into specific paths at particular times were discussed, and already in chapter 12 the working out of these themes at the level of company rites has been shown through a case study of the Nissei Nishiyama plant. It remains now to focus upon individuals and to see how these themes are manifested in different people's lives to produce a kaleidoscope of different patterns at the 'surface' level of description. Each individual is different, and some display a wider range of religious behaviour than others. It is, therefore, an extremely difficult task to select a 'representative' sample, because the criteria for choosing such a sample are very hard to define. Each person interviewed stands out for at least one distinctive feature about him or her in the mind of the anthropologist; every interview revealed something new or of interest even if many of the replies and attitudes are similar to those of others. A particular experience, an unusual belief, an interesting comment about some aspect of Japanese religion, a rare practice, a humorous anecdote about a religious experience,

membership of a particular group, relationships within the family and different members' attitudes to religious phenomena: all these and many other aspects of life make each informant in some way unique. No single individual is 'representative' of the whole, and no small group of individuals can do justice to the wide range of experiences actually encountered. Some kind of selection is necessary, however, and the criteria adopted are those of sex, age and 'religiosity'. Four men and four women have been selected: of these, one man and one woman (both married and in their thirties) are taken as representative of relatively 'non-religious' people who perform a few rites now and again as 'custom' or for other reasons. The other three individuals of each sex are chosen to indicate the attitudes of one older person, one younger married person and one unmarried person. Each is to some extent indicative of a particular 'type' but the variation among each of these 'types' is so great that the individuals chosen can not be said to be fully 'representativ in every detail. They are, however, indicative of general attitudes within each type and to that extent may represent the whole.

(1) A relatively 'non-religious' man

Mr. Hattori is aged 36 and lives with his wife and two children (a boy aged 5 and a girl aged 1) in one of the larger, 'B' type shataku apartments. Educated up to M.Sc.

level at university, he is now in the research and development department of Nissei. He reckons he spends 50 hours at work most weeks and about 5 hours playing tennis or baseball; he also plays with his son at mock sumō wrestling and catching insects down in the little rice valley below Aoyama or up on the Sakurano hillside behind the shataku. He met his wife by introduction through a mutual friend who arranged for them to meet in a tea shop on the top floor of a department store. Six months later they married by a Shinto rite - "because generally people do it that way - it has no relationship to religion" - and have been married now for 7 years.

When both their children were born they took them for a miyamairi at a shrine in Aichi prefecture, where both of them came from. He says that they celebrate it as an old tradition for the child's sake, at the stages (kugiri) in the child's life. The same attitude is expressed for the 7-5-3 rite (which so far has only been performed for the son). He thinks that although there is some idea of gratitude for having brought up the child safely so far, he has "no special religious interest in it." It is "a bit like a birthday celebration, only more significant", commenting that birthday celebrations are a fairly recent custom imported from Europe and America, so the 7-5-3 rite is more traditional. They celebrate the Boys' Festival also and have a large festival display containing many traditional items, including some on which the family crest has been embroidered. The wife's parents bought these because they have three grandchildren whereas the husband's parents now have nine: their son was also the first grandson for the wife's

parents. Mr. Hattori is the third of four siblings and his elder brother also gave him a present of a warrior doll for the display. They make no offerings and perform no prayers at the stand, but they keep their New Year decorations until the Boys' Festival, afterwards throwing them out in the ordinary rubbish - a rather unusual and 'irreligious' act because most families burn them or take them back to a shrine after New Year. They say it is a 'custom' to keep the decorations until the Boys' Festival in May, but until recently they have often been to visit their parents at New Year so have not often needed to put up the decorations in the genkan of their apartment.(1)

For both the miyamairi and 7-5-3 rites they bought mamori safety charms for the children. The eldest child's mamori is now attached to his satchel for kindergarten but the daughter's one is kept in Mrs. Hattori's jewel box. They think mamoris do protect to some extent, especially for traffic safety, but they do not have one in their own car.

Both parents together chose the names of their children, using seimeihandan to find auspicious names. They say "it has been ascertained that people with bad stroke counts in their names often do bad actions, ending up as criminals", so in order to be 'on the safe side' they prefer to avoid any 'bad'stroke count, (warui jōken o sakeru), but are

---

(1) The decorations can not be put outside because they can not be attached very easily to the metal doors of the flats.

not particularly interested in trying to find a 'very good' combination so that their children would become rich or successful. Their children's names are Hiroyuki (洋 之) for the boy, decided on because the 'Hiro' part means 'ocean' and also has connotations of 'broad-minded' or 'magnanimous' (ōraka), and Akiko (晃 子) for the girl, using this one of the several ways of writing this name in order to have both a 'good' stroke count and a meaning of 'bright child', in the hope that she will 'think brightly'.

In the previous year they have been to only one temple and one shrine, both of these "for sightseeing". The shrine chosen was the Ueno jingū, and the "sightseeing" trip was their New Year shrine visit which Mr. Hattori describes as a "custom with no religious meaning". Nevertheless, he does pray for a healthy year for himself and his family and thinks it "might have some effect", whereas his wife is more sceptical and thinks it has no effect. He thinks it is good for the children for them to go once a year but for the past two or three years his main impetus to go on a New Year visit came from the fact that they were visiting parents in Aichi prefecture and he thinks they might not have bothered if they had been at home for New Year while the boy was younger.

New Year is the principal time when they visit their parents, who live about 100 kilometres away from Ueno, when they stay for about 2 or 3 days. Such visits take place

about 3 times a year and sometimes the parents come to stay in Ueno for a day or two. However, when the Hattoris go to Aichi prefecture they never perform any grave rites because both sets of parents are alive and healthy. The wife's parents look after their ancestral graves, and her brother will take over the principal responsibility for them later, while the husband's father is a 3rd son with no direct responsibility for the family's ancestral graves. In the future, however, the Hattoris are prepared to take on grave and Butsudan rites for Mr. Hattori's parents when they die. Although he denies any belief at all in any afterlife, heaven or hell, and does not think the ancestors would punish them if they neglected the grave rites, he does say that divine punishment (bachi) in the form of a car accident or bad news can come as a result of neglecting one's deceased parents. However, he does not really know why he thinks this, because he does not know whether or not he believes in any higher being (the 'a Being above man and nature' asked about in the questionnaire) and he does not believe in Fate.

Although he denies any belief in an afterlife, and says he does not fear dying because it is something which is inevitable and he can do nothing to evade it (shikata ga nai, or shō ga nai, it can't be helped') he does recognise that his willingness to take on the ancestral rites in the future appears to be a contradiction, especially as he

does not believe in the existence of any kind of spirits (reikon or rei) surviving death. However, he says that the ancestors do in one sense 'survive' and that is in his subconsciousness (senzai ishiki) or in his 'heart' (kokoro no naka ni). He also uses the term omoide 'recollections' or 'memories', to describe where the ancestors live, as far as he is concerned. When visiting his wife's parents they bring an offering for the Butsudan and bow before it while placing the gift there. He calls this a "custom" (kanrei) and an "expression of thanks" (kansha no hyōgen) which he compares to the bringing of a gift (miyage) when one visits anyone else: one cannot go without one. His wife, who also denies any belief in an afterlife,agrees with him and adds the comment that they take the gift as a way of fulfilling some kind of desire for "personal fulfillment" and gain some "personal satisfaction" (jiko manzoku) from fulfilling the customary expectations.

During his first year at middle school Mr. Hattori first drew a mikuji and has done so twice since then. He says they are like "omens" (engi) and says that he at first did it "half out of interest" to see if the things came true; however, he now says he does not believe that the mikujis come true and says that those who do consult them are "superstitious" (engi o katsugu), using an expression which is at the same time a word-play on his original comment about mikujis being like "omens". Once, as a teenager, he also looked at a book on astrology and tried to work out his own horoscope but he now calls it "a kind of game" and dismisses it as such. He never reads his horoscope now in any newspaper or magazine and has never consulted a palmist or other kind of professional fortune-teller.

The summer before he was interviewed Mr. Hattori took his son along to the Jizō festival in the Nissei factory but his wife did not stay for all of it because she was nursing their infant daughter and also had to go home to prepare their evening meal. Mr. Hattori's opinion about the Jizō festival is that it is a pleasant entertainment for the children but they do not make any offerings to the Jizō or pray to it. He has not really thought about any religious side to it so is at first agnostic about whether Jizō has any effect at all on the children, then decides that there is no effect, commenting that the only benefit they receive from Jizō consists of the sweets given by the jichikai as prizes in the song contest!

(2) A relatively 'non-religious' woman: Mrs Kimura

The Kimuras live in a medium-sized house of Aoyama and have an income level perhaps a little below the median for Aoyama, Mr. Kimura earning 245,000 yen monthly plus a twice yearly bonus which in 1980 was doubled to 1,000,000 yen on his promotion to kachō level in an electrical firm. On the other hand, he no longer receives any direct overtime pay even though he is often at work from before 8.00a.m. until 8.00 or 8.30p.m.(2) Often he needs to go on business trips to other parts of Japan, receiving 100,000 yen every 3 months for travelling expenses but in fact using considerably less than this by staying overnight with friends. His wife

---

(2) Having to travel into Kyoto for work, he usually leaves home about 7.00a.m. and often does not return home until after 10.00p.m. sometimes not until after midnight if the firm's auditors are there or there are similar periods of heavy work.

seems to take pride in being economical - she says it is perhaps because of being brought up in a small town during the post-war reconstruction period - so she saves up the advertisements which come with the newspaper to use the blank rear side for note paper, keeps a careful eye on the latest bargains at the supermarkets, keeps the family savings (which she administers) in four separate bank accounts - two in the name of each of their two children - none of which exceeds the 3 million yen tax-free limit, and seems embarrassed to admit to buying a new stero with her husband's bonus. The bonus itself is usually saved except for 100,000 yen sent to each set of parents and any amounts needed for major work needed on the house. Their children, a boy aged 8 and a girl aged 5, will eventually benefit from some of the savings if they are needed for school, university or wedding expenses, but partly saving has simply become a habit for its own sake.

This attitude to money affects some of her attitudes to religion. When they married 9 years ago (having met each other a year before that while both working for the same firm) they decided to have a Christian wedding largely because it was the cheapest. To some extent Mr. Kimura was predisposed towards choosing Christian rites also because his mother had once belonged to a Christian church and he himself had been christened as an infant, but neither are involved with any church now. For a while the children did go to a Sunday School, for its educational value, and Mrs. Kimura did start to attend a church "for the sake of the interesting sermons" because she had been helped by the pastor's advice regarding the bringing up of children, but

soon she began to find the style of service and the hymns too boring and old-fashioned to interest her, so she stopped going. She lays great stress on the education of her children, very conscientiously choosing suitable library books for them and discouraging them from reading comics or watching television too often, so she sees Sunday School and any Christian influence largely in terms of its educational and "moral" value (since she recognises the need for some kind of moral guidance which she thinks is missing in the schools) rather than in terms of its religious content.

Her attitude to education is partly a result of a family tradition stemming from her grandfather, who was a distinguished professor at Tokyo University and whose children mainly obtained posts in government or in large companies, initially through their academic success. The exception, however, was Mrs. Kimura's mother, who married a small businessman whom she met while she was evacuated from Tokyo during the war. Her family seems to have never fully forgiven her marrying 'beneath her status' and they seem to have disapproved of Mrs Kimura's marriage also on similar grounds, that she could have found someone better.(3) To a large extent her

---

(3) She had previously been going out with a boy whose family was the third wealthiest in that prefecture, but she had doubts about whether she loved him for himself or for his money. While he was studying abroad she met her present husband and, in the face of general pressure from her family to marry someone, and specific pressure from Kimura-san to marry him, she eventually consented. Sometimes she seems to regret that she did not marry her former boyfriend (who is now also married)

family's criticism died down once she bore a male child but she still has hopes that her children, and her son in particular will become distinguished academics and will redeem the family reputation and tradition of academic success. For this reason she chose the Kitano shrine in Kyoto (the kami of which is a deified scholar who has become the god of learning) as the shrine for her son's miyamairi rite. Despite the educational aspect of her choice, she still tends to deny any 'belief' in the rite's efficacy - perhaps partly because it remains to be seen how he will fare academically. She says it is a "custom, to pray for the child's happiness" and calls both miyamairi and the 7-5-3 rite "stages" (kugiri) in the life cycle, "like the nodes (fushi) of bamboo". More important than either of these, she says, are the entrance ceremonies for schools. Whereas the 7-5-3 rite is mainly an excuse for dressing up the children and taking photographs to be kept in an album for the "memory", the entrance ceremony to one's school marks the beginning of a vital stage in one's life which will ultimately determine one's course and fortunes in life to a considerable extent.

While Mrs.Kimura herself was a student at one of the medium-ranking universities in Tokyo she stayed with some of her maternal relatives and at night overheard them talking about her and saying she should have gone to a better university. She herself was frustrated at her choice of university, because she had chosen it on the advice of her chemistry teacher at school and had chosen to study chemistry because it was what she had gained the highest marks in, rather than mathematics which she enjoyed most. When she began at that university she found it specialised mainly in

physical chemistry whereas she preferred organic chemistry. Such experiences have made her aware of the importance of allowing her children to develop their own talents and skills, and although she tends to encourage academic ones (including the whole family rising in the morning in time to hear the 6.00a.m. N.H.K. English course) she also recognises the need for music and the arts. From an early age her son has taken piano lessons and her daughter recently began to learn the narimba (a kind of xylophone) because it is such an unusual instrument that as an adult she may be able to make a living out of teaching it, and to that extent would be able to support herself if need be "in an emergency".

In this wider context Mrs. Kimura's attitudes to some of the family's 'religious' activities take on an 'educational' colouring. Partly because of the anthropologist's interest in the rite, she decided to take her children to see the Ueno matsuri in 1981[4] saying that it would be "good for them" to have the opportunity to see it for themselves at least once in their lives. In the same way she notices in the newspaper (which she spends about 2 hours daily reading in

---

(4) She had accompanied the anthropologist and his wife to interview the priest of the shrine which organises that matsuri and acted as interpreter. (We had been in Japan only a few months at that time; later my wife and I were able to understand Japanese sufficiently to conduct the interviews by ourselves.)

detail) if there are special events at Shinto shrines or Buddhist temples such as a display of antique mikoshi open to the public for a few days only each year - or if admission charges have been waived at a famous temple on a particular holiday. It is then that she may take the children to the temple or shrine for "sightseeing", but stressing the educational aspect of it. She estimated that she had been to such places "3 to 5 times for sightseeing" in 1981, but "none at all for special purposes, e.g. to pray (o-mairi suru)".

Nevertheless, when she goes she sometimes prays "out of duty because others do it", although she says that "nowadays there is nothing special to pray for but if my son had an entrance examination then I would pray."

In 1982 she did not go on a New Year's shrine visit, because she was too tired after working so hard on the previous day's cleaning up the house that she "just slept" at New Year. However, her husband and children did go together to the Heian shrine in Kyoto and she herself would have gone had she not felt so exhausted. She thinks it is "important to have a new feeling (kimochi) to face the new year, so the Shinto purification for wiping away the old sins, plus New Year's resolutions to produce a kind of 'new heart', help to create that kind of an atmosphere for a while." However, her principal reason for considering the New Year visit important is educational. In her own words,

"These rites are important for bringing up children so that they can do their best (ganbaru). Such rites are like the knots (fushi) in bamboo and all of them - the 7-5-3 rite, coming of age at 20 and so on - are important stages (kugiri) in the children's upbringing. Nowadays, with fruit and vegetables sold throughout the year with little or no seasonal variation in what is available, these ritual events become much more important as marks to break up the year. Otherwise life becomes very uniform and the children become very lazy in their studies."

She also attributes the fact that school children are increasingly using less formal and less respectful language in addressing their teachers (using similar forms to those they use for their friends) to the children now participating in fewer formal occasions such as New Year. "Because children are not taught the proper respectful words and forms they should use to guests (like at New Year) or to teachers, what formal occasions do remain are important for the child's overall education and training."

Before marriage she used to draw mikujis "for fun", especially before entrance examinations for high school or university, but since marriage she has never done so. Sometimes before an examination she would pray 'by herself' - especially if she had not studied for it! At such times she would pray 'with all her heart' (issho kenmei) but in retrospect she says that she has "never really prayed seriously" or in earnest about anything so her prayers have had no effect. When at university she also had her palm read twice by a specialist, paying at that time about 500 yen per consultation, and at other times she had it read by a friend or read it herself from books. She takes

palmistry more seriously than either mikujis or astrology (which for her amounts to casual reading of horoscopes in magazines in the doctor's waiting room) but she sees palmistry more in terms of warnings than predictions. If, for example, it gives warnings of bad health she might eat or sleep more than usual and take better care of her health so that the illness of which she had been warned would not happen. Without going into specific details, she says that before marriage she sometimes consulted palmistry in decision-making if she was unable to decide which course of action to take according to any other criteria. If she chooses one course after consulting palmistry but after a month or so that course seemed inadvisable she may change to an alternative course of action. She also used seimeihandan to choose the children's names, but both her husband and herself made the final choice out of a list of names which she had chosen, rejecting those with 'bad' stroke counts. She says it is "not too important" but nevertheless consulted it. At the level of professed belief, she says that "there are some things we cannot explain by science, which are outside of scientific explanation" so she thinks there must be some kind of a greater Being. She also thinks there may be "another world" for which she says the world 'believe' is too strong, as for her it is something she dreams about and wants to believe but can not bring herself to a point of faith to actually believe in it. When asked more specifically about the possible components of such a world, she says at first that she is open to the idea of heaven but does not believe in hell, then she changes the form of her answer to "I do not want to believe in a hell" (shinjitaku nai) a change in nuance very revealing about

the influence of the 'will' in 'belief' affirmations or denials when the informant lacks sufficient evidence to reach an objective conclusion. As discussed in the Introduction (ch.1), it involves an act of the will to say one either 'believes' or 'disbelieves' under such circumstances if neither is logically more 'provable' than the other, given the evidence available at the time.

The Kimuras visit the graves of the husband's grandfather and other ancestors in Kyoto most years but sometimes skip a visit if it is raining or they have other commitments on at the time. Mrs. Kimura says that if there is an afterlife or a heaven it is not likely to be attained by the observance of Butsudan rites or anything like that. If anything, she thinks it is by one's own actions or by faith, and more probably, she thinks, by her own actions. She says "Many people don't fully believe it is necessary to go to the ancestral graves at set times of the year or to worship, but they do so because if they don't the other relatives might see the untidy grave and accuse them of laziness."

Her own mother used to say the same thing and used to go to the graves only because the relatives of Mrs. Kimura's grandmother also went. So Mrs. Kimura herself expresses the same attitude which she attributes to others including her own mother: she goes to the grave of her husband's grandfather out of a sense of duty because she never knew him personally.

Mrs. Kimura therefore observes relatively few 'religious' practices, these consisting of occasional visits to shrines, temples or matsuri for their 'educational' purposes or to a grave of someone she never knew out of a sense of 'duty.' Her background and personal experiences make her place considerable emphasis on education, and most religious activities are conditioned by this. Before marriage she did consult divination at various times, and prayed before an important examination, but has ceased to do so since marriage except for using seimeihandan to assist in choosing the children's names. Her marriage ceremony itself was a choice conditioned largely by her background and general attitude of thrift rather than any particular 'religious' motivations. Despite her being willing to 'entertain' ideas of a heaven and her acceptance of the concept of a greater Being, at the level of practice she is generally 'non-religious' and gives the overall impression of being a 'materialist' rather than in any way a 'religious' person.

The six remaining individuals to be portrayed display a variety of facets of 'religiosity' which are indicative of 'types' even if not all their features are necessarily 'representative.' To some extent each of them has been selected because of one or two aspects of their religious experience which have not been discussed in depth in earlier chapters - such as the worship of the moon or of Jizō, or premonitions through dreams about a death in the family. These are all features which were revealed in some of the final set of 30 interviews and which were not

asked about systematically in other interviews, so the overall incidence of these religious experiences is impossible to ascertain from the available data. However, in other respects their experiences and attitudes are very similar to those of many others interviewed, so these are probably reasonably 'representative' of overall trends. Those selected for inclusion in this sample for personal profiles are also chosen to some extent because most of them are not people mentioned in case studies in the previous chapters.

It would be possible to construct more fragmentary profiles of people like Dr. Satō from the scattered references in other chapters, but those selected for the following case studies are generally people somewhere in the 'middle' in terms of religious behaviour. Only the older people seem conspicuously more 'religious' than others, but even in this regard those chosen are fairly 'representative' simply because older people do tend to be involved in relatively more religious activities because of their stage of life and having the time available for such practices. 'Religion' in old age is to some extent another life cycle stage, and is perhaps also 'preparatory' to death in the minds of some.

A young man: Kinoshita-san

This 23 year old man lives with his parents in Aoyama and, after graduating in law from a university in Kobe, now works for a small local firm which manufactures some specialist electrical equipment. He considered several types of work and weighed up the advantages of security in a large firm against the prospects of rapid promotion and probably greater scope for 'individuality' in a smaller

firm. In the end he chose the smaller, expanding business because it appears to have greater potential for the future and because it will be sending him on frequent business trips abroad. The firm chose a dozen new trainees in 1984, almost all of whom had travelled abroad and displayed unusual initiative in it, such as doing voluntary work in S.E.Asia, or, in Kinoshita-san's case, going on trips, first with a friend and later alone, trekking in Nepal and India. To that extent he does stand out as a little unusual, since most of his contemporaries had not been so adventurous (going abroad only with a package tour, if at all) and had aimed for the security of the larger companies. They are the 'typical' men whose 'safety' or 'security' is sought by employment in a large firm like Nissei, whereas Kinoshita-san has perhaps a little more 'entrepreneurial' spirit. However, while recognising that he is taking a certain risk in joining a small firm, he also has his specialist training in law to fall back on if necessary and could change to a legal career, with a little more training, if his chosen firm were to go bankrupt. In that sense he is not staking everything on the smaller firm.

With one sister and no other siblings, Kinoshita-san is also likely to inherit a considerable proportion of his parents' property at some time in the future and at the moment he lives at home so has relatively few expenses. He can therefore afford to take the 'risk' of joining a smaller firm and is not yet thinking about marriage. By the time he is likely to marry (in his later twenties or early thirties) he will have become more established in his firm and may have a clearer idea of his promotion chances.

As chōnan, he will assume responsibility one day for his parents' Butsudan. At the moment he rarely prays there, only at Bon, sometimes at Higan and perhaps at other times when he thinks about it. Then he chants "Namu Amida Butsu" ("Glory be to Amida Buddha") for only a minute or so. He says he has a "quiet feeling" (shizuka na kimochi) when he does it, but says that the hotoke are prayed to only to suit his own convenience (jibun no tsugō no hotokesama) such as when he had entrance examinations for university. He says the hotoke are "dead people", the generations of ancestors (senzo daidai) rather than the Buddha. At Bon, Higan and on the nenki anniversaries of death (the time of hōjis), he goes with his parents to visit the family's ancestral graves on the west side of Kyoto where he helps clean up the graves and makes offerings of flowers and incense. He also bows to the graves as if in prayer but he claims not to believe in any afterlife. On further reflection, however, he was prompted by a question on heaven and hell to say that there "might be some world after death" (shigo no sekai) but "if there is, one would not be able to imagine it. It would be boundless (mugen) and would be somewhere without earthquakes or typhoons" - a description rather like the idea of a 'safe place'. In a sense, the whole idea of heaven and of salvation is the ultimate in 'safety' and 'security' so the 'motivation' for 'security' is ultimately satisfied only in heaven, because all other forms of security (employment, house, marriage and so on) are ultimately transient. Kinoshita-san knows what kind of ultimate security he would imagine, but at the moment he is more interested in other short-term goals.

His attitude to grave visits, however, is that they are a "custom" and "not connected with religion", "stages (kugiri) in the cycle of life" which make a "distinction" (kejime) in the annual cycle. If one were to neglect the rites, one would be accused of forgetfulness by other relatives. So it is a "customary ceremony" (shukanteki na gyōji), in his opinion, "not religious" - an interpretation which appears to correspond to his lack of belief in an afterlife...

When his father's mother became ill in 1983 and died of cancer, the whole family went to a shrine specialising in charms and prayers for cancer, but the grandmother nevertheless died. He says that they "did not really believe the grandmother would recover" but they went to the shrine overtly to appeal to the god for mercy (sugaru) but covertly to "beguile the mind and distract attention" from the illness (ki o magirasaseru).

Five years ago Kinoshita-san went to the Kitano shrine in Kyoto to pray for success in his entrance examinations for university. Although he managed to obtain a place at the university of his choice, he says the mamori he bought then has no effect in making him work better. He keeps it on the stand of his reading light and thinks he ought to take it back to the shrine but that is "too troublesome"

so he does not bother. However, as it is something obtained from a shrine he can not throw it away in the normal rubbish because if he were to do so he might experience some kind of divine punishment (bachi) (5)

Between the ages of 11 and 14 he participated in consultations of Kokkuri-san at school because it was "very popular".(6) He participated because all his friends were doing it, and "the girls in particular seemed to believe in it". They used to ask whether a boy or girl liked them, who they would marry and when, and the name of the person they would marry. Kinoshita-san himself did it "once or twice" for "play" (asobi) but claims that "nothing happened."(7)

If he buys magazines containing a horoscope column, he will read his horoscope but claims not to pay attention to it. He sometimes reads them, however, in his younger sister's fashion magazines ('An-an' and 'No-no'), and presumably he did not pick up the magazines only to see what they wrote about the latest fashions in female clothes.

---

(5) "Suteru wake ni ikanai. Kamisama no mono dakara, somatsu ni suru to bachi ga ataru"

(6) Although overall only 4% of the sample said they had consulted Kokkuri-san 40% of those aged less than 25 had done so, and 10% of those aged 25 to 29. It is therefore very common among school and university students, and its incidence may well be on the increase.

(7) Whether this claim is true or not, it meant that he was either unable or unwilling to discuss the matter in further detail.

Usually at New Year he goes with his parents to a shrine, where he puts 5 yen into the offering box as a kind of prayer for a good marriage partner.(8) The family do not go to a fixed shrine each year but to a large one in Ueno or sometimes in Kyoto. In 1984 they did not visit a shrine because they were ritually polluted by the death of his mother's father, although his sister did go at midnight with some of her friends from work (cf.chapter 5). He says that is for any reason they did have to pass a torii they would go around it rather than under it while they are in a state of ritual pollution, so then they would not feel obliged to go to pray at the shrine itself. Generally however, he realises that while ritually polluted one should not to into a 'hare' ('sacred', 'pure' etc.) place. This prohibition applied to him even though he did not attend any of the rites held by a Buddhist priest every Wednesday during the 7 weeks after the death, which his parents attended at the home of his mother's brother in Kyoto.(9)

---

(8) Go-en, 5 yen, being a homonym for go-en, an 'honourable relationship'.

(9) The grandfather died on Thursday, 10th November 1983 so the Wednesday is the 7th day by inclusive rather than exclusive reckoning.

An unmarried woman: Takeuchi-san

Miss Takeuchi, aged 30, also lives with her parents in Aoyama. She works as a librarian and general assistant in a centre for local archives incorporating a small museum of local history. It is situated in an older part of Ueno and on the way there, through some side streets from the bus stop on the route from Nishiyama, she passes every working day an image of the Bodhisattva Jizō. As she passes it she often stops to pray, her most frequent kinds of prayer being to meet a boyfriend, for healing from illness and the health of the family. Before the family moved to Aoyama they had lived in a smaller, more rural town in the same prefecture and there she had grown up praying to Jizō, not really knowing "why" she did so, simply because she had been taught to do so as a child. She used to pray for success in examinations while she was at school, in addition to the kinds of prayers already mentioned. Now it is to some extent a kind of habit, but she says it would be "rude" not to greet the Jizō on her way to work, so if she is short of time she bows her head to it and says it is like greetings to other people she meets: "Konnichi wa", her usual greeting, is that used among people generally, but she says that to Jizō it is said a little more politely (teinei ni).

She also prays to the moon, especially when she sees the full moon or crescent moon (mikazuki). Her requests are the same as to the Jizō , but sometimes she merely puts her hands together and stands in adoration or admiration because "the moon is beautiful."

In the house there is a Butsudan containing a death register (kakochō) and the ihai of her paternal grandparents and of her grandmother's mother.(10) Every day her mother places tea before it and prays. Sometimes, "when she thinks about it", she puts rice there too, and always puts rice there every day for 5 days over the Bon period. The daughter usually helps in this also because she is the only child and will inherit the responsibility for it. At the moment she does not report to the ancestors about events in the home, but says she will do so in the future when she takes over responsibility for the rites herself. She thinks at death a soul goes somewhere but she does not really know where.

Several years previously the parents bought from a shrine in Kyoto a fuda for protection from fire in the kitchen which the affixed "high up in the kitchen" on a post. They also have a fuda for the god Kōjin (11) next to it, and Miss Takeuchi prays every morning to both these fuda. Twice she has written a prayer plaque (ema), both times at the Kitano shrine in Kyoto as prayers for examination success. Since she passed the exams she considers the prayers may have had some efficacy. "Often" she goes to shrines or temples "for sightseeing", about 7 or 8 times in a year, where she has a grave, serious or solemn feeling (genshuku na kimochi). There she prays for a boyfriend or for health and freedom from illness. She used to go with a friend from her

---

(10) She does not know why this ihai is included in the Butsudan.

(11) Sometimes pronounced Kōshin

schooldays until the latter married so now Takeuchi-san goes alone or with her parents at times like New Year or Setsubun. Normally at New Year they visit the family's ujigami shrine in the small town where Takeuchi-san grew up in order to pray to Kamisama for safety during the coming year, although they did not go in 1981 because her mother's mother had died the previous year.

Miss Takeuchi is an only child and feels considerable pressure from her parents for her to marry a yōshi. They have arranged many miai matches for her, but she has turned them all down because she does "not like such superficial arrangements". The parents want her to continue the family line (ie) which the daughter thinks is "only for the sake of having grandchildren to carry on the ie (family). They say I should marry someone by miai who they think would be a suitable son-in-law, preferably a yōshi, and say that even if I don't like the boy and don't get on well with him I should be prepared to suffer by adapting to his ways and putting up with him (gaman suru) for the sake of the household and lineage (ie)." She does not like this and wants to be able to be more individualistic and to choose her own partner for marriage. She is not necessarily trying to find someone in a good company (a 'salary man'), although "it would be an added benefit", but is more concerned to find someone she can get on well with who has a pleasant personality. "What's best is someone I can feel easy about"(12) or, more literally, "someone I can feel anshin about".

---

(12) Anshin dekiru hito de areba ichiban ii.

For this reason she has often consulted fortune-telling in relation to marriage, but sometimes as an extra reason to give her mother a refusal when the mother tries to arrange a miai. The daughter used to check up the seimeihandan strokes and tell her mother that it would be disastrous if she were to have that surname, but now that the mother says she would have to put up with whoever the parents found, this excuse no longer carries any weight and the two generations become more polarised. About 6 years previously a guest at the home offered to work out the daughter's fortune by seimeihandan and to read her palm. He said she would marry within a year or two but as the prediction obviously has not come true she remains sceptical about it.

She is more interested in astrology, however, and a man at work who does it as a hobby once worked out a character analysis for her by her date of birth (seinengappi). In one of her weekly magazines is a horoscope column which she usually reads and at the library she looks in the horoscope columns of other periodicals too; however she claims that she has "not too much concern with it" despite her more frequent than usual consultation of it. Once or twice a year, sometimes more, she draws a mikuji, especially at New Year, to see if the year will be one of good fortune (kichi) or very good fortune (daikichi) - particularly regarding her marriage chances and the endan (marriage proposal) column. Although she says that the mikuji oracles do fit sometimes, if she draws a 'bad' one (kyō) she would draw another one

because it would be difficult or inconvenient for her (komaru) if the 'bad' oracles were to come true. She does not necessarily think the 'bad' would be avoided this way but she prefers to read 'good' oracles and not to know about anything bad coming (a kind of 'ostrich policy').

Overall, Takeuchi-san seems to be a relatively 'religious' young woman from a traditional and 'religious' rural background who has been influenced considerably by her mother in earlier life regarding practices such as praying to Jizō.

However, there is increasing generational conflict regarding the daughter's marriage, with the parents putting more and more pressure on their daughter to marry and continue the lineage but the daughter becoming increasingly resistant to their demands. She resents the idea that she has to "be patient" or "put up with" (gaman suru) any husband chosen for her but prefers to make up her own mind and have, if possible, a 'love marriage' (ren'ai) of the type increasingly popular among the younger generations.

A younger married man

In one of the smaller, 'A'-type shataku apartments live Mr. and Mrs. Mita, aged 32 and 29 respectively, with their one year old daughter Yuri. He is originally from Tokyo and she from Sapporo and they met while both were studying at Hokkaido University in Sapporo. He joined Nissei shortly after his graduation but they were moved to Ueno in 1981, about a year before Yuri was born. Mr. Mita is now the boat team coach, whose views on company rites were given in Chapter 12.

In their apartment they have no Kamidana or Butsudan, but as chōnan Mita-san expects to take over the responsibility for his parents' Butsudan in the future. Since he expects to inherit his parents' house in Tokyo also, the Mitas, unlike many of their neighbours, are not saving up to buy a place of their own: he does not expect his only sibling, a married sister, to receive much share in the inheritance. Up until the age of 18 in Tokyo he very occasionally prayed at the Butsudan when there were special rites such as a hōji and he sometimes visited the graves of his grandparents and more distant ancestors, when he prayed and presented offerings of flowers, rice-wine (sake), rice, fruit and 'dumplings' (dango). He says he believes in reincarnation and in a heaven and hell but does not particularly think that the ancestors are vindictive if the grave rites are neglected. In the future when he inherits responsibility for the family Butsudan he will probably do the rites "now and again" but not daily -whereas his wife thinks she would probably do the rites each day "because that is the difference between male and female work", she says. She was brought up in a home with a Butsudan where the priest visits every month on the meinichi of her grandfather's death and where the family used to report how they were getting along (kinkyō hōkoku) and events such as the birth of a child, so she is used to performing such ancestral rites. Her parents used to say that if the rites were neglected the ancestral spirits would wander around (mayou) and become angry so one has to do the rites to prevent this from happening. However, she does not know where she thinks the ancestors are; when she visits their graves she thinks they are inside the graves, but she does not really know where they might be in any afterlife.

At New Year they go to the largest shrine in the city they are in at the time - either the Meiji jingū in Tokyo when they visit his parents or the Hokkaido jingū in Sapporo when they visit hers. At that time Mr. Mita says he has a solemn (genshuku) feeling. He prays for safety for a further year for himself and his family, and buys a mamori for his car as an "expression of hope" (kibō no araware) and for peace of mind (kiyasume). He says he does "not strongly believe" and thinks it is like being superstitious (engi o katsugu).

The Mitas have 3 other mamori charms about which they express similar attitudes. One of these was given to them by Mrs. Mita's younger sister when she came to visit them from Sapporo: they took her 'sightseeing' to a famous temple near Ueno so the sister decided to buy it as a gift for her hosts. Another was given by Mrs. Mita's mother when Yuri was born and they were together in Sapporo for several months (13) and the third was bought shortly before she returned to Sapporo for Yuri's birth. The couple had been for a drive in the country around Ueno when "by chance" they happened to come across a shrine specialising in charms for safe birth (anzan). As Mrs Mita was 8 months pregnant then they decided to buy one. At the time she was also wearing the hara-obi given to her by her husband's mother but it did not have a formal mamori attached to it, instead having a

---

(13) For a variety of reasons she remained there for the unusually long period of 6 months, repeatedly postponing her return to Ueno first on account of the cold weather being unsuitable for travelling with an infant and later because she wanted to wait until the child's 3 month check-up, the Girls' Festival in March and eventually until 'Golden Week' in May.

prayer inscribed on it in brush calligraphy which she considered more a "decoration" than a mamori. She says it made her feel better to have a formal charm, and her husband expressed no objection to buying it for her.

Mr. Mita has never had his palm read, denies any belief at all in astrology, palmistry or any other kind of fortune-telling but did consult a seimeihandan dictionary in choosing Yuri's name. He says he likes the idea of freedom so he chose the 'yū' of the word for freedom (jiyū 自由) but had to search to find a character for 'ri' which had an auspicious stroke count, eventually finding the character 莉. Nevertheless, he is doubtful about what influence at all it might have on the girl's future. As long as it is not a bad but a good name, it will be alright, he says (warui yori ii hō ga ii), but as she will be given another surname at marriage anyway "it can't be helped" (shō ga nai). He says that although he does not fully believe in any "effect" which it might have upon the girl's destiny, it is "better to choose a good, suitable name rather than a strange name." His wife's comment on the matter indicates another factor in her attitude, namely the question of what others will think, because she says that "others will look at the name and judge, and as the child will have to grow up and live with the name it's better not to have a strange name."

Behind their apartment block is a small shrine in the hillside dedicated to the god Inari which was set up by the founder of this Nissei factory as a personal shrine for his own use. No formal ceremonies are performed there, but it is visited at New Year by Ueda-san, Ōkura-san and

Nishihara-san in their rounds of the shrines. Almost every day Mrs. Mita prays there - the only exceptions being rainy days - because she takes Yuri outside for a walk on the hillside where the girl likes to pick flowers, ferns or bracken. Yuri, says her mother, "wants to go up to the shrine and pray: she calls the god there konkon-sama (a child's name for the divinity)", but she has obviously been taught to do so initially by her mother even if now she thinks that is what they should always do. So Mrs.Mita also prays, for matters such as safety in the home or for the child's safe growth. They do the same as a family when Mr. Mita goes with them at the weekends or holidays; when they go for a picnic under the cherry blossoms at the top of the hill (for hanami) they all pray together at the company's Inari shrine there.

However, Mr. Mita's personal feelings about company rites have already been presented in detail, in which he denies any belief at all in their efficacy and says he participates only out of a sense of duty or obligation and because he would feel embarrassed if he did not take part. It seems, however, that he is exposed to a more subtle but similar influence at home from his wife. During the interview with him it seemed as if he tended to deny much personal belief in many of the things in which he in fact does participate. Mrs. Mita was also present for the first half of the interview, although partly occupied with the child, and her comments at various points seemed to shed

light on her husband's attitudes and the discrepancies between his professed beliefs and his practices. At work he participates in the religious rites because of feelings of obligations to others, and in the domestic sphere he also goes along with what appear to be 'more religious' feelings and practices in his wife. It is difficult to tell how far he has internalised his wife's attitudes and to what extent his scepticism expressed to the anthropologist (and with his wife present and often expressing similar views about mamoris etc. being for "peace of heart" rather than having any tangible effects) is in any way expressed in any other context and especially when involved with these practices. Certainly at work he does not dissent. Ironically, he chose the character for 'freedom' for his daughter's name, but in many of these practices he is far from being 'free' himself.

A younger married woman

Mrs Kosaka, aged 35, lives in a slightly larger shataku apartment with her 3 children, aged 8,6, and 2. She met her husband while both were on holiday in Hokkaido; it was a 'love marriage' (ren'ai) when she married, at the age of 25, a man two years her junior but is rather reluctant to let it be known generally that her husband is younger than she is.(14)

---

(14) The only other case of a wife older than her husband among those interviewed involved an Aoyama woman who was 30 years old when she married a 26 year old postgraduate student and moved in with his parents. It appears that her pregnancy may have precipitated their decision to marry at that time. (In Hendry's (1981:118) study of a village in Kyushu three of the five cases of an older wife were by ren'ai marriages, a pattern consistent with the ren'ai nature of these two cases in Ueno.)

As she is unsure what she thinks about any influence of the Chinese animal years upon one's character she tries to avoid such questions if at all possible lest the inquirer realise that she is older than her husband.

Her husband is a chōnan but has a younger brother with whom any future inheritance, including the cash value of their parents' house, will be divided equally. Therefore the Kosakas want to save up about half the cost of a house if they can. They are fairly irregular in the amount they save, sometimes saving up to a million yen or so and then deciding to use it on a new car or similar expense so then they start to save again. There is less incentive when they expect to inherit the value of half a house but might not inherit it for many years hence. Mr. Kosaka's parents in Tokyo have a Butsudan so when Mrs. Kosaka goes to visit them she always prays at their Butsudan as "greetings", normally presenting some gift there too. She rings the bell to "summon" the ancestors or to announce her presence and she thanks them for having had a safe trip from Ueno to Tokyo. She prays that the ancestors will rest in peace (yasuraka ni oyasumi kudasai) and asks that they will protect her husband's parents. The theme of 'safety' is evident in these kinds of prayers. If she visits them at New Year her prayers are a little different, praying for protection from the ancestors for the whole year, and thanking them for daily protection.

Mrs. Kosaka's mother died 16 years previously, so her father often joins a family gathering at the house of her in-laws. Her husband's brother married only a year ago and has no children yet so they join the rest of the family too. They all go as a group to the nearest shrine, that of

the family's ujigami , which was also the one chosen for both the wedding ceremony when Mrs. Kosaka married and for the miyamairi of her elder daughter; the place therefore has a "nostalgic feeling" for her when she goes there at New Year. This 'nostalgic feeling' (natsukashii kimochi) evokes, or is symptomatic of, the theme of 'memory' which is seen here in the context of New Year visits. However, she does not have such feelings if on the 2nd or 3rd of January they go to other shrines for "sightseeing" which she regards as simply an occasion for a family outing.

The 'feeling' or 'motivation' of 'memory' is apparent also in the way Mrs. Kosaka writes diaries. She did write a simple ikujinikki for each child, to record the amounts of milk drunk, the ages of starting to walk, weaning and illnesses and so on, which she kept up for one year each time. Now she only writes her own diary, though it includes elements of an ikujinikki in recording when the children first have or lose their milk teeth etc. She writes usually every day, sometimes every 2 or 3 days, a diary which at first was simply a household account book but which developed into a diary by beginning to include details of who came for dinner, what they ate, where they went and who they met. She keeps all her old diaries and about once a year she looks back at them and reflects on what she was doing at that time, one, two or more years previously. They sometimes serve the more practical purpose of telling her when a child had a vaccination or had an infectious disease such as chickenpox, but normally they are used only for reminiscences.

In the same way, she says she feels nostalgic when she visits a place where she used to live in Tokyo and when she visits her mother's grave. Depending on the weather and other circumstances she likes to go twice a year to the grave if she can, perhaps trying to fit in a visit at another time if she is unable to go at the usual expected times. At her mother's grave she has a feeling that her mother is near and watching her, and almost thinks she can feel her mother's presence there, whereas at the grave of her husband's parents she has no such feelings and, like at their Butsudan, prays for them to rest in peace. Her mother died of a sudden and unexpected heart attack at the age of 41, but the daughter says she had a premonition about a week beforehand th t her mother would die. She did not know whether to believe or take seriously the dream, however, because there are said to be two types of premonitory dream: the sakaiyume in which the dream is the opposite of the reality which takes place afterwards, and the masaiyume which is a true dream. In retrospect she decided that hers was of the latter sort, but at the time she thought she had dreamt it because her friend's father had died recently and she felt very sorry for her.

She feels there is some "greater power" at work in human lives also because of the experience of the whole family being together at the time her mother had the fatal heart attack. Mrs. Kosaka's father and brother had come in just a few minutes beforehand and she herself had felt very tired and wanted to go back home and rest just before the time her mother had the heart attack, so it meant that for a few minutes before the death the whole family were together, a fact which she attributes to the working of some 'greater power'.

At the time of her mother's death Mrs. Kosaka was 19 years old, and when 6 years later she became engaged to her present husband, on the night before her betrothal ceremony (yuino) a friend of her deceased mother had a dream, on the basis of which she told Kosaka-san that "your mother is very glad that you are engaged." Kosaka-san therefore thinks that in some way her own happiness adds to her mother's happiness, and in the same way she says of her mother "she left me her happiness."

Despite these experiences she says she does not know what she thinks about the nature of an after life. Her feelings about heaven and hell are that she does not like the idea of any judgement so she concludes that there is only a heaven in the other world into which all will enter. One could interpret such attitudes in the light of Mrs. Inoue's comments about not wanting to believe in a differentiated afterlife because then she would have anxiety about where her father had gone to. It might be that in cases in which a specific close relative has died, and such questions are considered in the light of that fact, then there may be a greater tendency to reject the idea of a hell. In any case, the specific rejection of concepts of hell and judgement does seem to be linked specifically with an idea that "peace of heart" (anshin) comes from this idea (explicitly expressed by Mrs. Inoue) or, conversely, that anxiety (fuan) comes from accepting any idea of hell as well as heaven (a feeling which seemed to be clearly implicit in Mrs. Kosaka's rejection of the idea of hell just shortly after talking about her deceased mother).

Either of these attitudes can be interpreted as aspects of the 'safety' theme (or its 'reverse side' in the 'ostrich policy' adopted by many when an inevitable fact appears to be beyond their power to alter).

Probably a similar rejection of punishment is envisaged when the one who is conceived as a potential punisher is a close relation such as Mrs. Kosaka's mother. Her attitude is that the ancestors (and her mother in particular) are neither sad nor angry and do not take revenge or exact punishment if their graves are not visited, but are "just happy if we do go to the graves". Since her father at present takes care of the Butsudan she does not have responsibility for these rites at the moment.

Similarly, her attitude to mamoris and fudas is that they settle her own heart and give peace of mind but she does not know if they have any effect or not. Her attitude both to the afterlife and to the possession of mamori is essentially one which gives most anshin (peace of heart) rather than one of 'scientific' investigation of 'truth'. All her mamori and fuda, however, were received as gifts from others rather than bought herself. Her husband's parents gave mamori charms to the children at the time of their respective hatsu-miyamairi ceremonies, and the local jichikai in the area she used to live in before moving to this shataku used to distribute a fuda free of charge to all households in the area as a kind of 'return gift' (o-kaeshi) for their regular monthly payments, some of which help to support a shrine matsuri in the area. When she moved to Ueno Mrs.Kosaka did not have the chance to return the fuda to that local shrine and so brought it with her and

has kept it since then.

Similarly, her mother-in-law and husband went with her to a shrine to buy a hara-obi for her when she first became pregnant. It has a 'safe childbirth' (anzan) prayer inscribed on it in red letters, which she afterwards took to a hospital on the Day of the Dog in the 5th month, where a nurse taught her how to put it on. Kosaka-san's attitude to it is that it gave her a "self-awakening" or "self-consciousness" (jikaku) in firstly, a feeling of becoming a mother, and, secondly, a feeling that a god is protecting the child. The hara-obi therefore gave her a "distinction in my consciousness" (ishiki no kejime) and that was the only noticeable or tangible 'effect' (kikime) which she could claim for the charm. In fact, for the second child she did not wear it all the time because her "body was very thin", the only example of an (albeit occasional) lack of conformity to the practice among those women interviewed about the custom. All three children had a miyamairi however. The eldest was taken to her family's ujigami shrine, the next to the shrine near to her in-laws' home, where the Kosakas had married, and the third at a local shrine in Ueno. For none of the children's names was seimeihandan used: both parents chose together by the meaning of the kanji, the sound (what goes well with Kosaka) and whether or not the name is that of someone they know or like. They did the 7-5-3 rite once each for the 3 children but she says it has "no special influence - we just took photographs", which they look at once a year or so, often at New Year when Mrs. Kosaka also looks back over her old diaries for the sake of "nostalgia".

She has hardly ever drawn mikuji oracles, and then "only for fun", she says, when she was a child or in her teens; only once has she had her palm read and then it was "a long time ago, with a classmate at school, just joking - we don't like to do it at all now" and she can not remember any details of it. She has never consulted Kokkuri-san or mediums and says that she hates the idea of consulting the dead or spirits in such a way, an attitude which is interesting in view of her apparent acceptance of dreams as media for messages from the other world. She sees the dreams as indicative of "some greater power" but has not always believed in the oracular power of dreams. One experience which has influenced her in this is that before she married, her father dreamt that she would have three children but Mrs. Kosaka says that she "laughed and could not believe it, but now it has happened." The third child was not planned either. When she discovered she was pregnant for the third time she did consider seriously the question of whether or not to have an abortion, but in the end decided not to because, she says, "I bore the first two for my husband and his family so they could have an heir, but now I had a chance to bear a child just for my own pleasure and companionship".

She considers it is important to teach the children to give thanks before a meal; and certainly well before her youngest child was 2 years old Kosaka-san had taught her to put her hands together and bow, saying "Itadakimasu" ("I humbly receive"), even before eating a piece of fruit or any

other snack. Kosaka-san sees this attitude of thankfulness as a prayer of thanks to the gods for their blessings and gifts. Kosaka-san sometimes experiences such feelings of gratitude on trips out in the countryside when she is sometimes touched by the sight of a majestic mountain, a beautiful sunset or the shining full moon. Then she experiences a feeling of the greatness of nature and of gratitude for all this beauty around her so she puts her hands together and bows to the mountains, sun or moon, without words. She says the object of her prayers is not important, but what she expresses in her prayer is a recognition of a "power in nature and above men or nature which might be God, but I don't distinguish what it is": however, the important aspect for her is that the experience gives her "peace of heart" (anshin). The experience and the 'peace of heart' is what is most important to her, not the theological ideas or formulations of belief associated with them.

Mrs. Kosaka therefore appears as a woman with a certain respect for nature and for life (which may have also been an influence in her deciding not to have an abortion) who thinks that some supernatural power greater than the visible order lies behind that which is seen and can sometimes become manifested in oracular dreams. Nevertheless she dislikes the idea of consulting that power through mediums or Kokkuri-san and she has hardly ever consulted any other kinds of fortune telling either. Instead of trying to formulate rational or coherent theological frameworks of ideas regarding the afterlife, the efficacy of charms or the nature of some higher being which can give revelations in dreams, she prefers an intuitive approach to religion based much more on feelings than

facts, although 'facts' may also become important in confirming to her mind the accuracy of an oracular dream. The feelings, however, take precedence in most situations, whether visiting her mother's grave, wearing a hara-obi or worshipping the moon - feelings of the presence of 'another', or , at the very least, feelings of 'peace of heart' (anshin).

An Older Man

Dr. Morita lives in Aoyama with his wife and 9 year old daughter. He is now 52 years old and as chōnan has responsibility for the ancestral rites for his parents, both of whom are dead. Their property, or what was left of it after the post-war land reforms, was divided equally among the 4 children and used for their education. The parents died in 1953 so Dr. Morita as chōnan has had official responsibility for the rites since then, but in fact the ihai of the parents are kept with those of the other ancestors, (a total of 29 ihai in all) in a large family Butsudan in the old house in Aichi prefecture now occupied by Dr. Morita's younger brother. Instead Dr. Morita keeps a 'Book of the Past' (kakochō) recording the death days of his 11 generations of ancestors. At a small Butsudan in his home he offers daily water and rice, sometimes tea, to his ancestors. He prays for health, reports significant events in the family (such as the birth of his daughter, her going to school or his starting a new job) but he says the principal (theological) purpose of his rites is so that the ancestors (senzo) will become Hotoke (Buddhas). There is a motivation of personal safety in this also, however, because he immediately adds that

if he did not perform the rites the ancestors would exert a "bad influence" (warui eikyō) on his family. Later he repeated the same words in relation to any neglect of grave rites, although he is unable to specify what kind of "bad influence" it would be, only that it is "something to do with cause and effect". Two or three times a year, at Higan and Bon, he returns to Aichi prefecture and prays at the graves of his 11 generations of ancestors. Sometimes (about 5 or 6 times so far) he has made reports there about the same kinds of events as those he reports at his Butsudan. He says the ancestors also come back at Higan so he goes to meet his ancestors then as well as at Bon.

His attitude to the afterlife is that he would like to become a Buddha (jōbutsu shitai). He says that if he does not become a Buddha he would "wander around" (mayou) and become a "nuisance" (meiwaku) to his descendants, which he does not want to do. Although he says he does not know about Buddhist teachings in much detail, he equates the attainment of 'Buddhahood' with 'heaven' in his own mind. 'Heaven' or 'Buddhahood' is to be reached, he thinks, by his own works, which he summarises as "not resenting people, not being a nuisance to people and most of all avoiding 'the cause and effect of sexual passion' (shikijō no inga)". He is less specific about positive actions beyond "helping people and doing good things". The ancestors, he says, eventually become Hotoke (Buddhas) through attaining Buddhahood (jōbutsu suru) but the ancestors are not so eminent (erai) as the"real" Buddhas such as Kannon or Amida. However, they

can protect their descendents and give prosperity to the household as long as they worship the ancestors: "if they don't worship, the ancestors won't protect them - like my wife: they won't protect her."

His wife is from Kobe and in younger life attended a Roman Catholic Church and went to a Catholic school, but, he says, she was "put off all religion by the nuns so she has no religion now". Therefore she leaves the Buddhist rites up to her husband. He himself says that he was not interested in religion in his student days but after he experienced some "difficult" (perhaps embarrassing) circumstances (kurushii koto) at work, the details of which he did not disclose, he "began to believe in the unseen world". So "in the last few years" he has begun to read books on Buddhism, partly because as chōnan he has responsibility for the ancestral rites. His family belonged to the Sōtō sect of Zen Buddhism and he does call himself a Buddhist, to some extent contrasting his religious identity as a "Buddhist" with that of his wife who is "not a Buddhist." His own mother taught him to pray at the Butsudan - he says his father was "not religious" - so he wants to teach his daughter to pray at the Butsudan too (perhaps partly to continue the rites for him after his death). However, his wife will not have anything to do with Buddhist rites and resists any of his attempts to involve their daughter in them. She says (according to her husband) that religion is to help the weak and so she does not need religion. In response, Dr. Morita thinks that the ancestors will not help

his wife because she does not look after them, so "it can't be helped ".

The Moritas met by a miai twenty years or more previously - he has forgotten exactly how long ago - and, after seeing each other twice a week, after their initial meeting at the go-between's house, they married 6 months later. His wife wanted to have a Christian wedding at her Catholic church in Kobe - indicating presumably some remaining Christian influence - and her husband did not regard the type of ceremony as particularly important so agreed to it. He would have liked to have done the miyamairi and 7-5-3 rites for their daughter but his wife opposed these so much that he gave in to her opinion, giving the rationalisation that even though he likes to see women in kimono his wife does not like wearing them. In the same way they did not use seimeihandan at all for choosing their daughter's name.

For personal matters, however, Dr. Morita might consult divination of various kinds. Sometimes he has his palm read at the Yasaka shrine in Kyoto, and he says the statements about his past often were correct concerning the fact that his parents had died, how many children he has and when he has had major illnesses in the past. He explains in detail about how his fate line affects his work and family life, but then concludes that he does "not believe it all - it is half play ". He says he believes "about half of it" because the future preditions, with the exception of when he would receive his doctorate, have usually not come true.

In 1978 he began to experience his gallstone illness so in October 1980 consulted a medium to find out if it were

purely a medical problem but was told to look after his ancestors well for his own prosperity. At times of illness or when his work does not go well Dr. Morita may "pray by himself" to receive help from the Buddha(Hotoke) but he does not know if it has any tangible effect because his illness has persisted. He does not 'pray by himself' at times when he is happy or glad, only when feeling troubled.

His own name is said to be "bad" by seimeihandan but he denies any belief in the influence of his name on his circumstances in life. Nevertheless, he has heard that a former Prime Minister, Yoshida Shigeru, had a "good" name and perhaps because of that he became so eminent (erai). The apparent inconsistency between being willing to attribute good fortune to a good name but having an unwillingness to recognise the implications this has for one's own 'bad' name seems similar to the 'ostrich policy' adopted by many people in other contexts. Dr. Morita's attitude to mikuji drawing is consistent with this 'ostrich policy', whereby he draws one once a year at New Year "as a kind of play, like everyone else.", and says " if it is good, I am happy, but if it is bad I want to forget it ".

It seems as if Mrs. Morita did not oppose their having a jichinsai performed when they bought their house plot in Aoyama, although it may have been that the builders also wanted it so she could not easily object. Dr. Morita considered direction-lore in deciding on a plan for the house but at the time they were feeling the inflationary effects of the 1972 'oil shock' and decided that to have the house checked by a professional geomancer would have been an expensive

luxury so did not bother. They chose the cheapest available method of having the house built, without any expensive alterations to the housing company's standard plan.

Dr. Morita is therefore a 'traditional Buddhist' who claims to have a religion, practises it, and appears to have an 'active' faith in the power of the ancestors to being about retribution for any neglect of the ancestral rites, as indicated by his fear lest this may have been the cause of his illness. His Buddhist practices are almost completely centred on those in the home, the only times he ever visits a temple being at Higan and Bon to pray at his ancestors' graves. Once a year at New Year he also visits a Shinto shrine "to renew the spirit", but not to any regular one each year. On account of his wife's background he was married in a Christian church, but from his point of view the official religious distinctions are unimportant, whereas his wife opposes both Buddhist ancestral rites and Shinto childhood ceremonies while apparently not advocating Christianity as a substitute. There is a tension regarding religious matters in the home which seems to have become more polarised as Dr. Morita becomes older. His gradually increasing involvements in Buddhist and other practices over the last few years, as compared to his attitude towards religion at the time of his marriage, indicate that for him there has been a general increase in 'religiosity' as he has grown older. To some extent this seems to be a result

of his status and responsibilities as chōnan to care for his own ancestors, and to some extent it seems to have been triggered off or helped along by his experiences of illness. In a more general and less distinct way, it may also be that as he grows older and becomes increasingly aware of the implications of his beliefs regarding the need for his daughter to continue the rites for him after his death, (so that he can attain to Buddhahood) he sees a need to encourage his daughter in these ways - but he is frustrated in this by his wife.

An older woman

In the same block as Dr. Morita and of the same age (52) is Mrs. Yoshida, who was introduced in Chapter 2 as one of those from a rural area who had married a kinsman. She also calls herself a Buddhist, as does her husband, both of whom were educated to no more than high school level, the only conspicuous difference in social background between them and Dr. Morita. Largely this reflects a difference in class background, in as much as Dr. Morita was from a former agricultural landlord class whereas the Yoshidas were from families of tenant farmers who acquired possession of their own lands during the post-war reforms.(15) Now Mr.Yoshida works as a 'salaryman' in a medium-sized firm while his wife is at home most of the day by herself, their three children having left home to work in other cities.

---

(15) For details of these see Dore (1959)

Mrs Yoshida therefore appears to be a semi-recluse. She has very little contact with her neighbours, and then only for casual greetings with the lady on one side of her, a younger working woman with whom Mrs. Yoshida has little in common. The Yoshidas live on the corner of a block and have very little contact with those living in the houses across the road or behind them, and this seclusion is in a way symbolised by Mrs. Yoshida's practice of keeping the shutters of her downstairs windows closed even when there is bright sunshine outside.

In the room adjacent to her living room are kept the family Kamidana and Butsudan. The family "has always possessed a Kamidana; my husband's great-grandmother originally had it, so when we moved here it came too". She remembers how when her husband's grandmother died, they put a white cover over the Kamidana to prevent the 'sacred' object from being polluted by the death in the home - a practice commonly reported elsewhere (cf. Namihira 1976:352, Smith 1974:137; Norbeck 1952:274-5). In the Kamidana they have 3 fuda - for the kitchen god, fire god and the ujigami of the household - to which they offer water and rice daily and fruit frequently, praying for a healthy daily life.

Their Butsudan is about 100 years old, dating from the time of her husband's grandmother. There they offer daily hot rice and water, often hot tea and flowers, burn incense and candles and put there any gifts received by the household. There are ihai of her husband's paternal grandparents, father and older brother but they also have a kakochō containing over 50 names. Their old kakochō was falling apart so in 1981 they copied it all into a new one and gave a copy of it to Mr. Yoshida's younger brother.

Mrs.Yoshida does not know who most of the people were, but at the bottom of each page is written in small writing the family's relationship to each person. Mr. Yoshida's mother is still alive but he inherited responsibility for the Butsudan when his father died; his mother lives by herself still in Osaka. They say that they did not receive much other inheritance when the father died because most of it went to his widow, so they have not yet received very much materially in exchange for taking over the Butsudan responsibilities.

It seems as if to a large extent Mrs.Yoshida confides in her Butsudan as a kind of confidante about her personal life. She says that whenever she is worried about something she automatically confides in the kami or hotoke, and this gives her a "sense of security" (anshinkan). This is particularly the case for the kami because she says that it is "more important to esteem the ancestors than to expect them to influence or have any effect on one's life".

Mrs. Yoshida was the only informant to mention putting out separate food at Bon for the wandering spirits (muenbotoke). She says it is a kind of segaki rite (even though there is no priest to recite sutras), and it consists of putting out a tray to the muenbotoke identical to, but separate from, the tray put out for the ancestors in front of the Butsudan. On each tray there are 5 bowls or dishes in a fixed order containing Buddhist vegetarian food (shōjin ryōri) such as rice, muchrooms and fruit, plus a pair of chopsticks. Special 'welcoming dumplings' (o-mukae dango) are part of the fare as festive food for the returning ancestors.

One of the items emphasised by Mrs. Yoshida is the putting out of water because, she says, "when people die what they want most is water. This is especially so if they go to a hell." She says, "while I am alive I want to do good things so that I do not go to hell." and thinks that one's final destination is decided by the King of Hell, Emma-san. This appears to be an 'active' belief as far as Mrs. Yoshida is concerned and the fear of hell does seem to prompt at least some of her frequent rites for the ancestors.

She also has two old scrolls, one of which depicts Bodhisattva Jizō. This one she puts up in her Butsudan for the Jizō festival on the 24th August, even though her children are now grown up, while the other one, depicting Kōbo Daishi (or Kūkai, founder of Shingon Buddhism) she puts up on "other special occasions". She says about Jizō, "he is always near you, like the hotoke, and so from an early age you put your hands together and pray that you do not receive any injuries". Every year she goes to the Aoyama nōryoshai where she normally is a spectator, but in her younger days used to participate in the dancing at Jizō Bon festivals. For her the rite still carries some 'religious' meaning even though there is no overt or visible object of worship in the Aoyama festival. It is pleasant for the children, she says, because they receive gifts of sweets, but she thinks these are given as if on behalf of Jizō rather than simply by the jichikai.(16)

---

(16) Perhaps this attitude to Jizō is a precursor for the more recent popular adoption of the Santa Claus cult.

While pregnant she used to pray sometimes to Jizō and present offerings before the stone image for the deity's protection on the child. She bought her hara-obi from a temple in Osaka (dedicated to the deity Kannon) which specialises in safe childbirth. The obi's purpose, she says, is to keep the child safe, and the mamori attached to the hara-obi she later attached to each child's belt at the waist while they were young. The fudas for safe childbirth she kept in the drawer under her Butsudan but renewed them each year as fuda for the children to develop healthily. Each year she also goes to a shrine to write a gomagi (prayer plaque). She does this at New Year, Setsubun and Higan each year - an unusual example of regular shrine visits at Setsubun and Higan. However, she is unsure whether or not her prayers have any effect: "it may be only one's feelings (kimochi), to calm them down".

For her principal yakudoshi she went to the same shrine[17] in Osaka as she had bought her hara-obi from. She says that the yakudoshi is a stage in the body's cycle when one is more susceptible to illness but she attributes her lack of illness that year to the fact that she prayed with all her heart (isshokenmei) before her Kamidana and Butsudan. As a variant on the idea that a male child born in a yakudoshi takes away the 'calamity', Mrs. Yoshida says that a female child is an even greater misfortune and "in olden times" in her native village there was an idea that one should abandon a female child born in a yakudoshi by leaving her on someone else's doorstep.

(17) This is in fact a combined Shinto and Buddhist (Shinbutsu) institution where both kinds of deities are worshipped together.

The Yoshidas had no 'religious' wedding ceremony because they were already related genealogically and the ceremony took place at a relative's house. Setsubun was chosen as the date, however, and every year Mrs. Yoshida goes to a shrine at that time in the hope of catching a rice-cake thrown out to the crowd by the priests, the catching of which is said to bring good luck for the coming year. When their children were born they took the names of relatives to give to their daughters but for their son asked a neighbour who was a seimeihandan specialist for her advice; the neighbour suggested a variety of auspicious names which were then written on pieces of paper put face down in front of the Butsudan, and the one chosen by Mr. Yoshida's mother with her eyes shut was deemed to be the choice of the ancestors. All 3 children were taken for miyamairi and 7-5-3 rites, and even though boys are normally taken only at the age of 5 and girls at 3 and 7, the Yoshidas decided to take each child three times in all. Nevertheless, she says she does not know what the "religious meaning" of the "custom" may be, but as a parent she wants to bring up her children lively and healthy so she participates in these, as it is "an old tradition, to pray for the children's growth". Even so, she says the "ancestors and Hotokesama are much more important than these ceremonies".

Each year at New Year the Yoshidas travel to the shrine in Osaka where they went for the hara-obi and yakudoshi visits. She goes there because she has "always believed in the efficacy of the god of that shrine" so prays there "to pass each year safely".

"Often" during the year she visits other shrines and temples, particularly those in Kyoto and Nara. She goes to these shrines and temples with her husband, who, she says, is "very enthusiastic" about such visits. She herself says that when she was younger she was not so interested but as she grows older she becomes more and more interested in such places - a subjective assessment of some increasing degree of 'religiosity' concomitant with increasing age.

In many ways Mrs. Yoshida is unusual in retaining many rural practices such as the setting out of offerings to the muenbotoke and the importance she attached to Setsubun. Her 'intimate' attitude towards the ancestors seems to mark her out as particularly 'religious', and this attitude is consistent with her semi-recluse behaviour in relation to neighbourhood relationships.

Mrs. Yoshida herself admits that her interest in shrine and temple visits has increased as she aged, but it seems that this process, which is probably common to many people, has a different starting-point depending on the rural or urban background of the person. For Mrs. Yoshida, a rural 'predisposition' to certain religious behaviour has continued in an urban context to a considerable extent and has retained many features which seem to have largely disappeared among some of her urban neighbours. In this there may be evidence of specific differences between rural and urban areas, with some features disappearing while others remain strong. This question of secularisation will be taken up further in Chapter 14.

Conclusions

A study of 8 individuals has indicated several idiosyncratic aspects of behaviour such as premonitory dreams or moon worship, the incidence of which may be much greater than is revealed by these few cases, because these were aspects of Japanese religion omitted from the questionnaire or formal interview data.

However, the pattern in each person's life represents a distinctive configuration of elements which seem to be drawn together through a person's character, interests, marital situation and life experiences. A relatively 'non-religious' man like Mr. Mita married to a 'more religious' wife may end up participating in events about which he holds private unexpressed doubts, whereas in the Morita family a 'non-religious' wife resists the attempts by a 'religious' husband to involve their daughter in Shinto or Buddhist rites. Similarly, generational conflicts like those in the Takeuchi family can focus sometimes upon religious attitudes, but these, especially fortune-telling, are invoked to justify a decision already made. There is a great variety of practices and individual configurations, brought together by particular circumstances, but all these practices are those which to a large extent are motivated by the basic themes of 'safety', 'memory', 'purity' and 'pollution' and 'age'. The theme of safety is conspicuous in the use of mamori

charms on a hara-obi, but this practice in itself relates to both 'age' (or life-cycle) for the infant and to the theme of 'illness' (in the sense of needing medical attention and experiencing physical change) for the mother (cf. also Ohnuki-Tierney 1984:181-4). Vocabulary connected with 'safety' such as anshin ('peace of heart') or anshinkan ('sense of security') are expressed in many contexts, from the possession of charms in one's car (e.g. Mr. Mita) to the sense of supernatural protection afforded by the kami (cf. Mrs Yoshida). The theme of 'memory' is apparent in Mr. Hattori's attitudes to the afterlife, but it also permeates the attitudes of those who do express some belief in survival after death.

However, all participate in ancestral rites to a greater or lesser extent, either through responsibility as successor (Mrs. Takeuchi), fear of ancestral retribution (Dr.Morita) or a feeling of the importance of respecting the ancestors (Mrs. Yoshida). Mrs Yoshida's view that it is more important to 'respect' the ancestors than to expect them to have any influence on one's present life (whether positive or negative) comes close to verbalising the influence of 'memory'. Even if 'memory' as a motivation is present but less obvious among those who hold a belief in an afterlife - since it is more clearly expressed by those denying such a belief but practising memorial rites - other manifestations of 'memory' are seen among people like Mrs. Kosaka who keeps diaries and looks at them (or photograph albums in some families) at New Year or on other occasions throughout the year.

'Purity and pollution' concepts are manifested in attitudes to rites which are said to make a 'distinction' of some sort - whether in the life-cycle or, as in Mrs. Kosaka's attitude to the putting on of her hara-obi, even in one's own consciousness and perception of the world. Ultimately all such 'distinctions' are those imposed by one's social ordering of the world and the demarcation of a continuous process of time into distinctive periodisations and categories. Often religious symbolism is invoked to mitigate the 'danger' at such boundaries. Important boundaries in the life-cycle are markers of, or marked by (18) the theme of 'age'. Prominent among these are miyamairi, 7-5-3 and yakudoshi rites, to which private household age-marking rites such as those for conferring a name on a child or for celebrating the beginning of weaning might be added (cf. Beardsley, Hall and Ward 1959:291-2). These are less marked as 'religious' rites nowadays even if naming a child often does involve the use of seimeihandan or visits to shrines to consult a priest about suitable names: the most 'religious' 'naming ceremony' mentioned by any informant was the process of choosing names for their chōnan (who is now in his twenties) as described by Mrs. Yoshida.

Therefore a mixture of underlying 'motivations' appear in a variety of individual circumstances and contexts to

---

(18) The mutual interaction envisaged here is similar to the distinction made by Geertz (1973:93-5) between 'models of' and 'models for' reality.

form the 'kaleidoscope' of religious behaviour at the 'surface level' observable in individuals. Some people appear 'more religious' and other less so; those from rural areas often seem to hold more 'active' beliefs and to practise a greater number of religious acts than those from urban areas, but there is an overall tendency for people to practise 'more' religious acts as they grow older and assume responsibility for ancestral rites, or are brought into circumstances such as illness in which religious responses are often evoked. However, all these social and individual patterns may be compared to waves which shift and turn the sand on the seashore but hardly affect at all the mineralogical composition of the sand itself.

PART V

CONCLUSIONS

CHAPTER 14

CONCLUSIONS

A Minor Themes

1. Pseudo-scientific beliefs

In scattered places throughout the previous chapters reference has been made to 'pseudo-scientific' beliefs which provide a justification for people's actions. It remains now to bring these together and to put them in a wider context. The kinds of phenomena which have been reported to the anthropologist as 'scientific' by people in Ueno are:

(a)	Yakudoshis	("It has been shown scientifically that one's body changes at these ages").
(b)	Fireballs	("These have been shown by Science to be from the potassium emitted by the bones of dead people").
(c)	'Animal Years'	("They are connected with the sunspot cycle and in that way influence the character of those born in each year").
(d)	Blood Groups	- a 'scientific' veneer to a kind of character divination.
(e)	One's name	("It has been ascertained that criminals are often (literally!) given a bad name").

In addition to these, mention should also be made of the extent to which people profess a belief in the existence of U.F.O.s: in the questionnaire, 181 people (27.1%) wrote 'Yes', 290 (43.5%) 'No', 181 (27.1%) 'Don't know' and 15 others left the question blank. Because U.F.O.s appear to be relatively 'scientific', although it still requires 'faith' to profess such a belief, the concept seems to appeal more to men: 33.3% of the men versus 19% of the women professed such a belief, although the percentages of 'No' responses are almost the same, with more women preferring the 'Don't know' response. (1)

---

(1) It might be pointed out in this context that there is also a marginally higher proportion of men professing a belief in fireballs but the difference is too small (35.3% vs. 31.7%) to be statistically significant.

Another 'pseudo-scientific' rationalisation for religious or 'superstitious' behaviour is cited by Dore (1958: 367-370) who mentions that one of his informants had read in the Reader's Digest that 'from something to do with the earth's magnetic field and the daily revolution of the earth, it is actually better for the circulation and for growth to sleep with your head pointing north' and quoted it in relation to the traditional prohibition against sleeping in this manner ('like a corpse', as Confucius said, referring to Chinese burial customs). Dore also notes (p. 369) that some 'rationalizers' defended rules about the Kimon and direction-lore as 'embodying rules of empirically demonstrable hygienic value'.

It appears from all these examples that 'belief' is reinforced by attributing to it some degree of 'scientific' 'proof', even if the actual 'scientific' value of the statement is very highly questionable. For example, several people said they had seen a 'fireball' (hi no tama 火の玉) and described it as a red, orange, purple or 'blue-green' glow or 'star' which was seen for a short while and then disappeared. Although 34% of the questionnaire sample professed a belief in them, those questioned about it said they had "heard" that "other people" had seen them and only seven of the 100 people interviewed claimed to have seen one - six of these in childhood (at about the age of nine or ten, or "when in primary school"), and always at twilight or at night. However, only two of these had seen the fireball in a graveyard,(2) the place where one would expect to see them if the 'potassium' theory had any validity, and both of these informants (one male, the other female) said the experience was "very frightening" so they ran away.

---

(2) One of these said that it was "a place where people had died without a purification having been performed (o-harai sezu ni)", perhaps a place like the Nishiyama battleground, while the other specified that he saw the fireball in a graveyard "among the trees".

The other four, however, had seen the fireballs in other places - falling from the sky over the sea, on the roof of a house, outside the house where (he presumed) someone had died and in the sky above Kyoto. All these were seen in childhood. In adulthood the man who had seen it in a graveyard says that although he has seen one he "does not believe in fireballs" while the woman who saw something falling from the sky over the sea and then disappearing speculated whether it might have been a meteorite. The only woman who claimed to have seen one as an adult is a woman of 51 who before marriage had worked for Nissei and one evening just after 7.00 p.m. she was in front of the factory shop with two of her friends when they saw "something red about one metre in diameter jumping about very slowly above the area of the personnel office (at least 600 yards away) which then drifted off towards the south and disappeared". This woman interpreted this as a fireball and wondered if it meant that someone had died, but one wonders if her choosing this interpretation was influenced at all by her being of a rural background, educated to high school level but not beyond, and from a relatively 'religious' family, as indicated by her father deciding to become a Shinto priest after his retirement.

It is apparent, therefore, that what is popularly thought to be a 'scientifically proven' phenomenon explicable by potassium being emitted from the bones of a dead person is reported mainly by children and usually in places other than graveyards. They are nevertheless often interpreted as the spirits or ghosts of dead people, since the word '<u>tama</u>' ('ball') can also mean 'spirit' or 'ghost' (Blacker 1975: 43ff). This interpretation is given by many of those who claim to 'believe' in fireballs without having ever seen one, as well as some of those who do claim to have seen one. Most people, however, mention the 'scientific' explanation regarding potassium, but only one person

mentioned the obvious fact that such an explanation is unlikely to hold nowadays because cremation rather than burial is the norm (and is prescribed by law, at least for urban areas).

The appeal of such 'scientific' or pseudo-scientific explanations, however, is largely their provision of what appears to be a 'rational' basis for one's belief. The relationship between 'rationality' and 'religion' has often been discussed, one of the classic studies being that of witchcraft among the Azande by Evans-Pritchard (1937), who argues that the 'commonsense' explanation for phenomena is not precluded by the Azande but is, rather, not the level at which interpretation becomes meaningful in answering the questions "Why me?" or "Why him?" In these examples from Japan, however, the appeal to 'scientific' explanation is not like the Azande case in which the 'ordinary' explanation is obvious, but rather can become an attempt to justify a belief in terms acceptable to 'scientific' modern man. However, such explanations can be utilised in two opposite ways depending on the preconceived decisions of different people: either the phenomenon is 'explained away' as 'nothing more' than (for example) burning potassium, or otherwise the 'scientific' explanation is used to justify an existing belief as being 'rational' and 'scientific' even though it still involves a 'leap of faith' to jump from this to the explanation that fireballs are also spirits or ghosts. Among those interviewed both tendencies seem to have been manifested, and certainly several who claim to believe that fireballs exist (usually those who do not claim to have seen one) also asserted that they are ghosts or spirits, often mentioning the potassium theory at the same time as a rationalisation for their belief.

However, the question of whether or not fireballs 'exist' remains an 'intellectual' one as long as such a belief involves no ritual action. It is different in the case of <u>yakudoshis</u>, however, in

which the 'pseudo-scientific' explanation about bodily changes does involve also some expected ritual action to avert the anticipated misfortunes of that year. As shown in Chapter 4, the cases adduced of misfortunes occurring in a yakudoshi are often those such as the death of a relative which does not fit with the 'bodily change' theory, but nevertheless the 'scientific' argument is generally put forward as a rationalisation for existing beliefs or practices. It can also serve as a predisposing influence on action, to the extent that a person who accepts the idea that one's body changes during a yakudoshi, but is not required to perform any rituals associated with that idea until he or she reaches his or her yakudoshi, is probably more inclined to perform such ritual actions at that time than are those without such predisposing beliefs, but further 'longitudinal' research on people before, during and after their yakudoshis will be necessary to test this hypothesis.

Beliefs such as those involving fireballs or yakudoshis appear to have a long history in Japan (Blacker 1975: 43,364; Norbeck 1955: 105-7) and have probably acquired a 'pseudo-scientific' explanation in relatively recent history. Rather than such beliefs disappearing in the face of 'rational' or 'scientific' ways of thinking they have instead been re-interpreted to 'fit' with a contemporary mode of expression.(3) Even so, several of the more scientifically-trained individuals in Sakurano and Aoyama, such as Dr. Satō the pharmacologist, are sceptical of the pseudo-scientific rationalisations for beliefs such as yakudoshis and fireballs. Such scientists, however, are specialists

---

(3) An extension of the idea that one's body changes and is more susceptible to illness during a yakudoshi may be the emphasis put upon the idea of 'biorhythms' in some Japanese factories, as mentioned by Kamata (1982: 121, 124). I withhold judgement about the 'scientific' or 'pseudo-scientific' status of such ideas.

whose 'wisdom' is veiled to those around them by the technical language of scientific jargon, mathematical equations, Latin names and abstruse concepts as well as by the ritual accoutrements of white coats, special titles and mysterious apparatus. They become, in effect, the 'priests' of a 'scientific' 'Great Tradition' - to use Redfield's (1956) concept - who alone are the 'literate' among a mass of 'scientific illiterates'. In Redfield's original distinction between the 'Great' and 'Little' Traditions, the 'Great Tradition' of the urban literati was contrasted with the 'Little Traditions' of folk beliefs and syncretism among the rural peasantry, often illiterates in areas such as Latin America. If the concept is applied to Japan, however, it is extremely difficult to distinguish the boundaries of such 'Traditions' at the level of practice because they do not seem to correspond in any clear way to either urban/rural or Buddhist/Shinto distinctions, since practices such as the observance of yakudoshi beliefs, possession of safety charms, ancestral rites and so on are common to all. Instead, there seems to be an emerging 'Great Tradition' based on 'Science', with its priesthood of 'scientific literati', while all around, in urban as well as rural areas, the 'Little Tradition' of 'traditional' beliefs begins to seek some rationalisation, validation or corroboration for its beliefs in the claim that they belong to the 'Great Tradition' - because they are 'scientific'.

However, even if some traditional beliefs are reinterpreted to appear more acceptable to a public which holds 'science' in high esteem, there is still an awareness of the limitations of 'science', and, by implication, of the possibility of a realm of reality not amenable to 'scientific' investigation. This is indicated by the statistic that over 70% of the questionnaire respondents think that science is not able to explain eventually 'all mysterious things', and recognise that beyond Science is 'something greater' - because "there are many things man can not do, and many things he does not know" (cf. Chapter 10).

2. Secularisation

Throughout the previous chapters the term 'non-religious' has generally been preferred to 'secular' because the latter implies that there has been some transition from the 'religious' to the 'secular' (Tamaru 1979: 91). Rather, such a process has not been taken for granted and in a Japanese context it is extremely difficult to demonstrate conclusively. Partly this is because statistics on the numbers of Butsudans, for example, may reflect the domestic cycle of the households (whether or not there has been a death in that 'lineage') rather than 'religiosity'. Traditionally, older people (those over 60) become responsible for religious rites during their retirement (Norbeck 1953: 381-2) and if older people today appear to be more 'religious' it may be simply an expression of such traditional patterns rather than any indication of a more 'secular' outlook among younger generations. They in their turn are likely to become responsible for Butsudan rites in the future and in that way to become more 'religious' as they grow older. In old age they may also visit temples in order to meet with others of their age, or even to pray for a 'quick death' rather than a slow and lingering one which would be a burden upon those who would have to look after them (Wöss 1982: 2, 7-10). (4)

Other indices of 'secularisation' are also problematic, because many types of religious activities do not depend upon membership of a group (such as a 'church') for which membership figures can be compared over time. The nearest equivalent of this is participation in Shinto shrine festivals (matsuri), and there does seem to be evidence that enthusiasm for these has waned because younger men (who would carry the

---

(4) Wöss (1982: 10) also notes that the suicide rate is very high among older people.

mikoshi in traditional festivals) have often migrated to the cities, newer urban immigrants are less interested in taking part in such matsuri and leave the organisation up to older-established households, and those who do carry the mikoshi increasingly expect to be paid for their services (cf. Itō 1983b: 258; Sonoda 1975: 112-3; and the account of the Ueno and Nishiyama matsuris in Chapter 11). On the other hand, there has been a dramatic increase in the membership of many 'new religions' with a relatively cohesive or 'church-like' structure, particularly since the Second World War. By the early 1960s, the 171 'new religions' registered with the Ministry of Education had a total claimed membership of over 18 million (Thomsen 1963: 17); the five new religions studied by McFarland in 1967 reported membership figures totalling over 15 million. The largest of these, the Sōka Gakkai, claimed to have over 10 million members at the time of McFarland's study (1967: 5), but in the early 1970s claimed over 16 million (Agency for Cultural Affairs 1972: 208). Such trends indicate change - a decline in the active participation of local people in many Shinto matsuris, which have become tourist attractions for many of their spectators in areas where the matsuris have survived, but an increase in membership of religious groups based less on residence and more on professed beliefs and adherence to certain practices. In many ways the Shinto matsuri is an expression of local (village) identity which has been replaced in many urban areas by an 'associational identity' based on one's company or on voluntary associations of which the 'new religions' constitute a 'religious' sub-type. Their organisational features approximate more to the Christian 'Nonconformist' churches than to Anglican or Catholic parishes, which, like Shinto shrines, have more of a territorial base. Apparently decline in one area is matched by increase in another, but the process of change can not be

labelled 'secularisation' in an overall perspective.

The process or direction of change may have been stimulated to some extent by the defeat in the war and the Emperor's renunciation of his claims to divinity. Tsurumi (1970, ch. 5) has described some of the effects of this upon many Japanese people, the popular authoress Ayako Miura (5) has described it more poignantly in her novel 'The Wind is Howling' (1970), and others have commented upon it (eg. Stoetzel 1955, ch. 4; McFarland 1967: 75-7). At Nissei the door of the large outdoor cabinet-like concrete structure which used to be opened daily for corporate prayers to the Emperor now remains shut, but the Emperor's portrait is said to be still inside. Just as Nissei discontinued its manufacture of some military equipment (torpedo gyroscopes etc.) and its worship of the Emperor and concentrated on 'other lines', both commercially and religiously, so the nation as a whole has 'changed tack' - but the change does not necessarily imply retrogression, in either the commercial or the religious spheres. Some Shinto institutions have perhaps declined, especially when no longer supported by the State (cf. Ono 1962: 16-18), some of the larger ones like the Ueno jingū have attracted worshippers on a city-wide scale because of its parking facilities, and other features such as purification rites for cars and the selling of red reflector plates stamped with the shrine's name as kinds of mamori charms, while others like the Iwadani shrine have specialised in charms for yakudoshis or other such crises in life. On the other hand, many Buddhist 'new religions', especially the Sōka Gakkai, have increased considerably in size, which, when compared to the decline in some local Shinto matsuris, may indicate that overall there may be a shift from some Shinto to some Buddhist forms of religious activity.

---

(5) Miura is the surname, which in Japanese is normally put first.

Such a change may have been facilitated to some extent by the post-war disillusionment with Shinto, but the principal factor was probably the extensive rural-urban migration which loosened 'territoriality' as a basis for religious identity and promoted 'association' instead, especially in urban areas (cf. Ikado 1968: 103-6; Morioka 1975: 47-58, 63-71).

Two inter-linked aspects of religious change or contrast are often subsumed under the label of 'secularisation'. These are the rural/urban and past/present contrasts, but the two are linked by the continuing process of rural-urban migration and the expansion of cities to incorporate former rural areas. There is substantially relatively little comparative data for assessing the degree to which 'secularisation' may have taken place historically, although there are a large number of rural ethnographies available to provide urban/rural comparisons. However, these tend to provide data on aspects such as the Butsudan or Kamidana cults, local festivals, sect membership and types of pilgrimage but relatively little quantitative or even qualitative information on aspects such as fortune-telling, yakudoshi observances, frequency of household rites (Smith 1974 being an important exception) or the use of charms and talismans, still less attitudes towards these. Therefore it is extremely difficult to construct a comprehensive or universally applicable index of 'religiosity', because the actual combination of these elements differs from person to person, even more so the attitudes and beliefs associated with them. There is, no doubt, some linkage between these elements, so that, for example, a person who visits a Shinto shrine relatively often is probably more likely than not to purchase charms or mikujis from that shrine, but the inter-relationships between aspects of 'religiosity' as diverse as Butsudan rites,

yakudoshi observances and the use of seimeihandan are far less obvious. Since any individual might rank high on one scale of religious practices but low on another, and the relative weightings of such scales are extremely problematic, any assessment of 'religiosity' has to remain at the moment relatively subjective. When individuals were classified as 'relatively non-religious' in Chapter 13, this was by the anthropologist's own subjective assessment, based largely upon criteria such as the presence or absence of household cults and, if present, the frequency of rites, the frequency of participation in some kind of formal religious cult (such as shrine or temple visits, membership of an organised religion etc.) and, to some extent, the range and variety of religious beliefs and practices. However, this remains a relatively subjective judgement and these individuals may change over time, in terms of their religious involvements, if or when they become responsible for ancestral rites or join a religious group of some kind.

Bearing in mind all these qualifications, it is my opinion that those who are first-generation migrants from rural areas do appear to be in some way 'more religious' than those from urban backgrounds, with the possible exception of those from the city of Kyoto which is generally reputed to be a centre of traditional values, upholds traditional industries such as silk production - which developed when the city was the capital of Japan (until 1868) - and contains over 3,000 temples or shrines, several the headquarters of large Buddhist sects. It is extremely difficult to substantiate quantitatively my feeling that those from rural areas are 'more religious', partly because those from the older areas of Ueno are also 'very religious' when compared with the 'salarymen' who have moved into the area from elsewhere in the country. It seems, however, as if the degree of 'religiosity' does have something to do with the distance from one's

'roots'. Those from rural areas who appear to be 'more religious' than average are mainly those from villages around Ueno whose ancestral graves, ujigami shrines and many relatives can be reached within an hour or so by car from the Sakurano/Aoyama area. It is these who participate in rites at such locations more frequently than those who have further to travel, and who are also influenced to a greater extent by the attitudes and beliefs of their rural relatives with whom they have more contact than those from further away. It may be that the comments by Spae (1971) quoted at the end of Chapter 3 regarding the manner in which the home village becomes in a sense personified to produce a plethora of local Shinto kami have some connection with the fact that the symbols of family continuity - the graves, houses and the various living generations - are in that place too, fostering the idea that one's 'roots' lie there and nurtured by the 'motivation' of 'memory'.

In the same way, those from the older parts of Ueno, urban inhabitants born and brought up in an urban environment, also seem 'more religious' than those from other cities. The 'possible exception' of Kyoto may also be included in the 'relatively local' area, since Kyoto lies not too far away over the mountains and can be reached from Nishiyama within an hour by car. Those urbanites whose parents lived in the same general area also have roots in the area, and the fact that it is urban instead of rural seems to have only a little differentiating influence upon behaviour, because the ancestral graves, ujigami shrines and relatives living in the area still exert an influence similar to that exerted on the recent migrants from villages around Ueno. In a subjective assessment of 'religiosity' these two groups merge into one another. The only features which still distinguish those from rural areas are particular customs in a few households, such as the performance at Setsubun of the main shrine visit of the year, instead of at

New Year (the Ikeda family), the setting out of offerings for the 'hungry ghosts' at Segaki (Mrs. Yoshida) or the presentation of offerings at the Girls' Festival stand instead of at a Kamidana (Mrs. Takeda). Both Mrs. Yoshida and Mrs. Takeda are married to someone already related to them genealogically, but Mrs. Takeda does not know the exact genealogical connection. As Mrs. Yoshida is also the one who visits a Shinto shrine each year at Setsubun in the hope of catching a rice-cake "for good fortune", it is noticeable that the religious aspects of Setsubun are also stronger among those from rural backgrounds. (6)

Those from other urban areas, or even from more distant rural areas, by contrast, have less frequent visits to their home area, are relatively less involved with grave rites and have relatively less influence from other relatives regarding religious attitudes. For a while they appear to be relatively 'non-religious', but if in future they become responsible for a Butsudan or experience some serious illness or crisis which brings them to face up to their limitations and then to seek help from a 'spiritual' kind of power they may indeed become more 'religious'. Those at a younger stage in the life-cycle have less responsibilities for the ancestral cult and have often gone to other parts of the country (or abroad) on account of work or study so seem relatively less religious: many in the Nissei shataku fit into this categorisation. However, as they grow older, buy a house and become responsible for ancestral rites they begin to put down some roots in the area, even if they had come from elsewhere originally, and it is then that they may begin to take up some aspects of 'religious' behaviour,

---

(6) Mrs. Yoshida comes from the Akashi region to the west of Kōbe but the others come from near the Ueno area.

particularly ancestral rites if the husband is a chōnan or responsible for other reasons. Their children grow up in the area and when the parents die one of them continues the ancestral rites, or initiates them if the parent had not been responsible for any. Even if the child who takes on the responsibility has also moved to another city and no longer has roots in the place where the parent settled, the cycle still repeats itself. It seems as if those who remain near where they were brought up are likely to continue more religious practices than those who move away, but in the next generation even those who have moved away and have no responsibility for ancestral rites will usually have someone to perform ancestral rites on their behalf; the family does not remain 'non-religious' for more than a single generation, and with the smaller size of families those individuals who escape direct responsibility for ancestral rites by being younger sons of younger sons will become an increasingly smaller proportion of the total population, a process which in its effects is likely to add to the cumulative 'religiosity' of the nation, in terms of the number of households performing ancestral rites, which is the reverse to what would be expected from a theory of 'secularisation' producing a decline in 'religion'.

3. Local versus National frameworks

Before I realised that the diversity of religious practices and the paucity of comparative data make meaningful studies of the 'secularisation' process extremely difficult, the urban area of Sakurano and Aoyama was selected as a site for anthropological fieldwork. Owing to the absence of a formal local shrine (the Nishiyama shrine near the main gate of the factory not including these areas in its 'parish' as far as matsuri and other events are concerned), I thought that the two areas would display a relatively lower degree of 'religious' behaviour and display a relatively higher level of secularisation than older urban or

rural areas. As new housing estates they are also marked by the absence of Jizō idols and similar local religious foci. Therefore the two could be expected to display 'minima' in terms of religious behaviour as compared to other areas of Japan. The Sakurano shrines do exert some influence, it is true, but relatively few shataku residents go to pray there and the only formal rites are performed by the Nissei management with the rites conducted by the priest of the Nishiyama shrine (who himself is attached to a larger shrine across the river and is not 'incumbent' at the Nishiyama one). For such reasons it could be expected that other areas where a local shrine is more the focus of religious behaviour would perhaps display 'more religious' features than those described for Sakurano and Aoyama, especially considering the younger average age of the Sakurano residents who do not yet own their own homes.

However, although this assumption might be valid as far as participation in shrine matsuri is concerned, it is not valid for activities such as visiting shrines and praying there, and neither is it particularly valid for worship at Jizō idols. At least six people in the area regularly pray to Jizō when they take the children to school, visit relatives in the Ueno area or go on walks in the countryside, and it is likely that others do so who were not asked about this in their interviews. Therefore the 'diffusion factor' in religious activities needs to be taken into account.

A local study such as this can elucidate local influences upon religious behaviour such as the Jizō Bon and nōryōsai, the effects of different types of housing and stages in the life cycle upon the possession of Butsudans or Kamidanas and the effect of local events upon the religious activities in the Nissei factory. All these are specifically local variants or patterns in a national framework which has similar

institutions elsewhere even if the details differ. However, a local study of Sakurano and Aoyama needs to step out of the neighbourhood in order to study even grave rites, which are located in many different local areas for those in these two urban neighbourhoods, whereas rural ethnographies normally have the advantage of being able to study such rites locally. In an urban context the boundaries are even more diffuse when practices such as fortune-telling and shrine or temple visits are discussed. Some individuals go as far away as Kyoto or Nara for such activities but return home at night to Sakurano and Aoyama without their neighbours being aware that they have gone any further than a local department store. The private rather than public nature of most religious activities (such as household rites, fortune-telling and even visits to more distant shrines or temples where one is an 'anonymous tourist') makes analysis of local religious activities inadequate without an investigation into these private areas of religious behaviour, but often the anthropologist has to accept the actor's own account of experiences which are not amenable to direct observation during the short fieldwork period. This is especially so for consultation of mediums, Kokkuri-san or other types of divination in which the people had participated in the past but do so no longer, and had often done so in a different city. From a methodological viewpoint, one either focusses upon a specialist institution, group or individual and the relationships with a clientele drawn from many different areas and social classes, or one focusses upon a local area and examines the range of religious activities found within it. The former approach has been adopted by many who study Japanese 'new religions' - e.g. Davis (1980) or Dale (1975) - and also by Lock (1980) to study East Asian medicine, but such approaches give little indication of how common such practices may be among the public at large. The present study, however, focusses upon a local area and the range of

behaviour within it but needs also to include activities which take place outside the rather artificially demarcated boundaries of the fieldwork area. To use the analogy developed by Umesao and others (1972), the former kind of study focusses upon the 'Maker', by sitting in a specialist shop and finding out who the customers are, whereas the present study focusses upon the 'User', by doing 'market research' among the customers to find out which specialist they go to and why. Both methods complement each other, and need to be taken in conjunction to understand in a more holistic manner the actual 'state of the market', but the scope of such a study is too vast for one individual to undertake in a short period of fieldwork. The present study of the 'customers' therefore serves as a contribution to this approach, one which has been relatively neglected for urban Japan ever since Dore's (1958) classic study.

There still remains the question, however, whether this area is 'representative'. In a sense, no area is 'representative', and in another sense every area is, because each area combines some mixture of local peculiarities and common, overall traits which it is very difficult to distinguish in a local study unless one has sufficient comparative material from other areas within the same culture. When Evans-Pritchard, for example, writes of 'the Nuer' (1940 or 1956), he is basing his ethnographic statements on experiences in one small area, not the whole tribe, under the assumption that the whole is to some extent represented by the part, the macrocosm by the microcosm. A similar assumption needs to be made by most anthropologists studying tribal societies, but the validity of the methodological or theoretical assumption seems more stretched when one considers a nation state the size of Japan with a population of about 117 million people. (7) It is obvious that it is not a fully homogenous

---

(7) Population in 1980, cited by Westney and Coleman (1983: 222).

society, that there are local, regional and class differences, some of which have been pointed out by scholars such as Nagashima and Tomoeda (1984) or Nakamaki (1983: 73-5). To some extent this variation is reflected in the differences among individuals in one part of Ueno, the individual neighbourhood variation perhaps being a kind of 'microcosm' of local/national differences. It is one of the advantages of anthropological studies of many local areas that such local or regional differences can be elucidated. Another equally important advantage is that general similarities can be more easily discerned. Just as Benedict (1946: 16-17) found that after a while the law of diminishing returns sets in with increasing numbers of informants because each one repeats virtually the same as the previous one, so in this study of attitudes to religious activities it was found that the same kinds of attitudes were held by people from many different parts of the country who apparently had not discussed these matters with one another at all but held a common viewpoint. Discussions with Japanese living in places as far apart as Osaka and Sapporo, not included in the data presented from Ueno, also revealed essentially the same attitudes - consulting seimeihandan 'to be on the safe side' rather than out of any definite convictions or belief, performing ancestral rites out of a feeling that one should respect the person's 'memory' rather than believing in an afterlife, and so on. It does appear as if certain values, attitudes and 'motivations' are distributed much more widely than their local forms, as manifested in behaviour such as ancestral rites or possession of safety charms. Even those who do not (yet) practise such particular manifestations of these 'motivations' may display very similar 'motivations' in behaviour such as writing diaries, keeping a child's umbilical cord, reciting a 'safety chant' at work or participating in company prayers for safety, all of which are other manifestations of the same underlying 'motivations'.

Sometimes the 'motivations' are independent of the beliefs which would be assumed to be implied by the resultant actions - such as is seen in those who deny any belief in an afterlife or in the efficacy of prayers for safety at the factory - but the behaviour still reflects certain underlying, generally accepted, cultural values which seem to be independent of local forms or manifestations of them.

In this perhaps one is approaching the concept of 'culture'. At a number of points it has been seen how the social structure of a society can act upon the basic 'motivations' to channel them into particular directions: this was the main point of Part III, illustrated by various examples such as birth order, sexual roles and the use of leisure time. Such patterns may change relatively quickly - families become smaller so more men are chōnans, more women go out to work, alternative forms of leisure become available, and so on - but it is assumed that some of the underlying 'motivations' such as 'memory' and 'safety' will persist. Certainly some of their manifestations (ancestral rites, the writing of diaries, the use of safety charms and so on) can be traced back many centuries, and it is highly likely that such underlying 'motivations' will change far more slowly than 'social structures' in the economic or political field. At this 'deeper' level of 'motivations' one is touching upon that which seems to be indicative of 'culture' - the shared values and motivations which give some distinctive continuity to a people or nation even when rapid social change is taking place in many other areas. Perhaps these 'motivations' provide some kind of an 'identity' for cultures to distinguish them in some way from each other, although often aspects of social structure, language or symbolism serve this purpose instead.

The idea of 'constellations', a term first introduced in the

Introduction, may be helpful in this respect. Specialist astronomers can distinguish the constituent stars according to their size, mass, distance from each other, direction of movement and other features not readily observable by the ordinary person who looks at the night sky and notices what seem to be patterns or groupings of stars. For that person, it is the arrangement of the stars in their relationship to each other which becomes a distinguishing feature of each constellation, and those constellations are given distinctive names. In studying 'motivations' we are not yet at the stage where we can analyse the details of the particular stars, but as far as we are concerned they are almost the same, though some are brighter than others, so the important factor becomes their arrangement and configuration. So in the same way each of the 'motivations' distinguished in Part II seems identical, or very similar, to 'motivations' found in other cultures outside Japan. Concerns with safety, purity and pollution, and so on are widespread and might be found in all cultures, just as stars are found in all constellations. What is most distinctive to us at the moment, however, is their mutual arrangement. The kind of arrangement described in the present work describes the 'constellation' of 'motivations' that we label as 'Japan'. Other 'constellations' may be labelled as 'Korea', 'England', 'Nuer' or whatever, each with a distinctive pattern or arrangement of elements which in isolation may seem identical to elements found in constellations elsewhere. The whole is greater than the sum of its parts.

B Major Themes

4. The nature of 'belief'

In the Introduction a distinction was made between 'active' and 'passive' belief, the former being that which is held to have a meaningful relationship to one's personal life whereas the latter is more of a verbal affirmation of doctrine. It might be said that the former is from the 'heart' and the latter from the 'head'. Essentially the distinction is the same as that made by Southwold (1983: 148-154) between 'believe in' and 'believe that', or by Evans-Pritchard (1956: 9) between 'faith' and 'belief'. The terms 'active' and 'passive' have been preferred in the present context because one tends to think of 'faith in' a person but to 'believe that' a doctrine is true, whereas if the two types of 'belief' are to be marked as different but with reference to a doctrine (such as that of an afterlife) it imposes a strain upon normal English usage.

However, to fully distinguish these two aspects of belief in practice is difficult, but if it is possible then it leads to deeper understanding of religious experience. To some extent 'active' belief is likely to be indicated by a greater frequency in religious practice, but owing to a variety of 'mitigating circumstances' (such as those mentioned in the Introduction) this may not always be a valid test. It is particularly difficult in cases where there is no practice which necessarily implies that belief, such as, for example, a belief that fireballs or U.F.O.s exist. It seems a little odd in English to speak of 'faith' or 'belief in' fireballs rather than 'belief that' they exist, since they are not phenomena in which one puts one's trust, as in God. However, there is surely a difference between the woman who said that she believes fireballs exist because she has heard some accounts of them (probably at second- or third-hand), and who thinks

the phenomenon is probably something to do with potassium but is not sure if they are spirits or not, and the woman who says she saw a fireball one evening over the personnel office of the Nissei factory and who therefore wondered if someone had died in the plant. Both make a 'belief avowal' (cf. Southwold 1983: 153-156), both affirm a 'belief that' fireballs exist, neither display any 'belief in' fireballs in the sense of prayers to or 'trust in' them (as if to deities), but one has a qualitatively different kind of 'belief' based upon a personal experience which has somehow made the concept of fireballs more 'meaningful' to her than the other woman. It is this kind of difference which is marked by the active/passive distinction in religious belief.

In practice it appears as if the majority of people have a more 'passive' than 'active' belief in most phenomena, but it is very difficult to measure the qualitative difference between 'active' and 'passive' belief in many cases. To a large extent it does seem to correspond to the Japanese distinction between 'to hold a religion' (shūkyō o mamoru 宗教を守る) and 'to believe (in) a religion' (shūkyō o shinjiru 宗教を信じる). Probably this distinction lies behind the apparently rather strange comment of the man who said he had seen a fireball in a graveyard when he was 10 years old but does "not believe in" them. In this sense there are many people who do not 'believe in' a religion but who 'hold' a religion by participating in the expected rites and duties such as the ancestral cult. If claimed allegiance to a religion is taken as an index of some kind of 'active' belief, then it accounts for less than 30% of the sample, but if practice is taken as an index of some sort of 'passive' belief, then virtually all the other 70% are included. Even the two individuals whose case histories were given in Chapter 3 as examples of people with some antagonism to 'religion' on account of their personal experiences do still

participate occasionally in some religious practices such as New Year shrine visits even if they have become cynical towards Buddhist ancestral rites. Others are like the two 'relatively non-religious' people who were described in Chapter 13, and many more seem to resemble to some extent the other six individuals whose profiles were given in that chapter. There was no one at all in either Sakurano or Aoyama included in the questionnaire sample who had not at some time participated in some kind of a religious activity, and almost always they had done a New Year shrine visit or a grave visit in the year the questionnaire was administered. No one could be counted as 'completely non-religious', even if several came close to that category, but most of the 70% who claim to have 'no religion' hold a 'passive belief' of some sort, at least to the extent of conforming to some sort of social expectations regarding participation in religious rites. If those in category 'F' of Figure 1.1 are seen as the extreme of 'disbelief' and who refuse to participate in practices even when expected to do so, then no such individuals were located in the sample. Considerably more people fall into category 'A' of Figure 1.1 ('believers' who are consistent between 'belief' and 'practice') but the majority fall in categories B to E and generally seem to have more of a 'passive' than 'active' belief. This is of course a very generalised overview, taking into account all aspects of 'practice' and 'belief', from New Year shrine visits to Butsudan worship, but many individuals may fall into category D on one count, category E on another and category F on still another, or some other permutation of categories. Perhaps by attempting to classify each person on each count and producing an aggregate mean or median among the cluster of categories one can see that some people are nearer the 'religious' and others nearer the 'non-religious' end of a spectrum, but such a task becomes almost meaningless when such people are viewed

in terms of their stages in the life-cycle process and the overall tendency to move towards the 'religious' end as one becomes older and assumes more responsibilities for the ancestral cult. Japanese religiosity is not static but dynamic and is linked closely to the life-cycle.

5. Religion, Society and the Individual

(a) The large group

The influence of 'social pressure' on religious behaviour requires further analysis. Benedict's (1946) description of Japanese society as one in which one has to live up to a host of obligations and social responsibilities still describes many facets of Japanese life quite accurately, it seems, even if many of the types of obligations and responsibilities have altered over time. 'Social pressure' comes from the feeling that one should live up to the responsibilities and obligations expected of one, and also from the shame of admitting to failure in these, combined with a feeling that society at large is sitting in judgement upon one's conduct (cf. Benedict 1946, chapter 8; Lebra 1976, chapters 5 to 7). What is most important is the outward performance of practice, at least in the religious field, irrespective of beliefs in the heart. As has been seen in many contexts already (grave rites, company rituals and so on), the practice remains constant but the beliefs and attitudes associated with it may differ considerably from person to person.

This 'social pressure' is much greater for collective religious expressions such as company rites, hōjis and some grave visits, and is less discernible for individual forms of religious expression. In terms of public, collective rituals a Durkheimian analysis may be useful because very often the only motivation for practice is 'social' rather

than 'religious', and this is openly expressed by the actors themselves with reference to some of the festivals and other 'religious' activities seen in the context of 'leisure', as described in Chapter 11. However, where the social functions are more latent than manifest, as in some of the company rites described in Chapter 12, reference to latent social functions of religion might not serve as a comprehensive 'explanation' for the religious behaviour any more than an analysis of the latent social functions of a meal with guests provides a comprehensive 'explanation' for the act of eating. It is of course possible to find such latent social functions if one were to look hard enough for them, but their significance depends upon one's preconceived theoretical framework and upon a weighting of the different elements in a manner open to a high degree of subjectivity. For this reason, a detailed account has been given of Nissei company rites in Chapter 12 so that the evidence can be assessed by others. For some of the rites there are some concomitant social aspects such as a meal at company expense or a party in a prestigious hotel (on the night before the anniversary of the founding of the firm), but for others the latent social functions are far less obvious. The social aspects of the Hatsu-uma and o-hitaki rites seem to be almost negligible for many of the participants, while for the Segaki ritual and the monthly grave rites the only participants are Ōishi-san and a Buddhist priest, who have no other social contacts with each other for any other purposes. Therefore it is very difficult to find many 'positive' social benefits in many of these rites - only the 'negative' one that if one does not participate one feels embarrassed or conspicuous. With only 'negative' social pressures for conformity and with few, if any, clear 'positive' social benefits it is extremely difficult to see latent social functions in some of these rites.

Moreover, the actors themselves often appear bored during many

of the rituals, by the way they often look around, often a little furtively, while the rite is in progress, and some like Mr. Ōkura think that many of the rites are a waste of time, even if only a few say so openly. They participate out of a sense of duty or responsibility but seem to find very little reason to do so otherwise.

Secondly, it is very hard to find any social benefit in the rites for those on whose behalf they are supposed to be enacted - the employees in the firm who normally do not even know about the existence of the rites. Thirdly, the fact that the senior participants themselves express no belief in the overt functions of the rite does not mean that they believe the rite has useful covert social functions. Instead, they participate only out of a sense of duty and seem to wish they had fewer such religious duties to attend so that they can have more time for their main work.

It therefore appears that there are very few latent social functions in the rites, relatively few manifest ones, and that the obvious level of interpretation for the rites is not the 'social' but the 'religious' level. At this level the rites have a clear function: to pray for safety and prosperity within the firm. Even if the prayers do not actually 'work' it does not mean that one has to search for 'social' functions in order to explain the rites: they have a clear religious purpose which, for some at least, provides a reason for not discontinuing the rites - in case some disaster should befall the firm.

(b) <u>The small group</u>

The smaller group level of religious activity involves household rites at the Kamidana, Butsudan or graves. Plath (1964) has referred to Japanese household rites as 'where the family of God is the family' and sees the household as the crucial reference group for most religious

behaviour. Certainly the family does exert considerable social pressure on individuals to attend and participate at memorial services and some other kinds of rites, but such pressures are vocalised more in the case of Christians and others who are torn between the pressures of expected family obligations and the demands of individual conscience or personal faith. However, the hōji rites and some more frequent grave rites are not the most typical forms of household cult, but rather daily or monthly rites are the kind which occur much more frequently. For these there appears to be relatively less social pressure because at the hōji more distant relatives may come and one needs to put in an appearance whereas the demands of work or studies often provide sufficient justification for non-participation in 'normal' household rites. What happens in these cases is that one person often 'represents' the household before the kami or hotoke. Dore (1958: 330) notes how in strictly traditional families it was the duty of one person (not the whole household) to pray to each kami in turn which is worshipped in the home, and mentions that the task of worshipping such Shinto deities is assigned to one of the under-priests at the head temple of the Hossō sect of Buddhism in Nara. One person represents the collectivity before the gods, whether in Shinto or in Buddhist rites. Exactly the same principle of representatives is found in the traditional kō groups whose representatives brought back mamori for the various members as miyage, a practice still common in a different form today whereby mamori are often bought on behalf of another who does not visit a shrine or temple in person, but the modern practice does not involve a formal kō group. It is still perhaps a miyage in exchange for a senbetsu, but often a neighbour will bring back a charm for another as a gift after going to a local festival, for example, in which no senbetsu or equivalent has been given. Some of the clearest cases of such 'representative' roles are seen in the company rites at Nissei. The

buchōs, union leaders, jichikai chairmen, or Ōishi-san by himself all act on behalf of their group and represent the collectivity before the deity. At the monthly grave rite Ōishi-san represents the whole factory and its 4,000 employees as the only one who actually attends the rite. He does the same for the Segaki rite, but for the Fudō pilgrimage about a dozen men represent three factories and a union, and for the Yama no kami reisai about thirty men represent the factory and each of the surrounding residential wards, while most of those represented know nothing at all about the existence of the rite. Such practices involving representatives acting on behalf of others are reminiscent of the role of a priest who represents his people before God and represents God to the people, and reminds one of the meaning of the word 'vicar' - the one who acts vicariously on behalf of the people. In Japan, however, these representatives can not be said to represent anything like a 'church' in a Durkheimian sense. Durkheim based his argument on the idea that religious acts are collective and involve a 'church' (1918: 47), in the sense of a 'moral community' (of believers and/or participants), but if there is no 'church' and the 'vicars' perform rites without any congregation even knowing about the rites, let alone being in attendance at them, it involves a great stretch of the imagination to apply a Durkheimian analysis to the rites. These Japanese representatives represent the people before the deity but they do not represent the deity before the people. They are 'priests' but not 'prophets' who speak the words of the deity to the people - and, for the most part, neither are the established priesthood, whether Shinto or Buddhist (cf. Dore 1958: 340-345, 349-350). The rites are performed, the people are represented before the deity, but there is no 'church' in Durkheim's sense of the word, and therefore his theory can not apply to such organizational forms of religion.

To some extent the family unit does approximate more to a kind of 'church' than the wider social units, but it still remains true that for the majority of rites the family is represented by only one person. Therefore the same argument still applies and there is no 'church'. Durkheim's analysis can not be applied to such cases.

(c) The Individual

A common objection to Durkheim's theory of religion is that it does not account for individual religious behaviour (e.g. Hick 1963, 1973: 33-4; Goldenweiser 1975: 212, 226). There are many examples in Japan which illustrate this proposition. Some of them were not investigated thoroughly during the research but were mentioned during some of the final, relatively less structured interviews, these being the worship of natural features such as the moon or mountains. Many aspects of Jizō worship are also individual. Takeuchi-san says that she prays to the Jizō which she passes frequently and compares it to the greetings she gives to ordinary people except that those to Jizō are more formal. If in a hurry she just bows her head without the verbal greetings. She has never thought "why" she should pray to Jizō: it would be "rude" not to do so and perhaps something bad would then happen to her, she says. Her attitude to the moon is similar to that expressed towards Jizō but "the moon is beautiful, so I just pray and put my hands together in worship". Kosaka-san's attitude is very similar, when she prays to the moon or the sun or to an impressive mountain: she says that she simply puts her hands together and bows to them, without words but with feelings of "gratitude" and of "the greatness of Nature" when she is touched by the beauty of creation. Perhaps these feelings relate also to the more general feeling among many women that there "has to be something (or someone) greater than man", a conclusion about a 'Being greater than man and nature' sometimes reached through an ontological or even

intuitive process (cf. Chapter 10).

These aspects of religious experience are evoked by seeing the full moon or a beautiful sunset and seem to be largely individual expressions of religious emotion generated spontaneously through the experience and perception of beauty. They are not collective, nor are they organised. They are personal and spontaneous responses to religious emotions which in the case of Mrs. Kosaka is directed to "a power in nature but above man or nature which may be God but I don't distinguish exactly what it is". It is a response to an 'Other' beyond herself evoked by the beauty of creation and leading her to recognise what might be a Creator, but she is unable to verbalise her feelings in this regard. It is an intuitive and emotional response to that which is beyond her and which is not amenable to categorisation in prosaic terms. If it is what Otto calls 'the Holy' (1928: 116-7) it begins to lose its poetic and emotive quality simply by being pinned down and categorised in human words.

Other kinds of individual religious expressions or actions are found in abundance. The very fact that most household rites are performed by a representative on behalf of the group makes them individual, and often the other family members do not know if the grandmother or mother has done the rites on any particular day or not because they are involved with other activities or have already left for school or work - as is clear in the case of the woman who prays for the safety of her children after they have left the house and are on their way to school. Several people, men and women, said that they often pray at small wayside shrines or to Jizō when they encounter such places of worship on walks in the hills. Sometimes they are with others and sometimes by themselves. One man, for example, said he does not pray to the moon or mountains but

if he passes a Buddha in a stone wall (magaibutsu) he will pray to it in the same way as he prays to the images of Buddha in the temples. Similarly, one woman who does not pray to the sun, moon or trees says that she will always (kanarazu - 'without fail') pray to a Jizō which she passes, praying for her children to grow up healthily. She began to pray more like that after her first child was hospitalised for a while because he would not drink his milk as a baby and became "very weak".

Fortune-telling is often a corporate activity, the diviner consulted by a group of friends out together or by a courting couple, but it can also be an individual activity practised by either men or women. The presence of the diviner does involve a second person in some types of divination, but even this is no longer the case for astrology or palmistry done by computer, consultation of printed horoscope books or mikujis or trying to work out an auspicious name by oneself using a seimeihandan book. In a similar category to this is the occurrence of premonitions and significant dreams. The examples given by Mrs. Kosaka have been given already in Chapter 13. Similar phenomena were reported by Mr. Yoshioka, the Nissei 'amateur medium', whose parents both died natural deaths at different times but he claims that about two weeks before each of them died he knew the date of their deaths. He also says that about three or four days after the birth of his eldest son, he had a dream in which he saw the kanji of the name he then bestowed on his son, interpreting this as a revelation from the spirit world or kami.(8) Presumably the question of what to call his son had been on his mind in any case; he says he had not prayed specifically for inspiration about this matter, but as he prays daily at his Kamidana and Butsudan anyway he still interpreted it as divine guidance of some sort.

---

(8) He called his son Sōjū (宗 十).

Wöss (1982: 9) mentions that many old people, especially those living alone, visit temples by themselves because they are lonely and often hope to find there others with whom they can talk. Often grave visits are performed by individuals rather than families, such as the one conducted by Dr. Satō described in Chapter 3.(9) Yakudoshi shrine visits are often family affairs but may be undertaken also alone by the individual concerned. All these examples show that individual religious acts or experiences are very common, and they can not be fitted into a Durkheimian theoretical frame. In fact, as traditional Shinto matsuri as foci of group activities tend to fall into decline, if the group activities of the 'new religious' do not take their place it may well be that individual forms of religious action will begin to assume an increasingly greater role in the religious life of Japanese people generally.

---

(9) In fact he was accompanied by the anthropologist, but otherwise he would have gone alone.

6. The Nature of 'Religion'

If 'religion' is not simply a 'social' phenomenon but also, perhaps increasingly, individual, what then is 'religion'? In the Introduction an 'etic' definition of religion was proposed which did not necessarily involve a belief in 'gods' as such but revised Tylor's definition to include a more general 'spiritual' plane. Following Geertz, this 'spiritual' level was given a 'definition' as that which included some aspects of superhuman power, knowledge (or wisdom perhaps) and ethical standards. One or more aspects may be emphasised in any particular religious system, perhaps almost to the exclusion of the remaining aspects or aspect, but if Geertz is right in his analysis all these need to be found in any religious system 'which hopes to survive'.

At a 'practical' level, however, these three aspects may be derived from what appear to be conceptually different religious traditions. Hardly anything has been written in the foregoing chapters regarding Confucianism but its ethical values are said to permeate many facets of Japanese life to such an extent that they are often regarded as 'Japanese' without being recognised as 'Confucian' (cf., for example, Moeran n.d. or Reischauer 1977: 214,224). This may be so; the present author's only question is whether there were any 'pre-Confucian' values which were congruent with what Confucius taught and which permitted the assimilation of his teachings so easily (as McMullen 1983: 358 suggests), just as some indigenous practices at New Year may have facilitated the widespread adoption of some Christmas customs - but not of others. In discussing 'values' one begins to touch on underlying 'motivations' which can be manifested in a variety of forms, and ethical attitudes are probably included among these. Considerations of space and time have meant that a consideration of ethical values has had to be omitted from the present

work, but they are by no means unimportant for a full understanding of religion. Rather, they constitute the 'third leg of the stool' which has been constructed by the present 'etic' definition of the 'spiritual' as contstituting at least three planes - those of power, knowledge (or wisdom) and morality.

However, the very fact that Confucian values or ethics are no longer recognised as 'Confucian' by the majority of the population who adhere to such values means that they are excluded from 'emic' definitions of 'religion'. This provides a certain justification for omitting them from the present work, if only because the Shinto and Buddhist aspects of 'religion' are so much more obvious. The very fact that Confucian values are so embedded in the Japanese consciousness (it seems) does not make the Japanese 'Confucianists' any more than some respect for the ethical values embodied in the Ten Commandments makes Europeans or Americans into Jews or Christians. It remains true, however, that respect for such ethical values is concordant with other religions, social and ethical practices in a society: therefore it is not surprising, for example, to find that a recent Gallup Poll comparison between American, European and Japanese values which asked people which of the Ten Commandments they thought were still fully applicable to them today showed that 79% of Americans, 48% of the British but only 7% of the Japanese considered the injunction "You shall have no other gods before Me" to apply fully to them today. However, whatever Buddhist influences there may be regarding the taking of life in Japan, only 65% of the Japanese as compared to 90% or more of British and Americans considered the command not to kill to apply to them still (Heald 1982).(10) Ethical behaviour

---

(10) The Japanese also ranked considerably lower on many other items, such as those relating to adultery (U.S.A.: 87%, G.B.: 78%, Japan: 47%) and even honouring one's father and mother (90%, 83% and 52% respectively), which is surprising in view of Confucian ideas of filial piety.

is the 'fruit' of a religious life in the ideals of most religions, and as such the degree to which people do live up to even their own ethical standards (let alone other people's) is a valid concern of 'practical' religion, as Southwold (1983: 57-59) has recently argued. (11)

This 'valid concern' will have to be left until a later work, however, for a more detailed discussion of its place in the religious life of the Japanese people. At present the issue at hand concerns the nature of 'religion' as such, rather than the outworkings of the religious sphere in the dimensions of human responses to 'power', 'knowledge' or 'morality'. It is nevertheless clear that in Japan the sphere of 'religion' encompasses and transcends any categorisation into 'religions' such as Shinto, Buddhism or Confucianism. These are all 'emic' labels for different facets of 'religion': Confucianism is largely associated with the 'ethics' aspect of religion, while Shinto and Buddhism both overlap on the 'power' and 'knowledge' dimensions. (12)

According to 'emic' views of 'religion' most Japanese say they are 'not religious' but what this means in practice is that many of these 'non-religious' people practise ancestral rites, possess safety charms and manifest many other 'religious' kinds of behaviour. Therefore the 'emic' view of 'religion' can not be taken as 'meaningful' in practice, although it is possible that it could provide an index for some demarcation

---

(11) Southwold's proposed test of the 'truth' of a religion along the lines of 'by their fruit you shall know them' stands for different versions of the same religion, such as Buddhism, but to compare across religions with different ethical values (such as eating meat, worship of idols and so on) is much more difficult if one judges only by one's own subjective and culturally-biased values, unless one is prepared to hold some values as being moral absolutes of universal validity.

(12) The presence of scriptures in Buddhism may mean it caters more for the 'knowledge' dimension than does Shinto, which is more concerned with the 'power' of the <u>kami</u> than with questions concerning the limits of human knowledge.

between 'active' and 'passive' modes of belief, but then only in certain contexts and for the types of beliefs most associated with such labels (as indicated in the section on the nature of belief). For the most part, professed religious allegiance amounts to a label telling us little more about a person than his or her probable political leanings or the kind of school where he or she was educated (cf. Chapter 2).

The 'etic' definition of religion advocated in the Introduction provides one way of demarcating the sphere of 'religion' from that of 'non-religion', but these two spheres are fused at the deeper level of 'motivations'. It is only when these 'motivations' are brought into a relationship with a recognition of human limitations that a 'religious' sphere becomes distinguishable from other 'non-religious' manifestations of these same motivations. Many life events can 'activate' these 'motivations' in a religious direction by bringing man to recognise the human limits of power, knowledge or morality. One's own limitations are very often brought to the fore by the experience of illness, which generates insecurity about one's health and perhaps insecurity regarding one's fate in an afterlife, so provokes a search for security and answers, often in a religious sphere. In Japan security is also sought in the ownership of one's own home, but the recognition that even that security is flimsy provokes not only the purchase of insurance (required in any case for obtaining a mortgage) but also the purchase of 'supernatural insurance' through jichinsai rites or even the installation of a Kamidana. The two types of insurance are parallel and complementary, and it does not appear to be the case yet that the spread of insurance companies has led to a decline in the use of 'magic', as Thomas (1971: 652-6) has suggested took place in England, after an earlier period in which the two worked in conjunction (ibid., pp 310-312, 652). Many specific social structural features also generate a search for 'religious'

security or 'meaning', the insecurity and relative lack of 'meaning' which comes from not being a chōnan being one example of this. The sexual division of labour and the use of religious locations for leisure purposes are similar facets of society which open up choices regarding participation in the 'religious' versus the 'non-religious' options open to one, and statistical probability alone indicates that some women wanting to find a reference group will choose one of a religious nature from among the range of options available, or that many will occasionally visit shrines, temples or matsuri for 'sightseeing' as a change from the 'non-religious' forms of leisure also available.

Much less choice seems to be available in the domain of work, however. There social pressures from colleagues, expectations of promotion if one conforms to company norms, duties and responsibilities according to one's position in the firm and other factors force people into participation in religious acts whether they particularly want to or not. 'Leisure' generates voluntary religious activities but 'work' can produce some involuntary or reluctant participation in some activities which the actor may consider to be a waste of time. Although company rites have been assigned to the level of 'surface structure' for the sake of the present ordering of chapters, in order to show how different 'motivations' come together on the 'surface', in another sense they complement 'leisure' as two sides of the same coin. 'Leisure' also is very close to the 'surface' of religious behaviour, more so than birth order for example, so the simple tripartite division into 'motivations', 'transformations' and 'surface structures', while useful as a preliminary level of analysis, may need to be seen more as a system of layers which are intermeshed with each other to some extent. Some layers clearly lie closer to the 'bottom' and others nearer the 'top' but the strata are found to be convoluted and eroded by outside forces (from the social structure) so

that 'outcrops' of 'lower' strata may be found on the surface and 'higher' strata may become semi-buried in the folds of another stratum. To push the geological analogy further, the levels of 'motivations', 'transformations' and 'surface structures' may correspond to 'larger' blocks of geological time (the Palaeozoic, Mesozoic and Cenozoic eras) within which there are further demarcated periods: to a large extent the rocks formed first are then used to produce later strata, so that fossils and minerals taken from an earlier stratum are sometimes found incorporated intact into a later stratum (providing a clue as to the origins of the later stratum) but more usually the constituent materials are so re-arranged that often the new rock looks so unlike the old one that its source in the older rock is only detectable by close investigation. So it is with the present study of Japanese religion. In analysing the different strata one needs to take both a 'synchronic' and a 'diachronic' approach. The 'synchronic' approach shows the formation of each stratum under its own specific conditions and 'climate' (factory rites, leisure and so on) but the 'diachronic' approach sees where these have come from and on what they rest by digging beneath the surface (or examining outcrops where exposed) to reveal the earlier strata.

To return to the biological analogy of enzymes suggested in the Introduction, there are many 'activators' in Japanese religious life which channel religious attitudes along a variety of pathways. However, in the present study four underlying 'motivations' have been isolated. In a variety of forms and through many transformations these produce a kaleidoscope of impressions on the 'surface'. They in themselves may be reduced to perhaps two more basic forms, however, because it seems as if 'memory' and 'age' are closely fused together and so are 'safety' and 'purity and pollution'. The aspects of 'memory' in memorial rites are in a sense continuations of the concern with 'age' in one's life-cycle, and

there is a structural parallel between the times for hōjis and yakudoshis, as between funeral and birth rites. The two seem to form one continuous system of 'age-memory' which theoretically but not always in practice might be linked also by an idea of increasing respect for older people which is increased even further when one attains the status of an ancestor. Likewise, the interlocking of 'safety' and 'purity and pollution' concepts has been recognised by most anthropologists since the publication of the classic work on the subject by Mary Douglas (1966). What does not fit into one's normal categories becomes 'dirt' or 'dangerous' and becomes the focus of special taboos or ritual action. So in the end we may have reduced the problem to two instead of four basic 'motivations': 'age-memory' and 'purity/pollution - safety'.

Is 'religion' therefore reduced to something which is 'non-religious', which can be classified as something like a 'concern with age-memory' or with 'purity/pollution-safety'? Far from it! This only appears to be the case if one thinks in binary terms of thesis and anti-thesis: if something is not 'A' (religion) it must be 'B' (non-religion) or, conversely, if it is not 'B' then it must be 'A'. Rather, the concept of 'motivation' appears to be a synthesis ('C') if one looks from the 'outside in', and is neither 'A' nor 'B', nor is it 'not A' nor 'not B'; it is 'C'. Looking from the 'inside out', however, it is seen to be not yet differentiated into 'A' and 'B'. This differentiation comes from its relationship with the 'spiritual' level, which is viewed as external to, altogether outside, the analysis of 'motivations'. It is often by a recognition of one's own limitations that a recognition of a need for a relationship of some sort with the 'spiritual' becomes apparent. Such recognition often comes about through events lacking predictability or security. It is when all else is shakeable or removable, insecure and unpredictable, that one might then seek a level of reality which is unshakeable and which remains for eternity.

GLOSSARY

Aisatsu	Greetings.
Amae	Feeling of dependency.
Amaeru	To depend upon or presume upon another.
Amido	Fly-screen.
Anzan	Safe birth.
Anzen	Safety.
Ataru	'To fit; hit the mark' (in fortune-telling context).
Atoyaku	The year after a main yakudoshi.
Bachi	'Supernatural punishment'.
Bake	(normally bakemono or o-bake) A ghost.
Bōgenbyō	'Illness from (unnatural) mothering'.
Bon	Period when the ancestors are said to return, in mid-August.
Bōnenkai	End of year party.
Buchō	Departmental manager.
Burakumin	An 'outcaste' minority group.
Butsudan	Buddhist ancestral altar.
Butsumetsu	An inauspicious day.
Chimaki	Charm thrown from floats in some festivals.
Chōnan	Eldest son.
Chūgen	Mid-year gifts.
Daian	An auspicious day. (=Taian)
Daidokoro	The kitchen.
Dokudami	Plant used for some (folk) medical purposes.
Dōnen	Same-age group (or 'similar-age' group).
Dōsei	Unmarried couple living together.
Edo Period	1603 – 1868.
Ema	Prayer plaques at shrines.
Engi	Omen.

Engi o katsugu	'To be superstitious'.
Fuda	Talisman, especially one put on a wall.
Fudō	God of fire.
Fujō	Pollution; unclean.
Furoshiki	Square of cloth used for wrapping or carrying things.
Furusato	One's place of origin, native village.
Futon	Mattress or quilt; bedding.
Genkan	Entranceway to a house.
Gimu	Duty.
Giri	Socially contracted obligation.
Giri-ninjō	Balancing of duties or obligations with 'human feelings'.
Gomagi	Wooden prayer plaques which are later burnt.
Gomi	Rubbish, waste, refuse.
Gyōretsu	Procession in a Shinto festival.
Hanami	Cherry-blossom viewing.
Harai	(normally o-harai): ritual purification.
Hara	Stomach, abdomen.
Hara-obi	Waist-sash.
Hare	Auspicious ritual occasion.
Haregi	Clothes worn on a hare occasion.
Hatsu-	'First', as in Hatsu-miyamairi (first shrine visit for an infant) or Hatsu-Fudō (first visit of year to Fudō temple).
Hatsu-uma sai	Festival on the 'first day of the horse' after Setsubun.
Heian Period	794 – 1185.
Heso	The navel.
Heso no o	Umbilical cord.
Higan	Equinox (Spring or Autumn): A time for grave rites.
Hi no tama	A 'fireball', sometimes equated with ghosts.

Hitaki	(Usually o-hitaki): a Shinto rite performed in November.
Hōji	Periodic memorial rite.
Honne	One's real thoughts and inner feelings.
Honyaku	Main yakudoshi year.
Hotoke	Ancestors or Buddhas.
Hōza	'Counselling session' in some new religions.
Hozo	Navel (same as heso).
Ihai	Memorial tablets.
Iki-wakare	'Parting while still alive'.
Ikujinikki	Diary of a child's development.
Inari	Fox god.
Itadakimasu	Word said to commence a meal: "I humbly receive".
Jichikai	Neighbourhood association.
Jichinsai	Rite to appease god of locality before commencing construction of a new building.
Jingū	A large Shinto shrine.
Jinja	An ordinary Shinto shrine.
Jizō	Children's god (in particular).
Jizō Bon	Festival for Jizō, on 24th August.
Jō	Purity; ritual purity.
Jōbutsu	Attainment of Buddhahood.
Kachō	Section Manager.
Kado	Corner as seen from the outside.
Kadomatsu	New Year pine decorations on gatepost.
Kagami	Mirror.
Kagami-biraki	Rite of 'splitting the mirror' (rice-cake).
Kagami-mochi	Rice-cake shaped like an ancient mirror.
Kaisha	Company.
Kaishain	Company employee.
Kaimyō	Posthumous name.

Kakarichō	Middle management; 'chief clerk'.
Kakeibo	Household accounts book.
Kakochō	'Book of the past'; death register.
Kami	Gods, Shinto deities.
Kamidana	Shinto god-shelf.
Kanai anzen	Safety in the home.
Kanji	Chinese characters.
Kankonsōsai	'Rites of passage'.
Kasō	Direction-lore.
Ke	'Normal' state (in ritual terms).
Kegare	Ritually polluted state.
Kejime	A 'distinction'.
Kettō	Stock; blood; lineage.
Kikime	Efficacy; effectiveness.
Kimochi	Feelings.
Kimon	'Devil - door'.
Kinen	A commemoration.
Kinen shashin	Commemorative photographs.
Kitōshi	Shaman; faith-healer.
Kiyasume	Easing of one's mind.
Kō	Pilgrimage association.
Ko-shōgatsu	'Little New Year' (15th January).
Kōhai	One's junior (in a hierarchy).
Kokkuri-san	Equivalent of Ouija boards.
Konnichi wa	"Good morning" or "Good afternoon". (Standard greeting).
Koyomi	Almanac.
Ku	Word for 'nine', associated with Kurushimi, 'suffering'.
Kugiri	A 'stage' or 'pause'.
Kyōshū	Nostalgia; homesickness.

Maeyaku	Year before one's main yakudoshi.
Maitsuki meinichi	Monthly death day.
Mamori	Safety charm.
Manju	Bean-jam cake.
Matsuri	Shinto festival.
Medetai	'Celebratory'; auspicious; happy.
Meibutsu	Items for which an area is famous.
Meiji Period	1868 – 1912.
Meinichi	(Monthly or annual) death day: cf. also go-meinichi, the monthly date for worshipping a particular god.
Meishi	Name-card.
Mezurashii mono	'Unusual items'.
Mikan-maki	'Peeling a satsuma'.
Miko	Female assistant in a Shinto shrine.
Mikoshi	Portable shrine used in festivals.
Mikuji	Type of divination at Shinto shrines.
Mimai	Visiting a sick person.
Miyage	Visiting gift.
Miuchi	One's family, kin, 'inner circle'.
Mochi	Rice-cake.
Monooki	Store-house.
Mubyō sokusai	'A perfect state of health'.
Muenbotoke	'Unattached spirits'.
Muromachi Period	1392 – 1568.
Natsukashii	Nostalgic.
Nenchūgyōji	Annual ceremonial events.
Nenki	Occasion for period memorial rites.
Nikki	A diary.
Ninjō	'Human feelings'.
Noren	Hanging curtain in entrance to building.
Nōryōsai	'Cool of the evening' festival.

Obi	Sash.
Ochazuke	Left-over rice mixed with tea.
Ōgata gomi	'Large rubbish'.
Ōharai	'Great Purification'.
Ohayō gozamaimasu	"Good Morning".
Omote	The front; the face.
Ōmotokyō	A Shinto-derived new religion.
Pachinko	Pin-ball (parlour).
Rei (i)	Bow; worship.
Rei (ii)	Thanks.
Rei (iii)	Spirit; soul (cf. Reikon).
Reikon	Soul, spirit, ghost.
Riyaku	(In go-riyaku): Effectiveness.
Saidan	Altar.
Sakaki	Shinto sacred plant.
Sake	Rice-wine.
Sarariiman	'Salaryman'; white-collar employee.
Sechiryōri	(normally with honorific 'o-'): New Year foods.
Segaki	Rite to feed hungry spirits.
Sei	'Sacred'.
Seibo	End of year gifts.
Seichō no Ie	A 'new religion'.
Seijin no hi	Adults' Day.
Seimeihandan	Name-divination.
Seinengappi	One's date of birth.
Seiri kyūka	Holiday for menstruating women.
Seishin	Mind; spirit; will; mainly referring to mental states.
Seizō	Production.
Sekihan	Rice boiled with red beans.

Senbetsu	A gift to one going on a journey.
Senpai	A senior (in a hierarchy).
Senzo	Ancestor.
Setsubun	Last day of Winter by old lunar calendar.
Shakai	Society.
Shataku	Company housing.
Shi (i)	Death.
Shi (ii)	The number four.
Shigo no sekai	'Life after death'.
Shikata ga nai	"It can't be helped".
Shikimi	Plant used in Buddhist rites.
Shini-wakare	Parting at time of someone's death.
Shinkansen	Bullet train.
Shinkō	Faith.
Shintai	'Body of the kami' in a Shinto shrine.
Shiyakusho	'City office': Town Hall.
Shō ga nai	"It can't be helped".
Shōtsuki meinichi	Annual death-day.
Shōwa Period	1926 to Present-day.
Shūkan	Custom.
Shūkyō	Religion.
Shunin	Foreman.
Shu-uma sai	'Last Day of Horse'; Autumn parallel to Hatsu-uma sai.
Sōbetsukai	Farewell party.
Sōka Gakkai	A militant Buddhist new religion.
Soto	Outside.
Sumi	Indian ink; an ink stick.
Ta no kami	God of the rice field.
Taian	An auspicious day.
Taisha	A large shrine.

Tama	Ball; sphere; spirit (cf. Tamashii).
Tamashii	Spirit; soul.
Tanabata	'Festival of the Celestial Lovers' (7th August).
Tanuki	A 'raccoon dog'; a kind of beaver/badger.
Tatami	Straw matting.
Tatemae	External appearances.
Tenpura	Fried vegetables or fish in batter.
Tenrikyō	A Shinto-derived 'new religion'.
Tōba	Large memorial plaque.
Tokonoma	Formal alcove in formal room.
Tomobiki	A day 'unlucky for funerals'.
Torii	The entrance portal to a Shinto shrine.
Tsūkagirei	Rites of Passage.
Tsukiai	Friendships, association, acquaintances.
Uchi	Inside; interior.
Ujigami	Tutelary deity.
Unmei	Fate; destiny.
Unseihandan	A kind of fortune-telling.
Ura	Back; behind.
Yakubarai	'Exorcism'; Ritual Purification.
Yakudoshi	'Calamitous year'.
Yakuyoke	A charm against misfortune.
Yama no kami	The god of the mountain.
Yashiro	A small Shinto shrine; the dwelling-place of a deity.
Yome	Daughter-in-law.
Yorishiro	A vessel to contain a kami: same as yashiro.
Yōshi	Adopted son-in-law.
Zadankai	A Sōka Gakkai meeting.
Zoku	'Profane'.
Zushi	A 'quasi-Butsudan'.

BIBLIOGRAPHY

Abbreviations

A.A. = American Anthropologist

J.J.R.S. = Japanese Journal of Religious Studies

K.E.J. = Kodansha Encyclopedia of Japan (Published by Kodansha, Tokyo and New York, 1983).

S.W.J.A. = Southwestern Journal of Anthropology

Abegglen, James C. (1975) 'Management and Worker: the Japanese Solution'. Sophia University, Tokyo, in co-operation with Kodansha International Ltd., Tokyo, New York, San Francisco. (An 'expanded and updated edition of "The Japanese Factory", 1973').

Acquaviva, S.S. (1979) 'The Decline of the Sacred in Industrial Society'; Basil Blackwell, Oxford.

Agency for Cultural Affairs (1972) 'Japanese Religion'; Kodansha International Ltd., Tokyo, New York, San Francisco.

Akaike, N. (1976) 'Festival and Neighbourhood Association' in J.J.R.S. Vol. 3/2-3; June-September 1976.

Allport, G.W. (1935) 'Attitudes' in Murchison, C. (ed.) 'A Handbook of Social Psychology'; Worchester, Massachusetts, U.S.A. (pp.798-844).

Anesaki, Masaharu (1963) 'History of Japanese Religion'; Kegan Paul, Trench, Trubner and Co., London.

Anesaki, Masaharu (1970) 'Religious Life of the Japanese People'; Kokusai Bunka Shinkokai, Tokyo.

Aston, W.G. (1974) 'Shinto. (The Way of the Gods)'; Krishna Press, New York.

Basabe, Fernando M. (1968) 'Religious Attitudes of Japanese Men'; Sophia University, Tokyo.

Beardsley, R.K., Hall, J.W., and Ward, R.E. (1959) 'Village Japan'; University of Chicago Press, Chicago and London.

Befu, Harumi (1971) 'Japan: An Anthropological Introduction'; Chandler Publishing Company, San Francisco and London.

Befu, Harumi (1974) 'Gift-giving in a modernizing Japan'; in Takie Sugiyama Lebra and William P. Lebra (eds.) 'Japanese Culture and Behaviour'; The University Press of Hawaii, Honolulu.

Befu, Harumi (1980) 'The group model of Japanese society and an alternative' in 'Rice University Studies', Vol. 66 No. 1, Rice University, Houston, Texas.

Ben-Ari, Eyal (1982) 'Little Exit, Tempered Voices and the Search for Fulfillment: Industrial Friction in Japan'; Page references to author's manuscript: I do not know of this paper having yet been published.

Ben-Ari, Eyal (1984) 'Community Action and Community Care in present-day Japan: A Study of two communities'; Unpublished Ph.D. thesis, The University of Cambridge.

Benedict, Ruth (1946) 'The Chrysanthemum and the Sword'; Houghton Mifflin Publishers, Boston.

Bennett, John W. (1948) 'The Interpretation of Pueblo Culture'; A Question of Values' in S.J.A., Vol. 2, pp.672-689.

Bennett, John W. and Ishino, Iwao (1963) 'Paternalism in the Japanese Economy'; University of Minnesota Press, Minneapolis.

Blumenthal, Tuvia (1970) 'Saving in Postwar Japan'; Harvard East Asian Monographs, Harvard University Press, Cambridge, Massachusetts.

Binns, Christopher A.P. (1979 and 1980) 'The changing face of power, revolution and accommodation in the development of the Soviet ceremonial system'; Part I in 'Man' Vol. 14, pp.585-606 and Part II in 'Man' Vol. 15, pp.170-187.

Blacker, C. (1975) 'The Catalpa Bow'; George Allen and Unwin Ltd., London.

Bownas, Geoffrey (1963) 'Japanese Rainmaking and Other Folk Practices'; George Allen & Unwin Ltd., London.

Brannen, Noah S. (1968) 'Sōka Gakkai: Japan's Militant Buddhism'; John Knox Press, Richmond, Virginia, U.S.A.

Brooks, Anne Page (1981) 'Mizuko Kuyō and Japanese Buddhism' in J.J.R.S. Vol. 8 Nos. 3/4 pp.119-147.

Bunce, William K. (1955, 1973) 'Religions in Japan'; Tuttle; Rutland, Vermont & Tokyo, Japan.

Burgess, Robert G. (1984) 'In the Field: An Introduction to Field Research'; George Allen and Unwin, London.

Burridge, Kenelm (1969) 'New Heaven, New Earth'; Basil Blackwell, Oxford.

Caudill, W. (1976) 'Everyday Health and Illness in Japan and America' in Charles Leslie (ed.) 'Asian Medical Systems'; University of California Press, Berkeley and Los Angeles.

Caudill, W. and Plath, D. (1974) 'Who Sleeps by Whom? Parent-child Involvement in Urban Japanese Families' in Takie Sugiyama Lebra and William P. Lebra (eds.) 'Japanese Culture and Behavior'; University Press of Hawaii, Honolulu.

Caudill, W. and Weinstein, H. (1969? 'Maternal care and infant behaviour in Japan and America'; in 'Psychiatry', Vol. 32, pp.12-43.

Chomsky, Noam (1965) 'Aspects of the Theory of Syntax'; M.I.T. Press, Cambridge, Mass., U.S.A.

Clark, Rodney (1979) 'The Japanese company'; Yale University Press, Hew Haven, London.

Cole, Allan B., Totten, George O. and Uyehara, Cecil H. (1966) 'Socialist Parties in Postwar Japan'; Yale University Press.

Cole, Robert E. (1971) 'Japanese Blue Collar: The Changing Tradition'; University of California Press, Berkeley, London.

Connor, J.W. (1977) 'Tradition and Change in Three Generations of Japanese Americans'; Nelson-Hall Publishers, Chicago.

Cooper, Michael (1983) Article on 'Christianity' in K.E.J. Vol. 1, pp.306-310.

Craig, Albert M. (1975) 'Functional and Dysfunctional aspects of Government Bureaucracy' in Ezra F. Vogel (ed.) 'Modern Japanese Organization and Decision-Making'; Tuttle, Tokyo.

Czaja, M. (1974) 'Gods of Myth and Stone'; Weatherhill Publishers, New York.

Dale, K.J. (1975) 'Circle of Harmony: A Case Study in popular Japanese Buddhism'; William Carey Library, South Pasadena, California.

Davis, W. (1980) 'Dojo: Magic and Exorcism in Modern Japan'; Stanford University Press, Stanford, California.

De Vos, George (1974) 'The Relation of Guilt toward Parents to Achievement and Arranged Marriage among the Japanese' in Takie Sugiyama Lebra and William P. Lebra (eds.) 'Japanese Culture and Behavior'; The University Press of Hawaii, Honolulu.

De Vos, George A. (1975) 'Apprenticeship and Paternalism' in Ezra F. Vogel (ed.) 'Modern Japanese Organization and Decision-Making'; Charles E. Tuttle Co., Tokyo.

De Vos, George and Wagatsuma, Horoshi (1966) 'Japan's Invisible Race'; University of California Press, Berkeley, Los Angeles and London.

Doi, Takeo (1973) 'The Anatomy of Dependence'; Kodansha International Ltd., Tokyo, New York and San Francisco.

Doi, Takeo (1974) 'Amae: A Key Concept for Understanding Japanese personality Structure' in Takie Sugiyama Lebra and William P. Lebra (eds.) 'Japanese Culture and Behavior', The University Press of Hawaii, Honolulu.

Dore, Ronald P. (1958) 'City Life in Japan: A Study of a Tokyo Ward'; University of California Press, Berkeley.

Dore, Ronald P. (1959) 'Land Reform in Japan'; Oxford University Press, London, New York, Toronto.

Dore, Ronald P. (1965) 'The Legacy of Tokugawa Education' in Marius B. Jansen (ed.) 'Changing Japanese Attitudes toward Modernization'; Princeton University Press, Princeton, New Jersey.

Dore, Ronald P. (1973) 'British Factory, Japanese Factory'; University of California Press, Berkeley.

Dore, Ronald P. (1976) 'The Diploma Disease'; George Allen and Unwin Ltd., London.

Dore, Ronald P. (1978) 'Shinohata: A portrait of a Japanese village'; Allen Lane, London.

Dore, Ronald P. (1982) Introduction to Kamata (1982), 'Japan in the Passing Lane', Pantheon Books, New York.

Douglas, Mary (1966) 'Purity and Danger, an analysis of concepts of pollution and taboo'; Routledge and Kegan Paul, London.

Durkheim, Emile (1918) 'The Elementary Forms of the Religious Life', translated by Joseph W. Swain; George Allen and Unwin Ltd., London.

Eames, Edwin and Goode, Judith (1977) 'Anthropology of the City'; Prentice-Hall Publishers, Engle wood Cliffs, New Jersey.

Earhart, H.B. (1970) 'A Religious Study of the Mount Haguro Sect of Shugendo'; Sophia University, Tokyo.

Earhart, H.B. (1974) 'Japanese Religion: Unity and Diversity'; Dickenson Publishing Co., Inc., California.

Embree, J.F. (1946) 'A Japanese Village, Suye Mura'; International Library of Sociology and Social Reconstruction, Kegan Paul, London.

Evans-Pritchard, E.E. (1937) 'Witchcraft, oracles and magic among the Azande'; Clarendon Press, Oxford.

Evans-Pritchard, E.E. (1940) 'The Nuer', Clarendon Press, Oxford.

Evans-Prithcard, E.E. (1951) 'Social Anthropology'; Cohen and West Ltd., London.

Evans-Pritchard, E.E. (1956) 'Nuer Religion'; Clarendon Press, Oxford.

Evans-Pritchard, E.E. (1962) 'Essays in Social Anthropology'; Faber and Faber, London.

Evans-Pritchard, E.E. (1965) 'Theories of Primitive Religion'; Clarendon Press, Oxford.

Fukutake, Tadashi (1967) 'Japanese Rural Society'; Oxford University Press, London, New York, Tokyo.

Fujita, Tomio (1983a) Article on 'Jikkan Jūnishi' in K.E.J., Vol. 4, pp.55-7.

Fujita, Tomio (1983b) Article on 'sacred, the' in K.E.J., Vol. 6, pp.361-2.

Geertz, Clifford (1973) 'The Interpretation of Cultures: selected essays'; Basic Books Inc., New York.

Gerth, H.H. and Mills, C.W. (1957) 'From Max Weber: essays in Sociology'; Routledge and Kegan Paul, London (Third impression, 1957: first published 1948).

Gibney, Frank (1975) 'Japan: The Fragile Superpower'; Tuttle, Tokyo.

Goldenweiser, A. (1975) Review: 'Émile Durkheim - Les Formes élémentaires de la vie religieuse. Le système totémique en Australie 1912' A.A., Vol. 17, pp.719-35 (1915), reproduced in W.S.F. Pickering (1975) 'Durkheim on Religion'; Routledge and Kegan Paul, London.

Goode, William J. (1963) 'World Revolution and Family Patterns'; The Free Press, New York, and Collier-Macmillan Limited, London.

Goody, Jack (1961) 'Religion and Ritual: The Definition Problem' in 'British Journal of Psychology' Vol. 12, pp.143-164.

Graburn, N. (1983) 'To pray, pay and play: The cultural structure of Japanese domestic tourism'. Centre des Hautes Etudes Touristiques, Serie B, No. 26.

Haak, Ronald Otto (1973) 'Nishijin Weavers: The Functions of Tradition in Modern Japanese Society'; Department of Anthropology Ph.D. thesis, the University of Illinois at Urbana-Champaign.

Hakeda, Yoshito (1983) Article on 'Kūkai' in the Kodansha Encyclopedia of Japan, Vol. 4, p.304. Kodansha, Tokyo and New York.

Hashimoto, Tatsumi (1962) 'Ancestor Worship and Japanese Daily Life', Translated by Percy T. Luke; World of Life Press, Tokyo.

Hanley, Susan and Yamamura, Kozo (1977) 'Economic and Demographic Change in Preindustrial Japan, 1600-1869'; Princeton University Press.

Heald, Gordon (1982) 'A Comparison between American, European and Japanese Values'; Paper presented to the Annual Meeting of the World Association for Public Opinion Research, Hunt Valley, Maryland, U.S.A. and also at the 6th Annual 'Consultation on Implicit Religion', Denton Hall, Ilkley, May 1983.

Hendry, Joy (1981) 'Marriage in Changing Japan'; Croom Helm, London.

Hepburn, J.C. (1867) 'A Japanese and English Dictionary', American Presbyterian Mission Press, Shanghai.

Herbert, Jean (1967) 'Shinto at the fountain-head of Japan'; George Allen and Unwin Ltd., London.

Hick, John (1963, 1973) 'Philosophy of Religion' (second edition); Prentice-Hall, Inc., Englewood Cliffs, New Jersey.

Holtom, D.C. (1938) 'The National Faith of Japan'; Kegan Paul, Trench, Trubner and Co., London.

Honigmann, John J. (1976) 'The Development of Anthropological Ideas'; The Dorsey Press, Homewood, Illinois.

Hori, Ichiro (1968) 'Folk Religion in Japan'; University of Chicago Press, Chicago and London.

Hori, Ichiro (1975) 'Shamanism in Japan' in J.J.R.S., Vol. 2, No. 4.

Hoshino, Eiki (1983) Article on 'Kegare' in K.E.J., Vol. 4, p.186.

Hubert, Henri and Mauss, Marcel (1964) 'Sacrifice: its nature and function'; Cohen and West, London.

Ikado, Fujio (1968) 'Trend and Problems of New Religions: Religion in Urban Society' in Morioka, K. and Newell, W.H. (eds.) 'The Sociology of Japanese Religion'; E.J. Brill, Leiden.

Ike, Nobutaka (1972) 'Japanese Politics'; 2nd edition, Alfred A. Knopf, New York.

Ikeda, Yoshiko (1974) 'Parental Attitude toward Twins in Japan' in Takie Sugiyama Lebra and William P. Lebra (eds.) 'Japanese Culture and Behavior'; The University Press of Hawaii, Honolulu.

Inokuchi, Shōji (1983a) Article on 'Moon Viewing' in K.E.J., Vol. 5, p.248.

Inokuchi, Shōji (1983b) Article on 'Daruma fairs' in K.E.J., Vol. 2, pp.77-8.

Itō, Mikiharu (1983a) Article on 'Agricultural rites' in K.E.J., Vol. 1, pp.22-3.

Itō, Mikiharu (1983b) Article on 'festivals: Matsuri' in K.E.J., Vol. 2, pp.252-8.

Iwata, Keiji (1979) 'Kami no Jinruigaku; Kōdansha, Tokyo.

Janeira, Armando Martins (1970) 'Japanese and Western Literature: A Comparative Study'; Tuttle; Rutland, Vermont & Tokyo, Japan.

Jones, Mervyn (1967) Chapter on 'Freemasonry' in Norman MacKenzie (ed.) 'Secret Societies'; Aldus Books, London.

Kamata, Satoshi (1982) 'Japan in the Passing Lane'; Pantheon Books, New York.

Kasahara, Yomishi (1974) 'Fear of Eye-to-Eye Confrontation among Neurotic Patients in Japan' in Lebra, T.S. and Lebra, W.P. (eds.) (1974) 'Japanese Culture and Behavior'; The University Press of Hawaii, Honolulu.

Keene, Donald (1971) 'Appreciations of Japanese Culture'; Kodansha International Ltd., Tokyo, New York, San Francisco.

Kenkyusha's New Japanese-English Dictionary (1954), Kenkyusha, Tokyo, Japan.

Kerblay, Basile (1983) 'Modern Soviet Society'; Methuen, London.

Kimura, Masanori (1983) 'Nikki Bungaku' in K.E.J., Vol. 6, p.2.

Kinoshita, Ritsuko (1983) 'Ōkoku no Tsumatachi'; Komichi Shobō, Tokyo.

Kitagawa, Joseph M. (1966) 'Religion in Japanese History'; Columbia University Press, New York and London.

Komiya Ryūtarō (1966) 'The Supply of Personal Savings' in Komiya, R. (ed.) 'Postwar Economic Growth in Japan'; (Translated by Robert S. Ozaki); University of California Press, Berkeley and Los Angeles.

Leach, Edmund (ed.) (1968) 'Dialectic in Practical Religion'; Cambridge Papers in Social Anthropology No. 5, Cambridge University Press.

Leach, Edmund (1976) 'Culture and Communication'; Cambridge University Press.

Lebra, Takie Sugiyama and Lebra, William P., (1974) 'Japanese Culture and Behavior'; The University Press of Hawaii, Honolulu.

Lebra, Takie Sugiyama (1976) 'Japanese Patterns of Behavior'; The University Press of Hawaii, Honolulu.

Lebra, W.P. (1966) 'Okinawan Religion: belief, ritual and social structure'; University of Hawaii Press, Honolulu.

Lee, Changsoo and De Vos, George (1981) 'Koreans in Japan: Ethnic Conflict and Accommodation'; University of California Press, Berkeley, Los Angeles, London.

Levi-Strauss, Claude (1963) 'Structural Anthropology'; Basic Books Inc., New York and London.

Lewis, D.C. (1980) 'An Anthropological Comparison of Tokugawa Japan to 'Feudal' Outer Mongolia, with regard to some pre-conditions for urbanisation'; Unpublished M.A. (Econ.) thesis, the University of Manchester.

Lewis, Oscar (1964) 'The Children of Sanchez; Penguin Modern Classics, Penguin Books, Harmondsworth.

Lewis, Ruth (1984) 'Chrysanthemum Heart' in 'The Japan Times', 30th March 1984, page 10.

Lock, Margaret (1980) 'East Asian Medicine in Urban Japan'; University of California Press, Berkeley.

Lock, Margaret (1983) 'Protests of a Good Wife and Wise Mother: Somatization and Medicalization in Modern Japan'. Prepared for a panel on Health and Illness in Japan, American Anthropological Association Meeting, November 17-20, 1983. Page references from Working draft.

Lock, Margaret (1984) 'Licorice in Leviathan: The Medicalization of Care for the Japanese elderly' in 'Culture, Medicine and Psychiatry', 1984. Page references from original manuscript prior to forthcoming published article.

Mabuchi, T. (1976) 'Optional Cult Group Affiliation among the Puyuma and the Miyako Islanders' in W.H. Newell (ed.) 'Ancestors'; Mouton, The Hague.

Malinowski, Bronislaw (1974) 'Magic, Science and Religion, and other essays'; Souvenir Press, London.

Marsh, Robert M. and Mannari, Hiroshi (1974) 'Modernization and the Japanese factory'; Princeton University Press, Princeton.

Matsudaira, Narimitsu (1963) 'The Concept of Tamashii in Japan' in Richard M. Dorson (ed.) 'Studies in Japanese Folklore'; Indiana University Press, Bloomington, Indiana.

Matsumoto, H. (1982) Paper on 'The Evolution of land and urban policies in Japan', presented at the 'International Seminar on Urban Development Policies', Nagoya, October, 1982.

Matsumoto, Y. Scott (1963) 'Notes on Primogeniture in Postwar Japan'; in Robert J. Smith and Richard K. Beardsley (eds.) 'Japanese Culture: Its Development and Characteristics'; Methuen and Company Ltd., London.

Matsuzono, M. (1976) ' A Note on the Enshrinement of Ancestral Tablets at Zamami Island, Okinawa', in W.H. Newell (ed.) 'Ancestors'; Mouton, The Hague.

Mauss, Marcel (1972) 'A General Theory of Magic'; W.W. Norton and Company, Inc., New York.

McFarland, H.N. (1967) 'The Rush Hour of the Gods'; The Macmillan Company, New York.

McKean, Margaret A. (1981) 'Environmental Protest and Citizen Politics in Japan'; University of California Press, Berkeley, Los Angeles, London.

McMullen, James (1983) article on 'Confucianism' in K.E.J., Vol. 1, pp.352-8.

Mitchell, Basil (1973) 'The Justification of Religious Belief'; Macmillan, London.

Mitchell, Richard H. (1967) 'The Korean Minority in Japan'; University of California Press, Berkeley and Los Angeles.

Miura, Ayako (1970) 'The Wind is Howling'; Hodder and Stoughton, London.

Moeran, Brian (n.d.) 'Confucian Confusion: The Good, The Bad and the Noodle Western': I do not know if or where this manuscript has been published.

Moeran, Brian (1984) 'Individual, Group and Seishin - Japan's internal cultural debate' in 'Man', Vol. 19, No. 2, June 1984.

Mogami, Takayoshi (1963) 'The Double-Grave System' in Richard M. Dorson (ed.) 'Studies in Japanese Folklore'; Indiana University Press, Bloomington, Indiana.

Morioka, Kiyomi (1968) 'Religious Behaviour and the Actor's Position in his Household' in Morioka, K. and Newell, W.H. (eds.) 'The Sociology of Japanese Religion'; E.J. Brill, Leiden.

Morioka, Kiyomi (1975) 'Religion in Changing Japanese Society'; University of Tokyo Press, Tokyo.

Morioka, Kiyomi (1981) Reports and comments on a religious survey conducted by the Asahi newspaper company, reported in the Asahi Shinbun, Morning edition, 5th May 1981.

Morioka, Kiyomi (1984) 'Ancestor Worship in Contemporary Japan: Continuity and Change', in 'Religion and Family in East Asia'; Senri. Ethnological Studies No. 11; National Museum of Ethnology, Osaka, Japan.

Nagashima, Nobuhiro and Tomoeda, Hiroyasa (1984) 'Regional Differences in Japanese Rural Culture' in Senri Ethnological Studies, No. 14; National Museum of Ethnology, Osaka.

Nakamaki, Hirochika (1983) 'The "Separate" Coexistence of Kami and Hotoke - A Look at Yorishiro' in J.J.R.S., March 1983, Vol. 10, No. 1.

Nakamura, Mitsuo (1969) 'Contemporary Japanese Fiction, 1926-1968'; Kokusai Bunka Shinkokai, (Japan Cultural Society), Tokyo, 1969.

Nakane, Chie (1967) 'Kinship and Economic Organization in rural Japan'; Athlone Press, London.

Nakane, Chie (1970) 'Japanese Society'; Weidenfeld and Nicholson, London.

Namihira, Emiko (1974) 'Nihon Minkan-shinkō to sono kōzō' (A Study of the structure of Japanese Folk Belief) in 'Minzokugaku Kenkyū' Vol. 38, Nos. 3-4, 1974.

Namihira, Emiko (1976) 'Tsūkagirei ni okeru 'hare' to 'kegare' no kannen no bunseki', (An analysis of 'hare' and 'kegare' in Japanese Rites of Passage) in 'Minzokugaku Kenkyū' Vol. 40, No. 4, 1976.

Nelson, A.N. (1966) 'The Modern Reader's Japanese-English character dictionary', revised edition; Charles E. Tuttle Company, Rutland, Vermont & Tokyo, Japan.

Nihon Minzoku Jiten (1971) Nihon Minzoku Jiten, Seibundō Publishers, Tokyo.

Nishihara, S. (1961) 'Studies on the Social Surveys of the Institute of Statistical Mathematics' in Bulletin of the International Statistical Institute', Vol. 38.

Noda, Kesaya (1983) 'A Pilgrimage in Shikoku' in 'Essays on Japanology 1978-1982'; Bunrikaku Publishers, Kyoto.

Noda, Kazuo (1975) 'Big Business Organization' in Ezra F. Vogel (ed.) 'Modern Japanese Organization and Decision-Making'; Tuttle, Tokyo.

Norbeck, Edward (1952) 'Pollution and Taboo in Contemporary Japan' in S.W.J.A., Vol. 8, pp.269-285.

Norbeck, Edward (1953) 'Age-grading in Japan' in A.A., Vol. 55, pp.373-384.

Norbeck, Edward (1954) 'Takashima, A Japanese Fishing Community'; University of Utah Press, Salt Lake City.

Norbeck, Edward (1955) 'Yakudoshi, A Japanese Complex of Supernaturalistic Beliefs' in S.W.J.A., Vol. 11, pp.105-120.

Norbeck, Edward (1970) 'Religion and Society in Modern Japan'; Rice University Studies Vol. 56, No. 1. Rice University, Houston, Texas.

Obeyesekere, Gananath (1968) 'Theodicy, Sin and Salvation in a Sociology of Buddhism' in E.R. Leach (ed.) 'Dialectic in Practical Religion'; Cambridge University Press.

Offner, G.B. and Van Straelen, H. (1963) 'Modern Japanese Religions, with special emphasis upon their doctrines of healing.' Twayne Publishers, Inc., New York.

Ohnuki-Tierney, Emiko (1984) 'Illness and Culture in Contemporary Japan'; Cambridge University Press.

Oka, Hideyuki (1967) 'How to Wrap Five Eggs'; Weatherhill, New York and Tokyo.

Oka, Hideyuki (1975) 'How to Wrap Five More Eggs'; Weatherhill, New York and Tokyo.

O'Neill, P.G. (1973) 'Essential Kanji'; Weatherhill, New York and Tokyo.

Ono, Sokyo (1962) 'Shinto, The Kami Way'; Charles E. Tuttle Company, Rutland, Vermont and Tokyo, Japan.

Ooms, H. (1967) 'The Religion of the Household: a Case Study of Ancestor Worship in Japan' in 'Contemporary Religions in Japan' 8: 201-333.

Ooms, H. (1976) 'A structural analysis of Japanese Ancestral rites and beliefs' in W.H. Newell (ed.) 'Ancestors': Mouton, The Hague.

Oto, Tokihiko (1963) 'Folklore in Japanese Life and Customs'; Kokusai Bunka Shinkokai, Tokyo.

Otto, Rudolf (1928) 'The Idea of the Holy'; Humphrey Milford and Oxford University Press.

Parkin, D. (1976) 'Exchanging words' in B. Kapferer (ed.) 'Transaction and Meaning'; A.S.A. Essays Vol. 1; Philadelphia, U.S.A.

Pensrinukun, Kamon (1984) 'A Thai's Reflections on Hokkaido' in 'The Japan Times', Friday, 30th March, 1984, p.10.

Philippi, Donald L. (1959) 'Norito'; The Institute for Japanese Culture and Classics, Kokugakuin University, Tokyo.

Picken, Stuart D.B. (1980) 'Shinto: Japan's Spiritual Roots'; Kodansha International Ltd., Tokyo, New York, San Francisco.

Plath, David W. (1964) 'Where the Family of God is the Family: The Role of the Dead in Japanese Households', in A.A., Vol. 66, pp.300-317.

Plath, David W. (1969) 'The After Hours'; University of California Press.

Plath, David W. (1974) 'Christmas: A Modern Japanese Festival'; in H. Byron Earhart (ed.) 'Religion in the Japanese experience'; Dickenson Publishing Company Inc., California.

(Reprinted from 'The Japanese Popular Christmas: Coping with Modernity' in the 'Journal of American Folklore', 1963).

Platt, Jennifer (1976) 'Realities of Social Research'; Sussex University Press.

Redfield, Robert (1956) Peasant Society and Culture'; University of Chicago Press.

Reischauer, A.K. (1970) 'Studies in Japanese Buddhism'; A.M.S. Press, New York (First published 1917).

Reischauer, E.O. (1977) 'The Japanese'; Harvard University Press.

Rhodes, Robert (1983) Article on 'Jizō' in K.E.J., Vol. 4, p.66.

Richardson, Bradley M. (1974) 'The Political Culture of Japan'; University of California Press.

Richardson, Don (1981) 'Eternity in their hearts'; Regal Press, Ventura, California.

Robinson, J.C. (1969) 'Okinawa: a people and their gods; Charles E. Tuttle Co., Publishers, Rutland, Vermont and Tokyo, Japan.

Rohlen, T.P. (1974) 'For Harmony and Strength: Japanese white-collar organisation in anthropological perspective'; University of California Press, Berkeley, Los Angeles, London.

Rokeach, Milton (1968) Article on 'Attitudes' in the 'International Encyclopedia of the Social Sciences', Vol. 1; The Macmillan Company and The Free Press, New York.

Runciman, W.G. (1970) 'Sociology in its place, and other essays'; Cambridge University Press.

Russell, Wilmot P.M. (1935) 'A Glimpse of Japan' in 'The National Review', February 1935; 'Published by the proprietors, 18 York Buildings, Adelphi, London'.

Sakamoto, Hiroshi (1983) Article on 'Dog, Japanese' in K.E.J. Vol. 2, pp.124-6.

Sasaki, Kokan (1984) 'Spirit Possession as an Indigenous Religion in Japan and Okinawa' in George De Vos and Takao Sofue (eds.) 'Religion and Family in East Asia'; Senri Ethnological Studies, No. 11, National Museum of Ethnology, Osaka.

Saso, Michael R. (1972) 'Taoism and the Rite of Cosmic Renewal'; Washington State University Press.

Saunders, E. Dale (1964) 'Buddhism in Japan'; University of Pennsylvania Press, Philadelphia.

Scalapino, Robert A. and Masumi, Junnosuke (1962) 'Parties and Politics in Contemporary Japan'; University of California Press.

Schwartz, Morris S. and Schwartz, Charlotte G. (1969) 'Problems in Participant Observation'; in George J. McCull (ed.) 'Issues in Participant Observation'; Addison-Wesley Publishing Co., Reading, Massachusetts, Menlo Park, California, and London.

Segawa, Kiyoko (1963) 'Menstrual Taboos imposed upon women' in Richard M. Dorson (ed.) 'Studies in Japanese Folklore'; Indiana University Press, Bloomington.

Shorter Oxford English Dictionary (1973 edition); Oxford University Press.

Singer, Kurt (1975) 'Mirror, Sword and Jewel'; Kodansha International Ltd., Tokyo, New York, San Francisco (First published by Croom Helm, London, 1973).

Smith, R.J. (1956) 'Kurusu: A Japanese Agricultural Community' in J.B. Cornell and R.J. Smith, 'Two Japanese Villages'; Greenwood Press, New York.

Smith, R.J. (1974) 'Ancestor Worship in contemporary Japan'; Stanford University Press, Stanford, California.

Smith, R.J. 'Kurusu: The price of progress in a Japanese Village'; Dawson Publishers, Folkstone, Kent.

Smith, Thomas C. (1959) 'The Agrarian Origins of Modern Japan'; Stanford University Press, Stanford, California.

Smith, W. Robertson (1927) 'Lectures on the Religion of the Semites' A. and C. Black and Co., London. (first published 1889).

Sofue, Takao (1983) 'Changes in Japanese Culture and Personality after World War II'; Paper presented at the Symposium on 'Japanese Culture and Mental Health' at the East-West Center, Honolulu, Hawaii, August 15-19, 1983.

Sonoda, Minoru (1975) 'The Traditional Festival in Urban Society'; in J.J.R.S., Vol. 2, Nos. 2-3, June-September 1975, pp.103-136.

Southwold, Martin (1978) 'Buddhism and the Definition of Religion' in 'Man' (New Series) Vol. 13, No. 3, pp.362-379.

Southwold, Martin (1979) 'Religious Belief' in 'Man' (New Series), Vol. 14, No. 4, pp.628-644.

Southwold, Martin (1983) 'Buddhism in Life'; Manchester University Press.

Spae, J.J. (1971) 'Japanese Religiosity'; Oriens Institute for Religious Research, Tokyo.

Spae, J.J. (1972) 'Shinto Man'; Oriens Institute for Religious Research, Tokyo.

Steinilber-Oberlin, E. (1938) 'The Buddhist Sects of Japan'; London.

Stoetzel, Jean (1955) 'Without the Chrysanthemum and the Sword'; Heinemann, London.

Suzuki, Yoshio (1980) 'Money and Banking in Contemporary Japan'; Yale University Press, Hew Haven and London.

Takasugi, Ryuji (1978) 'Akachan no nazukejiten' Seitōsha, Tokyo.

Tamaru, Noriyoshi (1979) 'The Problem of Secularization: A Preliminary Analysis' in J.J.R.S., Vol. 6, Nos.1-2, March-June 1979.

Tanaka, Masako (1984) 'Maternal Authority in the Japanese Family' in George De Vos and Takao Sofue (eds.) 'Religion and Family in East Asia'; Senri Ethnological Studies No. 11, National Museum of Ethnology, Osaka.

Tax, Sol, Eiseley, Loren C., Rouse, Irving and Voegelin, Carl F. (1953) 'An Appraisal of Anthropology Today'; The University of Chicago Press.

Thayer, John E. (1983) Article on 'iroha karuta' in K.E.J. Vol. 3, p.332.

Thomas, Edward J. (1949) 'The Life of Buddha, as Legend and History'; Third Edition (Revised); Routledge and Kegan Paul, London.

Thomas, Keith (1971) 'Religion and the Decline of Magic'; Weidenfeld and Nicolson, London.

Thomsen, H. (1963) 'The New Religions of Japan'; Charles E. Tuttle, Vermont and Tokyo.

Towler, Robert (1974) 'Homo Religiosus'; Constable Books, London.

Trudgill, Peter (1974, 1983) 'Sociolinguistics'; Revised edition, Penguin Books, Harmondsworth.

Tsurumi, Kazuko (1970) 'Social change and the individual: Japan before and after defeat in World War II', Princeton University Press, Princeton, New Jersey.

Turner, Victor W. (1969) 'The ritual process'; Routledge and Kegan Paul, London.

Tylor, Edward B. (1973) Primitive Culture, Volume 1; John Murray, London.

Ueda, Makoto (1983) Article on 'Bashō' in K.E.J. Vol. 1, pp.144-5.

Umesao, Tadao and others (1972) 'Nihonbunka to Sekai', Vol. 2, chapter on 'Kamigami no bungyō'; Kōdansha, Tokyo.

Urquhart, Colin (1982) 'Anything You Ask'; Hodder & Stoughton, London.

Van Gennep, Arnold (1960) 'The Rites of Passage', Translated by Monika Vizedom and Gabrielle Caffee; Routledge and Kegan Paul, London.

Videen, Susan Downing (1983) Articles on 'Hyakunin isshu' and 'playing cards' in K.E.J. Vol. 3, pp.248-9, and Vol. 6, p.192.

Vogel,E.F. (1963) 'Japan's New Middle Class'; University of California Press.

Vogel, E.F. (1975) 'Introduction: Toward More Accurate Concepts' in E.F. Vogel (ed.) 'Modern Japanese Organization and Decision-Making'; Tuttle, Tokyo.

Vogel, E.F. (1979) 'Japan as Number One'; Harvard University Press, Cambridge, Massachusetts.

Wagatsuma, Takashi (1983) Article on 'Family Planning' in K.E.J., Vol. 2, pp.246-7.

Weber, Max (1963) 'The Sociology of Religion'; Beacon Press, Boston.

Westney, D.E. and Coleman, S.J. (1983) Article on 'Population' in K.E.J., Vol.6, pp.222-5.

Wheelwright, Carolyn (1983) Article on 'Kakemono' in K.E.J. Vol. 4, p.116.

White, J.W. (1970) 'The Sokagakkai and Mass Society'; Stanford University Press, California.

Wilson, B.R. (1976) 'Aspects of Secularisation in the West' in J.J.R.S. Vol. 3, No. 4; December 1976.

Woronoff, Jon (1982) 'Japan: the coming social crisis'; Lotus Press, Tokyo.

Wöss, Fleur (1982) 'Escape into Death: old people and their wish to die'; Paper presented at the European Association of Japanese Studies conference, The Hague, September 1982.

Yamada, Tokubei (1983) Article on 'Inu hariko' in K.E.J., Vol. 3, p.325.

Yanagita, Kunio (1970) 'About Our Ancestors'; translated by Fanny Hagin Mayer and Yasuyo Ishiwara; Japan Society for the Promotion of Science, Tokyo.

Yoshida, Teigo (1967) 'Mystical retribution, spirit possession, and social structure in a Japanese village' in 'Ethnology' Vol. 6, pp.237-262.

Yoshimori, K. (1979) Seiō Kigyō no Hassō to Kōdō (Principles and Behaviour of West European Business Enterprises); Diamondosha, Tokyo.

Yoshino, Roger and Murakoshi, Sueo (1977) 'The Invisible Visible Minority: Japan's Burakumin'; Buraku Kaiho Kenkyusho, Osaka, Japan.

Yoshino, M.Y. (1975) 'Emerging Japanese Multinational Enterprises' in E.F. Vogel (ed.) 'Modern Japanese Organization and Decision-Making'; Tuttle, Tokyo.

Yuasa, Nobuyuki (1983) Article on 'Issa', in K.E.J., Vol. 3, p.348.